CIEL LIGHT CO., LTD.

PRODUCT SPECIFICATION

Customer:_____

Customer's Model No.:_____

Customer's Drawing No.:_____

Model No.: CL-3043PGC1A-001

Drawing No.:_____

Features

Low Power Consumption

High Efficiency

Rectangular Type

With Flange

Solder Leads Without Stand-off

Compliant With RoHS

ATTENTION

OBSERVE PRECAUTIONS
FOR HANDLING
ELECTROSTATIC
SENSITIVE DEVICES

Descriptions

Chip Material: InGaN/GaN

Emitting Color: Pure Green

Lens Color: Water Clear

Outline Drawing

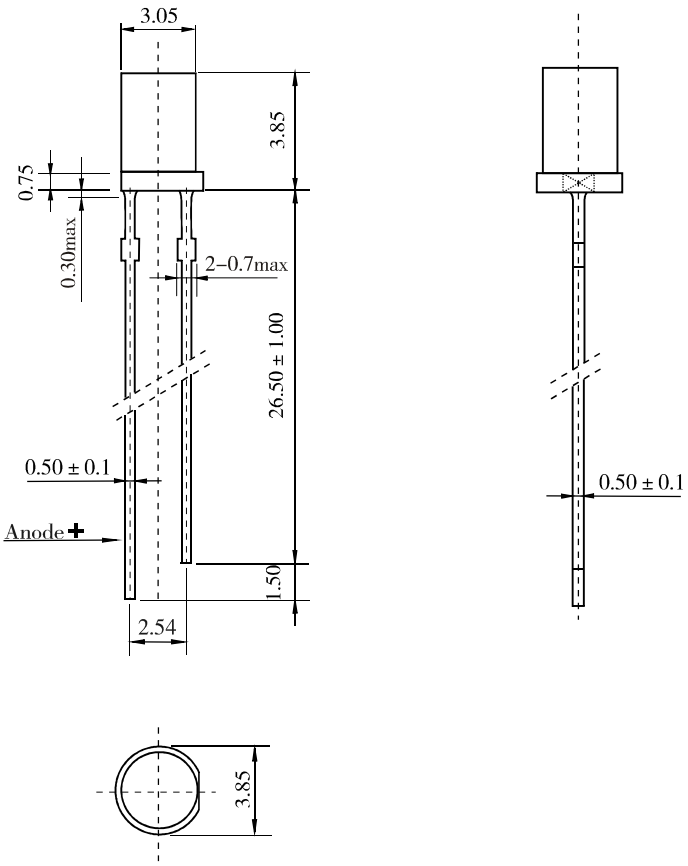

Tolerance is ± 0.25mm unless otherwise noted, Unit=mm
Pin bending ≦ length*1%

Electrical Optical Characteristics (Ta=25℃)

Parameter	Symbol	Pure Green			Unit	Test Condition
		Min	Typ	Max		
Forward Voltage	V_F	---	3.20	3.60	V	IF=20mA
Luminous Intensity	I_V	2180	4500	---	mcd	IF=20mA
Peak Wavelength	λ_P	---	525	---	nm	IF=20mA
Dominant Wavelength	λ_d	---	520	---	nm	IF=20mA
Spectral Line half-width	$\Delta\lambda$	---	30	---	nm	IF=20mA
Reverse Leakage Current	I_R	---	---	50	μA	VR=5V
Viewing Angle	$2\theta_{1/2}$	---	80	---	Deg	IF=20mA

Absolute Maximum Parameters (Ta=25℃)

Parameter	Symbol	Condition	Rating	Unit
Power Dissipation	P_D	---	120	mW
Reverse Voltage	V_R	---	5	V
Forward Average Current	I_F	---	30	mA
Temperature Cofficient	I/C	---	0.4	mA/ ℃
Pulse Current	IFP	Duty=1/10,1kHz	100	mA
Operating Temperature Range	Topr	---	-25 ~ +85	℃
Storage Temperature Range	Tstg	---	-30 ~ +100	℃
Soldering Condition	Tsd	---	260℃/5sec	℃

NOTE:

Luminous Intensity Measurement allowance is ± 10%.

$2\theta_{1/2}$ is the off-axis angle at which the luminous intensity is half the axial luminous intensity.

The dominant wavelength is derivd from the CIE chromaticity diagram and represents the single wavelength which defines the color of the device.

Typical Electro/Optical Characteristic Curves (Ta=25℃)

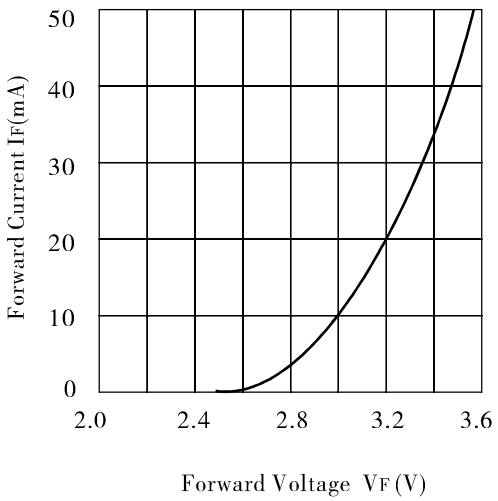

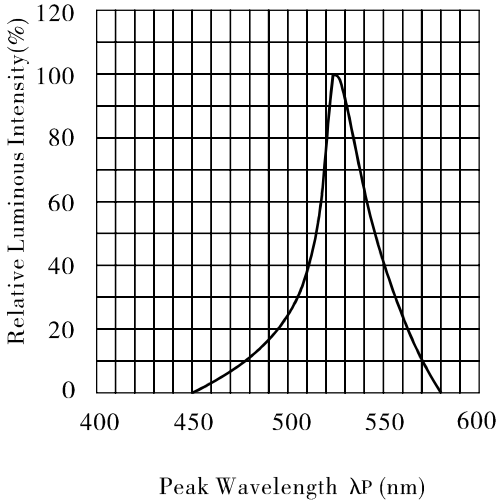

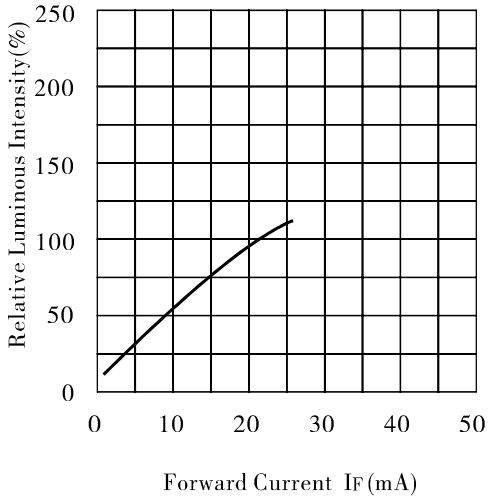

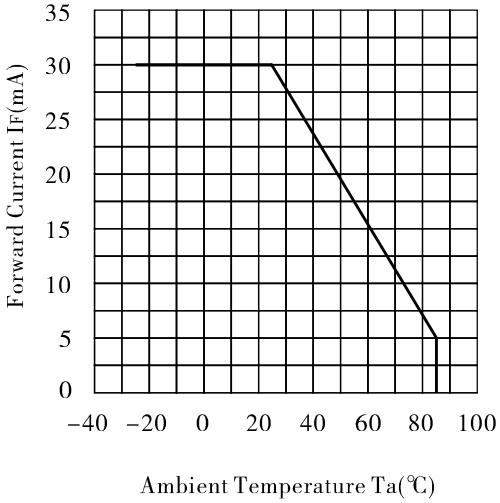

Directive Characteristics

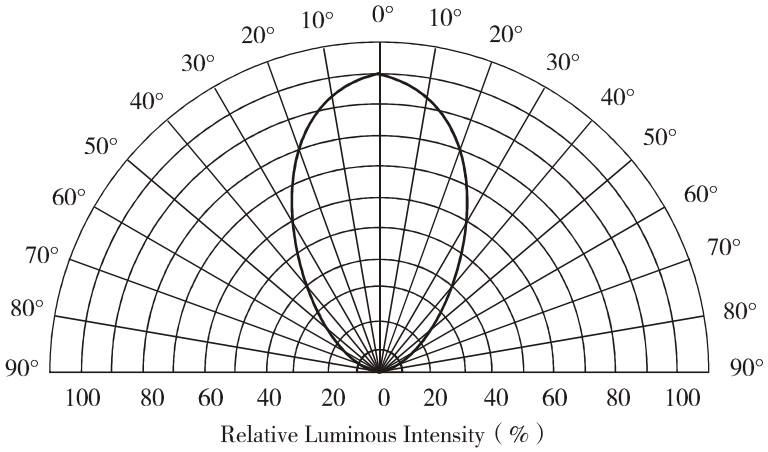

Reliability Test Conditions

Test Item	Test Condition	Result	Judgment Criteria
Consecutive operating life test	IF=20mA, T=25℃, t=168h	0/100	Forward Voltage VF(V)= Upper Limit × 1.2 Reverse Leakage Current IR(μA)=Upper Limit ×2.0 Luminous Intensity IV (mcd)=Lower Limit × 0.7
High temperature storage life test	T=100℃, t=168h	0/100	
Low temperature storage life test	T=25℃, t=168h	0/100	
High temperature humidity storage life test	T=85 ± 2℃, RH=85% ± 3, t=168h	0/100	
Temperature cycle test	-25℃~25℃~100℃ 30min 5min 30min 10cycles	0/100	
Thermal shock test	100℃ 0℃ 5min 5min 20cycles	0/100	
Soldering heat test	T=260 ± 5℃, t=10s ± 1s	0/100	
Solderability test	T=235 ± 5℃, t=5s ± 0.5s	0/100	Steeped Part≥95%
Fall test	h=100cm, 50times	0/100	Surface Appearance Photoelectric Properties Intact
Terminal strength test	W=9.8N, t=30 ± 5s	0/100	
Lead bending test	W=4.9N, 2times	0/100	