CIXI WANJIE ELECTRONIC CO., LTD

product specification

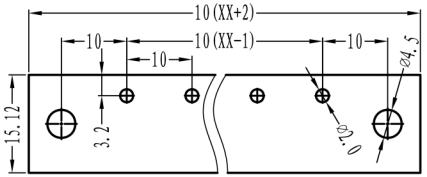

P.C.B. LAYOUT

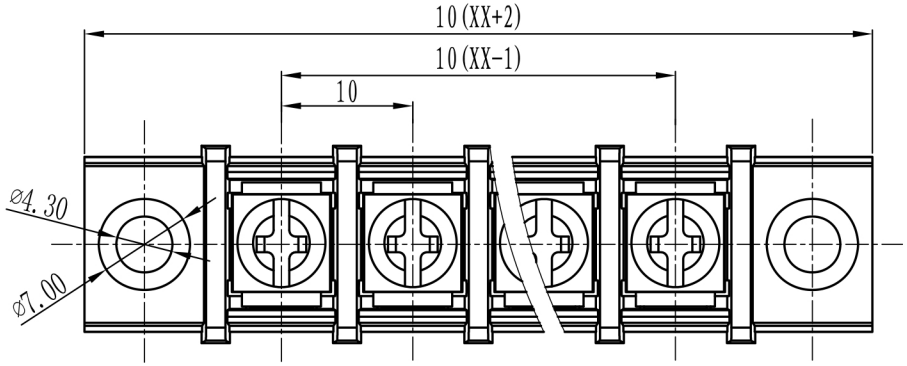

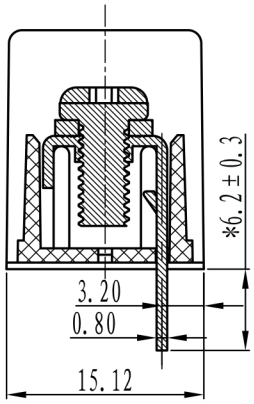

SECTION A-A

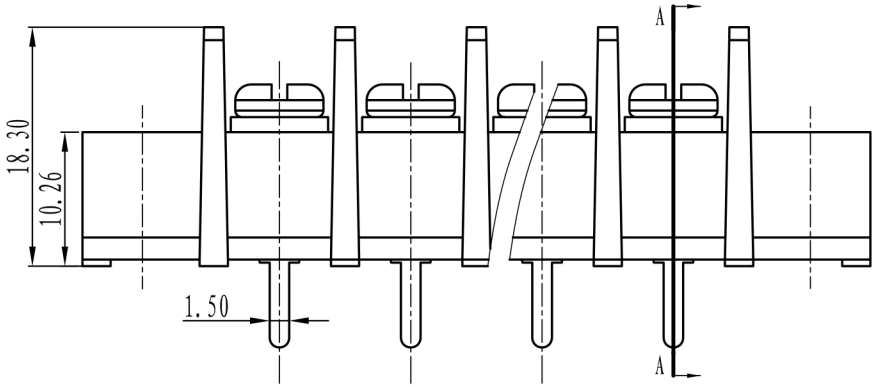

Electrical

Standard:	UL	IEC
Rated voltage:	300V	750V
Rated current:	20A	24A
Wire range:	22-12AWG	2.5mm²

Withstanding voltage: AC2000V/1Min

Insulation resistance: 500MΩ/DC500V

Mechanical

Temp.Range: -40° C~+105° C

Max.Talue: 1.2Nm(10.6lb.in)

Dimensions

Pitch: 10.0mm

Poles: 2P-22P

Material

Housing: PA66, UL94V-0

Screws: M4, steel Ni plated

Pin header: Brass, 0.8, Tin plated

HOW TO ORDER

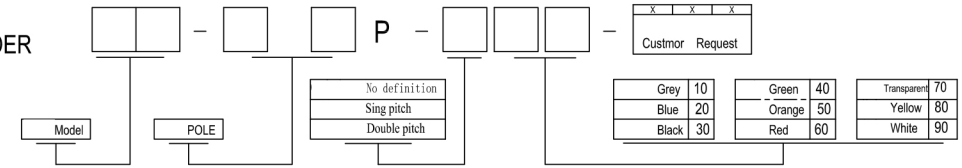

	linear dimension(Tolerances Standard GB/T 14486-2008)											≡	—	▱	//	⊥
variable range	to 6	over 6 to 10	over 10 to 18	over 18 to 30	over 30 to 50	over 50 to 80	over 80 to 120	over 120 to 160	over 160 to 200	over 200 to 250	over 250 to	all	to 5	over 5 to 30	over 30 to 120	over 120 to
tolerance	±0.1	±0.14	±0.19	±0.25	±0.32	±0.43	±0.57	±0.72	±0.88	±1.05	±1.25	0.5	0.025	0.06	0.12	0.4

UNITS	mm	SIZE	A4	SCALE	FIRST ANGLE PROJECTION
CIXI WANJIE ELECTRONIC CO., LTD					NAME: WJ55SM-XXP-1YY-00A