# CIXI WANJIE ELECTRONIC CO., LTD

product specification

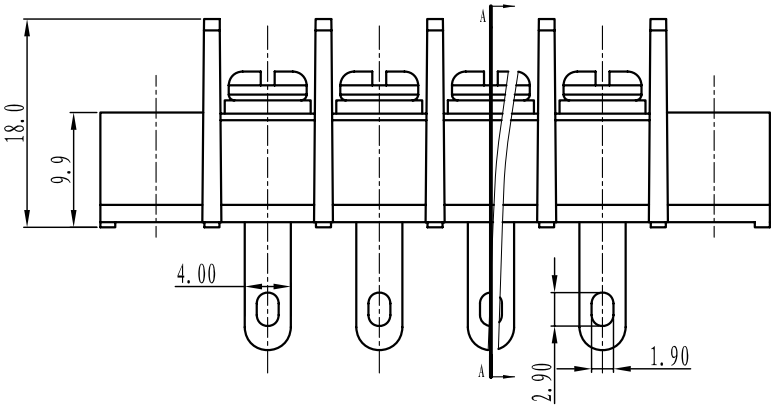


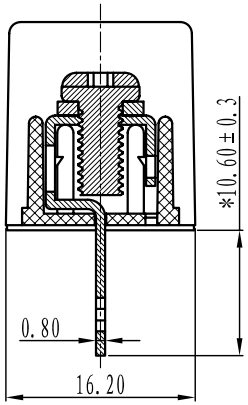


Section A-A

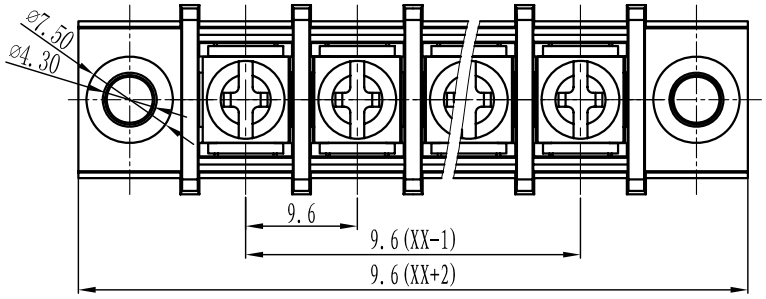


## Electrical

| | | |
|---|---|---|
| Standard: | UL | IEC |
| Rated voltage: | 300V | 750V |
| Rated current: | 20A | 32A |
| Wire range: | 22-12AWG | 4.0mm$^2$ |

Withstanding voltage: AC2000V/1Min

Insulation resistance: 500MΩ/DC500V

## Mechanical

Temp.Range: -40° C~+105° C

Max.Talue: 1.2Nm(10.6lb.in)

## Dimensions

Pitch: 9.6mm

Poles: 2P-24P

## Material

Housing: PA66, UL94V-0

Screws: M4, steel Ni plated

Pin header: Brass, 0.8, Tin plated

TOLERANCES EXCEPT AS NOTED

| | linear dimension | | | | | fillet | chamfer | | ∠ short angle sid | | | | ≡ | — | ▱ | // | ⊥ |
|---|---|---|---|---|---|---|---|---|---|---|---|---|---|---|---|---|---|
| variable range | to 6 | over 6 to 30 | over 30 to 120 | over 120 to 480 | over 480 to | all | to 6 | over 6 to | to 10 | over 10 to 50 | over 50 to 120 | over 120 to | all | to 5 | over 5 to 30 | over 30 to 120 | over 120 to |
| tolerance | ±0.1 | ±0.2 | ±0.3 | ±0.5 | ±0.9 | ±0.2 | ±0.5 | ±1 | 1° | 30' | 20' | 10' | 0.5 | 0.025 | 0.06 | 0.12 | 0.4 |

| UNITS | mm | SIZE | A4 | SCALE | | FIRST ANGLE PROJECTION |
|---|---|---|---|---|---|---|
| CIXI WANJIE ELECTRONIC CO., LTD | | | | | | NAME: WJ45HM-XXP-1YY-00A |