CIXI WANJIE ELECTRONIC CO., LTD

product specification

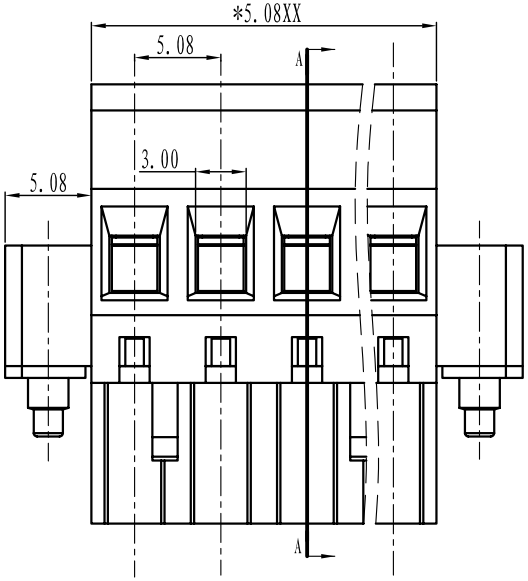

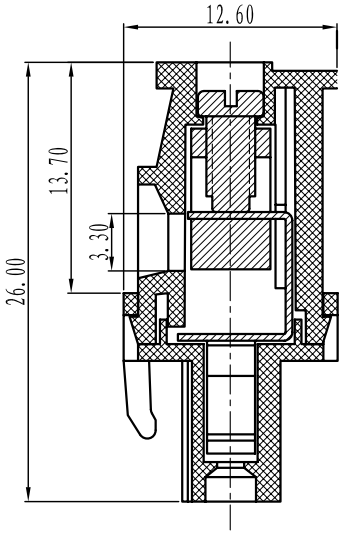

SECTION A-A

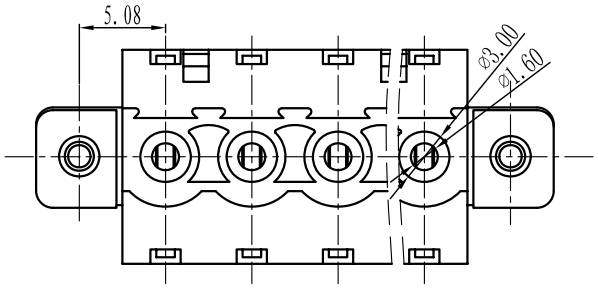

Electrical

Standard:	UL	IEC
Rated voltage:	300V	320V
Rated current:	15A	10A

Contact resinstance: 20mΩ

Wire range: 28-12AWG 2.5mm²

Withstanding voltage: AC2000V/1Min

nsulation resistance: 5000MΩ/DC1000V

Mechanical

Temp.Range: -40° C~+105° C

Torque: 0.5Nm(4.51b`in)

Strip length: 7-8mm

Dimensions

Pitch: 5.08mm

Poles: 2P-24P

Material

Housing: PA66,UL94V-0

Screws: M3,steel Zinc plated

Clamp: Brass,Ni plated

wire guard: Phosphor bronze,Ni plated

HOW TO ORDER

□□ - □ □ P - □□□ - X X X Custmor Request

型号/Model

极数/POLE

0.未定义/No definition
1.单间距/Sing pitch
2.双倍间/Double pitch

灰色/Grey	10	绿色/Green	40	透明/Transparent	70
蓝色/Blue	20	橙色/Orange	50	黄色/Yellow	80
黑色/Black	30	红色/Red	60	白色/White	90

TOLERANCES EXCEPT AS NOTED

	linear dimension					fillet	chamfer		∠ short angle sid				≡	—	▱	//	⊥
variable range	to 6	over 6 to 30	over 30 to 120	over 120 to 480	over 480 to	all	to 6	over 6 to	to 10	over 10 to 50	over 50 to 120	over 120 to	all	to 5	over 5 to 30	over 30 to 120	over 120 to
tolerance	±0.1	±0.2	±0.3	±0.5	±0.9	±0.2	±0.5	±1	1°	30'	20'	10'	0.5	0.025	0.06	0.12	0.4

UNITS	mm	SIZE	A4	SCALE	FIRST ANGLE PROJECTION
CIXI WANJIE ELECTRONIC CO., LTD					NAME WJ2EDGKAM-5.08-XXP-1YY-00A