CIXI WANJIE ELECTRONIC CO., LTD

product specification

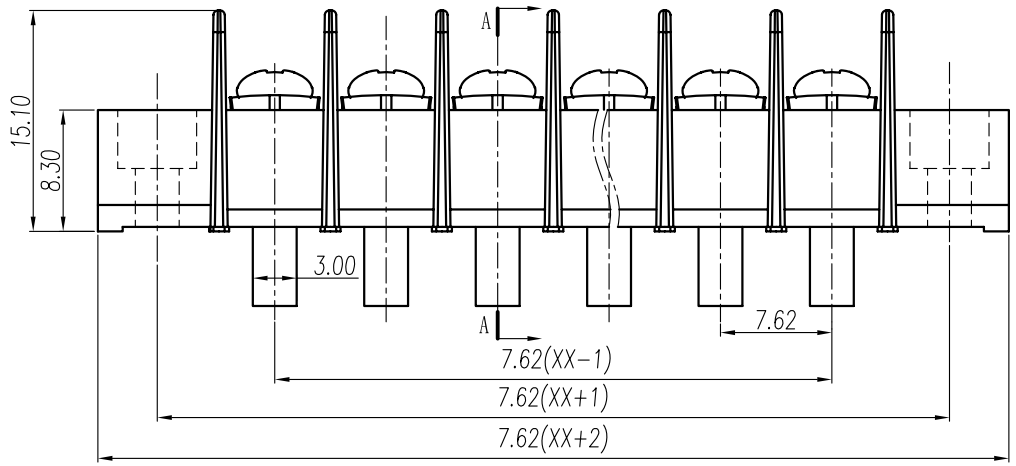

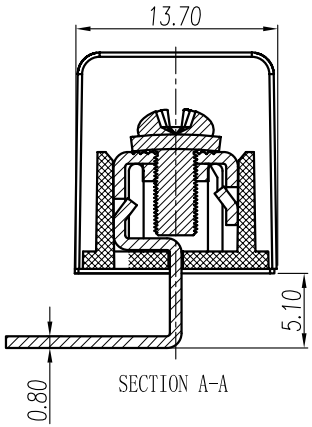

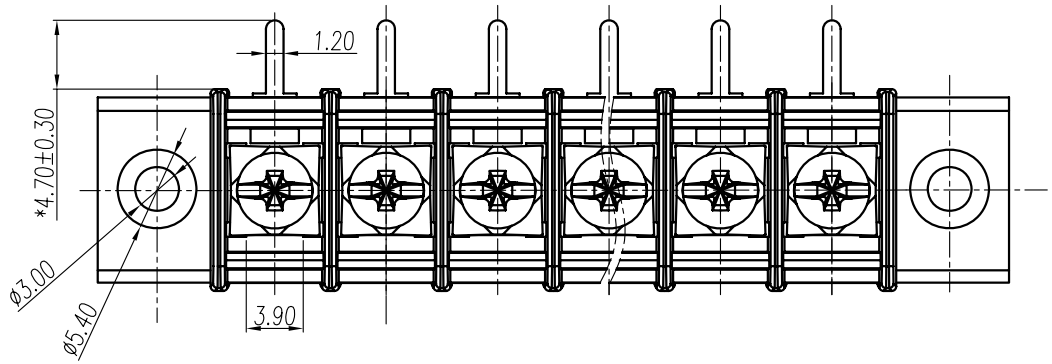

Electrical

Standard: UL IEC

Rated voltage: 300V 250V

Rated current: 15A 24A

Wire range: 22-14AWG 2.5mm^2

Withstanding voltage: AC2000V/1Min

Insulation resistance: 500MΩ/DC500V

Mechanical

Torque: 0.5Nm(4.5lb.in)

Temp.Range: -40°C~+105°C

Dimensions

Pitch: 7.62mm

Poles: 2p-24p

Material

Housing: PA66，UL94V-0

Screws: M3，steel，Ni Plated

Pin header: Brass,Tin plated

TOLERANCES EXCEPT AS NOTED

	linear dimension					fillet	chamfer		∠ short angle sid				≡	—	▱	//	⊥
variable range	to 6	over 6 to 30	over 30 to 120	over 120 to 480	over 480 to	all	to 6	over 6 to	to 10	over 10 to 50	over 50 to 120	over 120 to	all	to 5	over 5 to 30	over 30 to 120	over 120 to
tolerance	±0.1	±0.2	±0.3	±0.5	±0.9	±0.2	±0.5	±1	1°	30'	20'	10'	0.5	0.025	0.06	0.12	0.4

UNITS	mm	SIZE	A4	SCALE		FIRST ANGLE PROJECTION
CIXI WANJIE ELECTRONIC CO., LTD						NAME: WJ25RM-XXP-1YY-00A