CIXI WANJIE ELECTRONIC CO., LTD

product specification

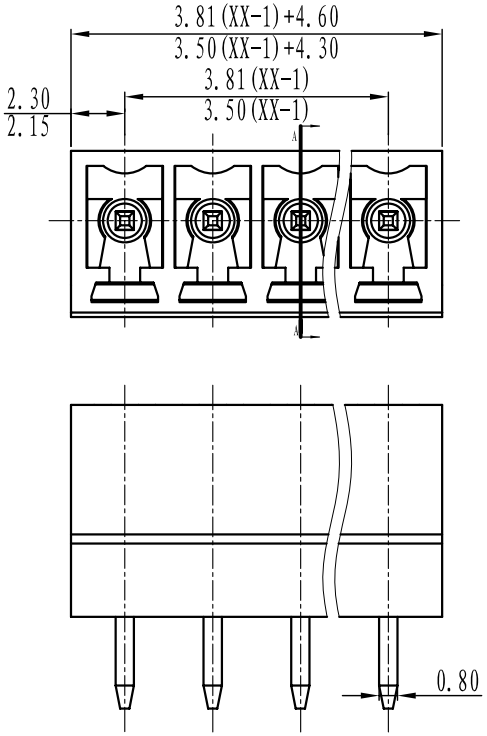

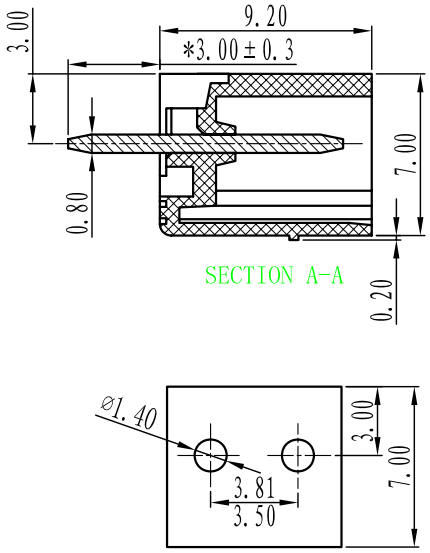

Electrical

Standard:	UL	IEC
Rated voltage:	125V	130V
Rated current:	8A	7A

Contact resistance: 20mΩ

Withstanding voltage: AC2000V/1Min

nsulation resistance: 5000MΩ/DC1000V

Mechanical

Temp.Range: -40° C~+105° C

MAX Soldeting: +250° C, for 5 Sec

Dimensions

Pitch: 3.81mm/3.50mm

Poles: 2P-24P

Material

Housing: PA66, UL94V-0

Pin header: Brass, Tin plated

HOW TO ORDER

□□ - □ □ P - □□□ - x x x Custmor Request

型号/Model

极数/POLE

0.未定义/No definition
1.单间距/Sing pitch
2.双倍间/Double pitch

灰色/Grey	10
蓝色/Blue	20
黑色/Black	30
绿色/Green	40
橙色/Orange	50
红色/Red	60
透明/Transparent	70
黄色/Yellow	80
白色/White	90

TOLERANCES EXCEPT AS NOTED

	linear dimension					fillet	chamfer		∠ short angle sid				≡	—	▱	//	⊥
variable range	to 6	over 6 to 30	over 30 to 120	over 120 to 480	over 480 to	all	to 6	over 6 to	to 10	over 10 to 50	over 50 to 120	over 120 to	all	to 5	over 5 to 30	over 30 to 120	over 120 to
tolerance	±0.1	±0.2	±0.3	±0.5	±0.9	±0.2	±0.5	±1	1°	30'	20'	10'	0.5	0.025	0.06	0.12	0.4

UNITS	mm	SIZE	A4	SCALE	
CIXI WANJIE ELECTRONIC CO., LTD					FIRST ANGLE PROJECTION
				NAME	WJ15EDGVC-XXP-1YY-00A