CIXI WANJIE ELECTRONIC CO., LTD

THE SPEC SHEET

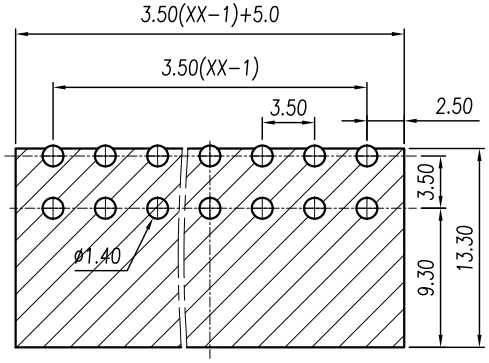

P.C.B. LAYOUT

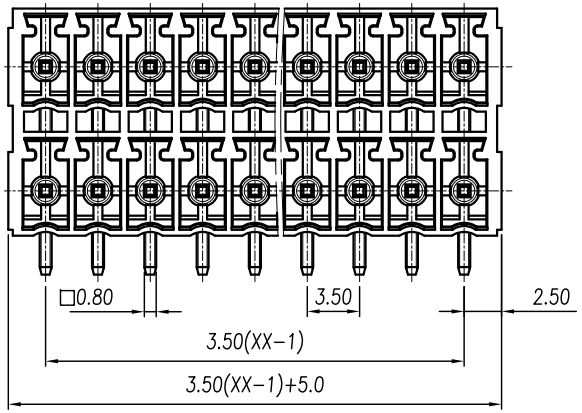

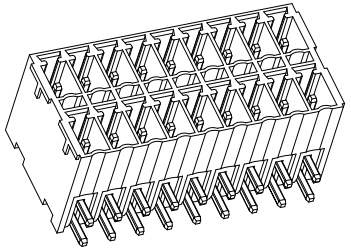

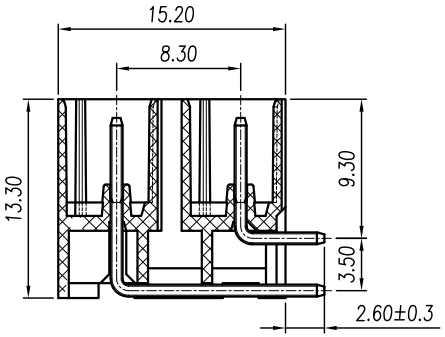

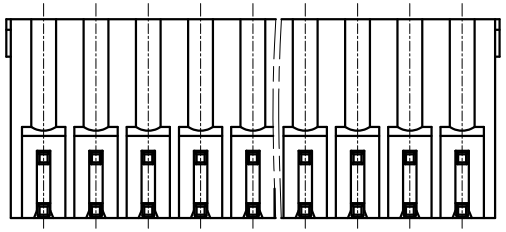

Electrical

Standard:	UL	IEC
Rated voltage:	300V	250V
Rated current:	8A	10A
Contact resinstance:	20mΩ	
Withstanding voltage:	AC2000V/1Min	
Insulation resistance:	500MΩ/DC500V	

Mechanical

Temp.Range: -40° C~+105° C

Max soldering: 250° C 5 Sec

Dimensions

Pitch: 3.5mm,

Poles: 2*2P-2*10P

Material

Housing: PBT, UL94V-0

Pin Header: Brass, Tin plated

	linear dimension(Tolerances Standard GB/T 14486-2008)											≡	—	▱	//	⊥
variable range	to 6	over 6 to 10	over 10 to 18	over 18 to 30	over 30 to 50	over 50 to 80	over 80 to 120	over 120 to 160	over 160 to 200	over 200 to 250	over 250 to	all	to 5	over 5 to 30	over 30 to 120	over 120 to
tolerance	±0.1	±0.14	±0.19	±0.25	±0.32	±0.43	±0.57	±0.72	±0.88	±1.05	±1.25	0.5	0.025	0.06	0.12	0.4

UNITS	mm	SIZE	A4	SCALE	2:1	THIRD ANGLE PROJECTION
CIXI WANJIE ELECTRONIC CO., LTD						TITLE: WJ15EDGRHB-3.5-2*XXP-1YY-00A