# CIXI WANJIE ELECTRONIC CO., LTD

product specification

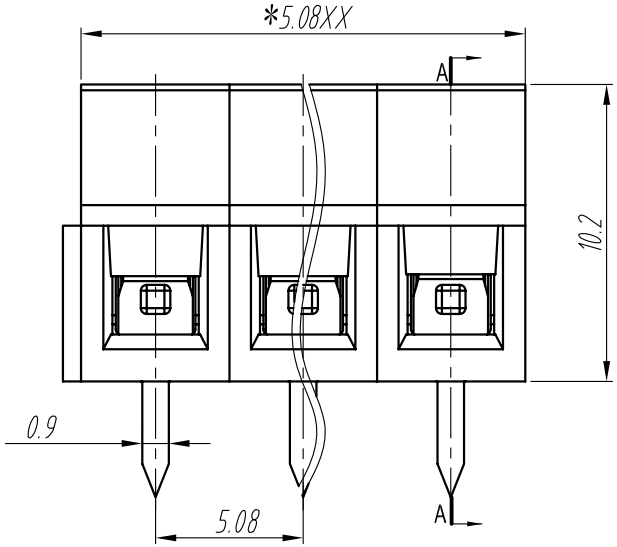


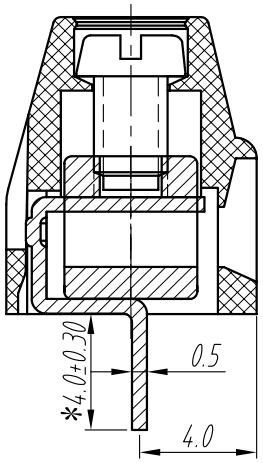


Section: A-A

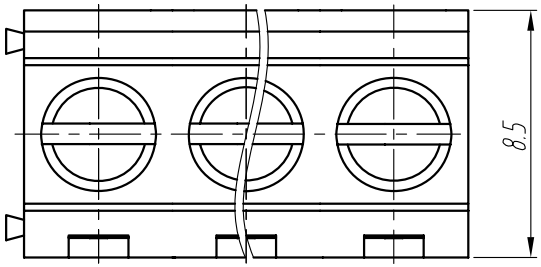


P.C.B.LAYOUT

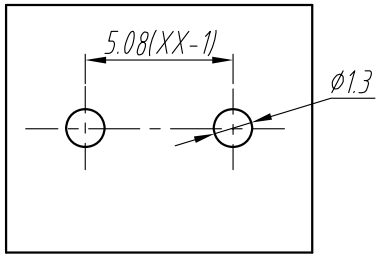


## Electrical

| Standard | UL | IEC |
|---|---|---|
| Rated voltage | 300V | 250V |
| Rated current | 8A | 15A |
| Contact resistance | 20mΩ | |
| Insulation resistance | 5000MΩ/DC1000V | |
| Wire range | 26–16AWG 1.5mm² | |
| Withstanding voltage | AC 2000V/1 Min | |

## Mechanical

| | |
|---|---|
| Temp.Range | –40℃~+105℃ |
| MAX Soldering | +250℃ for 5 Sec |
| Torque | 0.4Nm(3.6lb.in) |
| Strip length | 5–6mm |

## Dimensions

| | |
|---|---|
| Pitch | 5.08 mm |
| Poles | 2p.xxp |

## Material

| | |
|---|---|
| Housing | PA66,UL94V–0 |
| Screws | M2.5 steel Zinc plated |
| Pin housing | Brass,Tin plated |
| Clamp | Brass, Ni plated |

TOLERANCES EXCEPT AS NOTED

| | linear dimension | | | | | fillet | chamfer | | ∠ short angle sid | | | | ≡ | — | ▱ | // | ⊥ |
|---|---|---|---|---|---|---|---|---|---|---|---|---|---|---|---|---|---|
| variable range | to 6 | over 6 to 30 | over 30 to 120 | over 120 to 480 | over 480 to | all | to 6 | over 6 to | to 10 | over 10 to 50 | over 50 to 120 | over 120 to | all | to 5 | over 5 to 30 | over 30 to 120 | over 120 to |
| tolerance | ±0.1 | ±0.2 | ±0.3 | ±0.5 | ±0.9 | ±0.2 | ±0.5 | ±1 | 1° | 30' | 20' | 10' | 0.5 | 0.025 | 0.06 | 0.12 | 0.4 |

| UNITS | mm | SIZE | A4 | SCALE | |
|---|---|---|---|---|---|

FIRST ANGLEPROJECTION

CIXI WANJIE ELECTRONIC CO., LTD

NAME WJ127–5.08