CIXI WANJIE ELECTRONIC CO., LTD

product specification

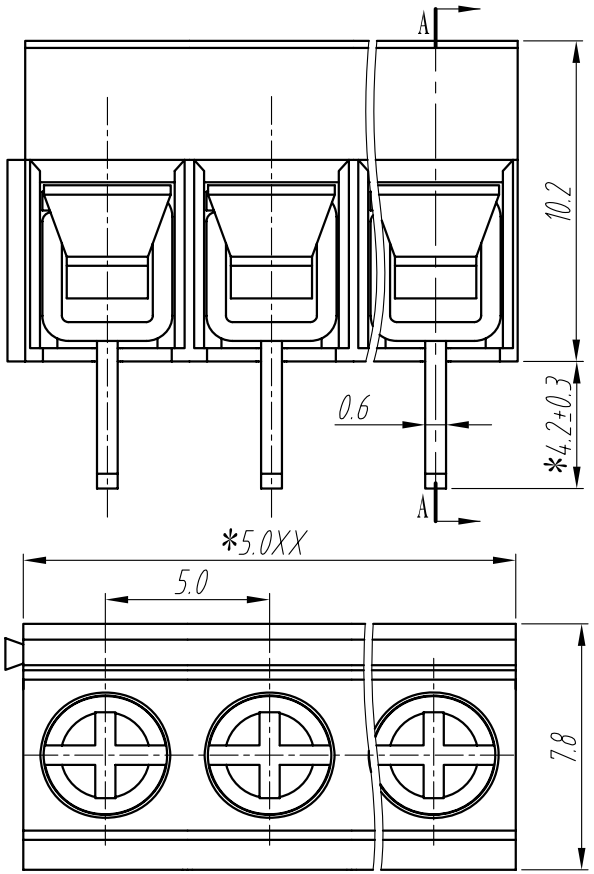

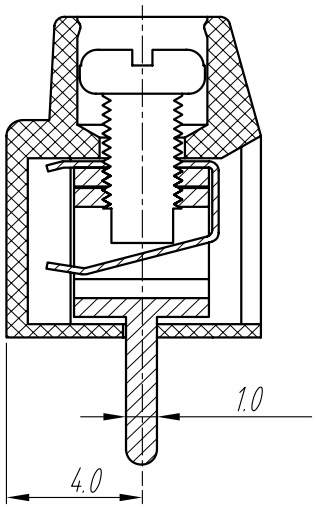

SECTION A-A

P.C.B.LAYOUT

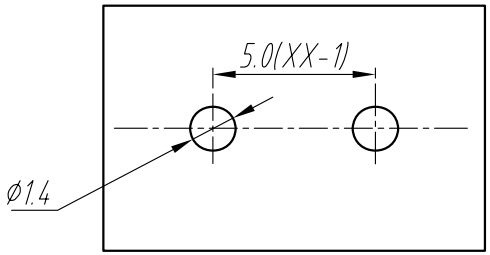

Electrical

Standard	UL	IEC
Rated voltage	300V	250V
Rated current	8A	15A
Contact resistance	20mΩ	
Insulation resistance	5000MΩ/DC1000V	
Wire range	26–16AWG 1.5mm²	
Withstanding voltage	AC 2000V/1 Min	

Mechanical

Temp.Range	–40℃~+105℃
MAX Soldering	+250℃ for 5 Sec
Torque	0.4Nm(3.6lb.in)
Strip length	6–7mm

Dimensions

Pitch	5.0mm 10.0mm
Poles	2p.xxp

Material

Housing	PA66,UL94V–0
Screws	M2.5 steel Zinc plated
Pin housing	Brass,Tin plated
Wire guard	Phosphor bronze, Ni plated

TOLERANCES EXCEPT AS NOTED

	linear dimension					fillet	chamfer		∠ short angle sid				≡	—	▱	//	⊥
variable range	to 6	over 6 to 30	over 30 to 120	over 120 to 480	over 480 to	all	to 6	over 6 to	to 10	over 10 to 50	over 50 to 120	over 120 to	all	to 5	over 5 to 30	over 30 to 120	over 120 to
tolerance	±0.1	±0.2	±0.3	±0.5	±0.9	±0.2	±0.5	±1	1°	30'	20'	10'	0.5	0.025	0.06	0.12	0.4

UNITS	mm	SIZE	A4	SCALE	

FIRST ANGLEPROJECTION

CIXI WANJIE ELECTRONIC CO., LTD

NAME WJ126–5.0