CIXI WANJIE ELECTRONIC CO., LTD

THE SPEC SHEET

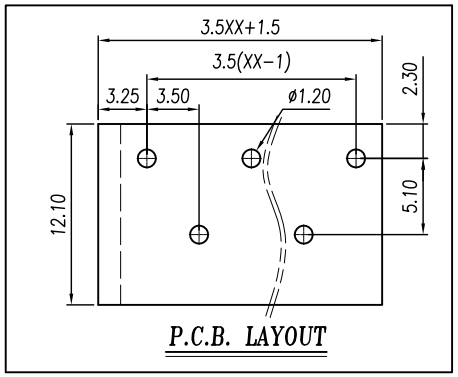

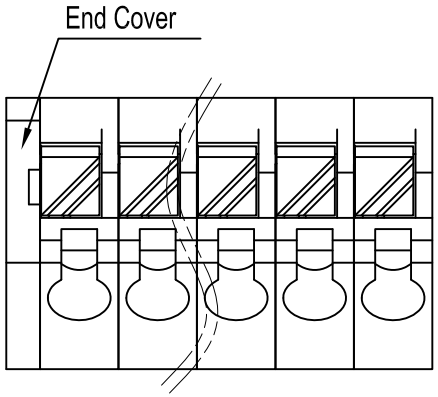

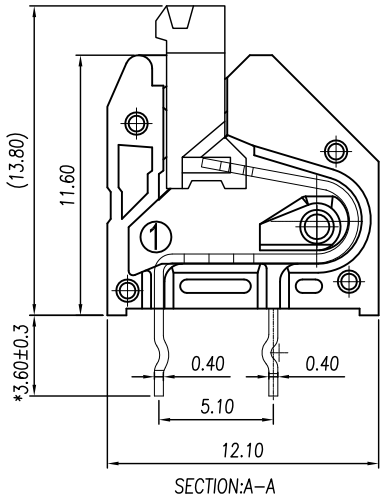

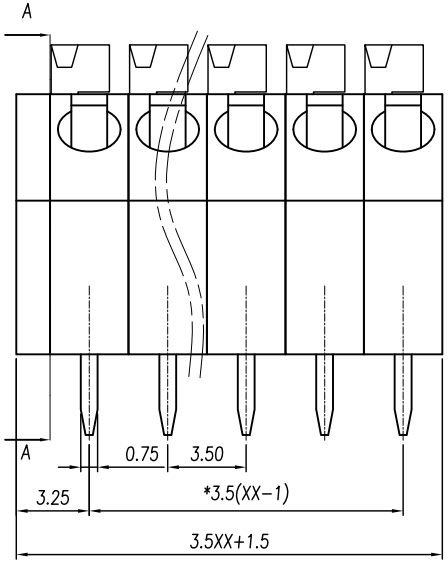

Electrical

Standard	UL	IEC
Rated voltage	300V	250V
Rated current	5A	8A
Contact resistance	20mΩ	
Insulation resistance	500MΩ/DC500V	
Wire range	22~18AWG	0.75mm²
Wrth standing voltage	AC 2000V/1 Min	

Mechanical

Temp.Range	-40°C~+105°C
MAX Soldering	+250°C, for 5 Sec
Steip Length	8-9mm

Dimensions

Pitch	3.5mm
Poles	1~XXP

Material

Housing	PA66，UL94V-0
Pin header	Phosphor bronze 0.4t Tin plated

	linear dimension(Tolerances Standard GB/T 14486−2008)											≡	—	▱	//	⊥
variable range	to 6	over 6 to 10	over 10 to 18	over 18 to 30	over 30 to 50	over 50 to 80	over 80 to 120	over 120 to 160	over 160 to 200	over 200 to 250	over 250 to	all	to 5	over 5 to 30	over 30 to 120	over 120 to
tolerance	±0.1	±0.14	±0.19	±0.25	±0.32	±0.43	±0.57	±0.72	±0.88	±1.05	±1.25	0.5	0.025	0.06	0.12	0.4

UNITS	mm	SIZE	A4	SCALE	3:1	THIRD ANGLE PROJECTION
CIXI WANJIE ELECTRONIC CO., LTD						TITLE WJ250-3.5-XXP-1YY-00A