OD5210 High Speed Series

DC Fans - 5, 12, 24V
52mm x 10.5mm (2.0" x 0.4")

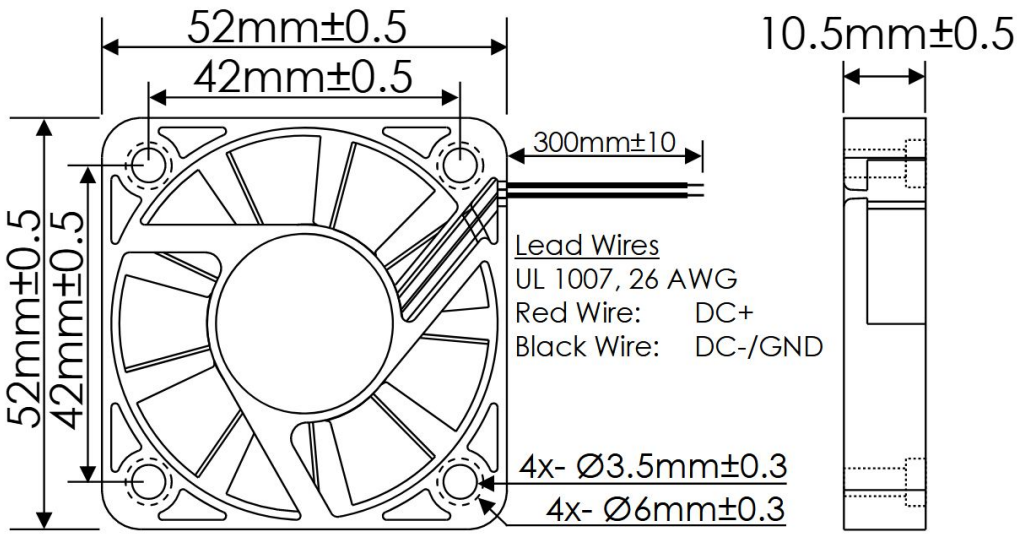

Frame	PBT, UL94 V-0 Plastic
Impeller	PBT, UL94 V-0 Plastic
Connection	2x Wire Leads, 26 AWG
Motor	Brushless DC, Auto Cutoff, Auto Restart, Electronically Protected, Polarity Protected
Bearing System	Ball Bearings
Dielectric Strength	500VDC/min, <1mA
Insulation Resistance	≥10MΩ @ 500VDC

Operating Temperature
-20°C ~ +65°C

Storage Temperature
-20°C ~ +75°C

Life Expectancy
70,000 Hours (L10 at 40°C)

Available Options
PWM Speed Control Input
Tachometer Output
Alarm Output
IP Ratings

Weight: 0.05 lbs

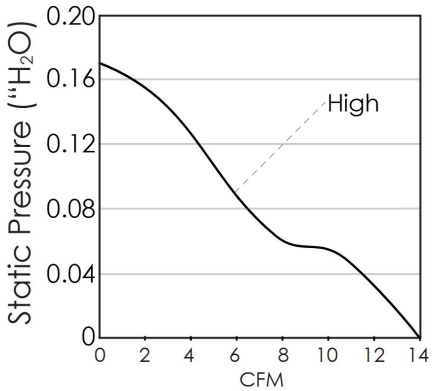

Part Number	Rated Voltage (Volts DC)	Voltage Range (Volts DC)	Input Power (Watts)	Rated Current (Amps)	Rated Speed (RPM)	Max Airflow (CFM)	Noise Level (dBA)	Max Static Pressure ("H_2O)
OD5210-05HB	5	4.5 ~ 5.5	1.25	0.25	5950	14.0	37.8	0.17
OD5210-12HB	12	12 ~ 13.8	1.44	0.12	5950	14.0	37.8	0.17
OD5210-24HB	24	14 ~ 26.4	1.92	0.08	5950	14.0	37.8	0.17

Knight Electronics, Inc.
10557 Metric Drive
Dallas, TX 75243
214-340-0265

Revised 3/14/2024
m0

Orion Fans
Information and data is subject to change without prior notification

OD5210 High Speed Series with Alarm

DC Fans - 5, 12, 24V
52mm x 10.5mm (2.0" x 0.4")

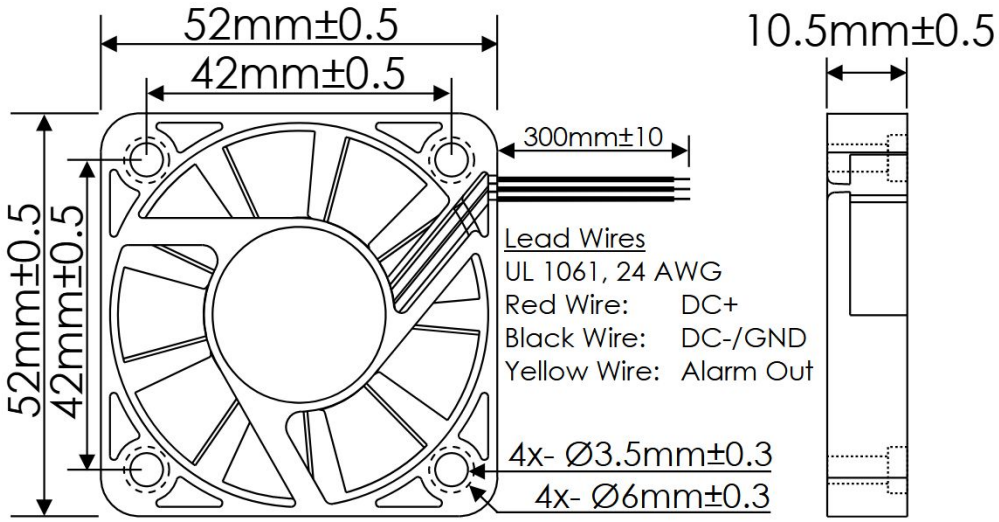

Frame	PBT, UL94 V-0 Plastic
Impeller	PBT, UL94 V-0 Plastic
Connection	3x Wire Leads, 24 AWG
Motor	Brushless DC, Auto Cutoff, Auto Restart, Electronically Protected, Polarity Protected
Bearing System	Ball Bearings
Dielectric Strength	500VDC/min, <1mA
Insulation Resistance	≥10MΩ @ 500VDC

Operating Temperature
-20°C ~ +65°C
Storage Temperature
-20°C ~ +75°C
Life Expectancy
70,000 Hours (L10 at 40°C)

Installed Options
Open Collector Alarm Output

Available Options
Inverted Alarm Logic

Weight: 0.05 lbs

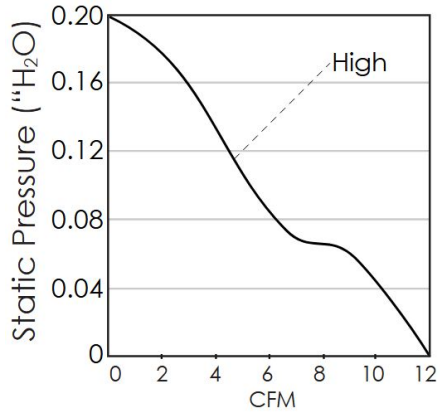

Part Number	Rated Voltage (Volts DC)	Voltage Range (Volts DC)	Input Power (Watts)	Rated Current (Amps)	Rated Speed (RPM)	Max Airflow (CFM)	Noise Level (dBA)	Max Static Pressure ("H_2O)
OD5210-05HB02A	5	4.5 ~ 5.5	1.25	0.25	5950	14.0	37.8	0.17
OD5210-12HB02A	12	12 ~ 13.8	1.44	0.12	5950	14.0	37.8	0.17
OD5210-24HB02A	24	14 ~ 26.4	1.92	0.08	5950	14.0	37.8	0.17

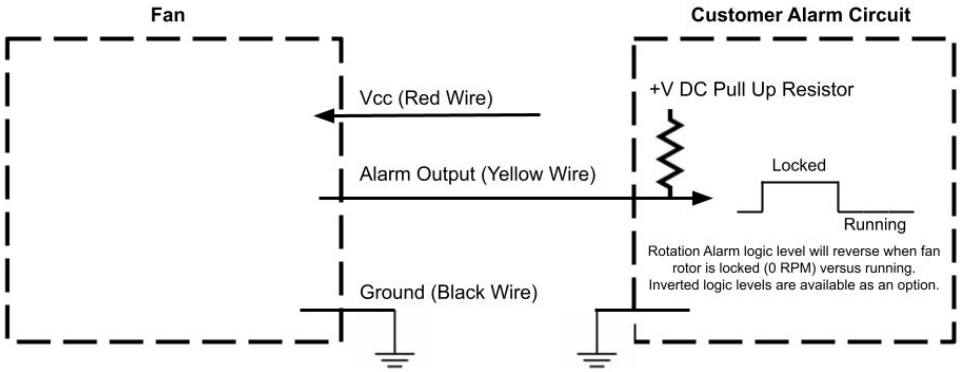

Alarm Max Pullup Voltage:	Fan Vcc
Alarm Max Sink Current:	5mA
Alarm Active Locked Rotor State:	HIGH

Knight Electronics, Inc.
10557 Metric Drive
Dallas, TX 75243
214-340-0265

Revised 3/14/2024
m0

Orion Fans

Information and data is subject to change without prior notification

OD5210 Medium Speed

DC Fans - 12V
52mm x 10mm (2.0" x 0.4")

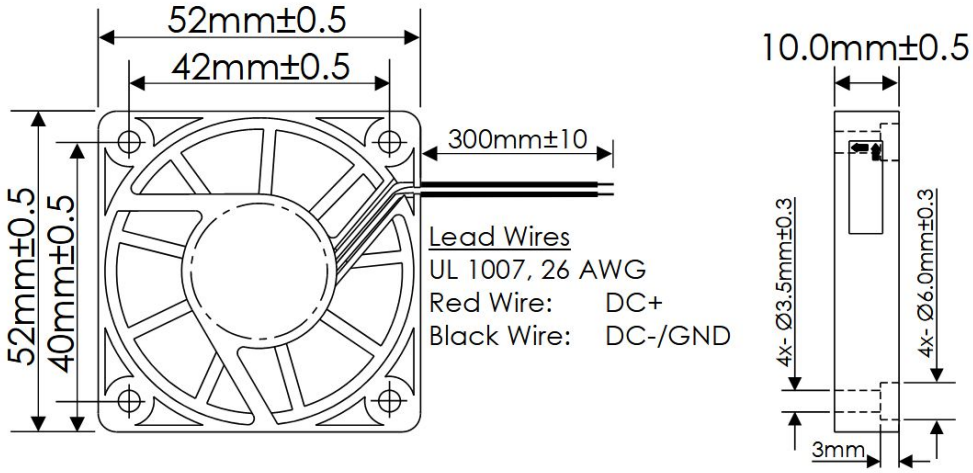

Frame	PBT, UL94 V-0 Plastic
Impeller	PBT, UL94 V-0 Plastic
Connection	2x Wire Leads, 26 AWG
Motor	Brushless DC, Auto Cutoff, Auto Restart, Electronically Protected, Polarity Protected
Bearing System	Ball Bearings
Dielectric Strength	500VDC/min, <1mA
Insulation Resistance	≥10MΩ @ 500VDC

Operating Temperature
-20°C ~ +65°C

Storage Temperature
-20°C ~ +75°C

Life Expectancy
70,000 Hours (L10 at 40°C)

Weight: 0.05 lbs

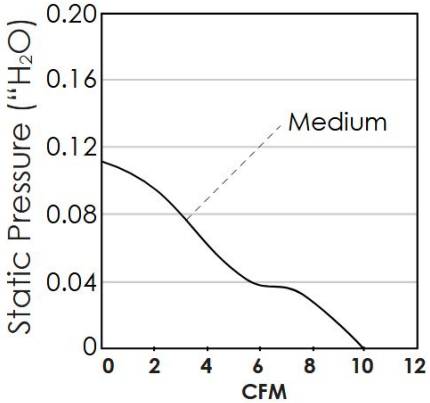

Part Number	Rated Voltage (Volts DC)	Voltage Range (Volts DC)	Input Power (Watts)	Rated Current (Amps)	Rated Speed (RPM)	Max Airflow (CFM)	Noise Level (dBA)	Max Static Pressure ("H_2O)
OD5210-12MB	12	8 ~ 13.8	1.44	0.12	5000	10.0	32	0.11

Knight Electronics, Inc.
10557 Metric Drive
Dallas, TX 75243
214-340-0265

Revised 3/14/2024
m4

Orion Fans
Information and data is subject to change without prior notification