# Compact fans for AC, DC and EC

Version 2019-04

ebmpapst

the engineer's choice



# Trendsetter in fan technology

*Uncompromising quality made by ebm-papst*





**Among the best.**
Trendsetting with innovative technologies. Listening to customers' needs. Developing new ideas to meet requirements and realizing them with pioneering spirit. This philosophy has made ebm-papst the leading technology pioneer in the world of fans.

A brand in that decades of application expertise gained from large-volume fan production and because we are in a position to produce highly efficient quality products. Our intelligent solutions for electronics cooling make sure that you are always one step ahead of the competition thanks to innovative, reliable, top-quality technology. Of course they are readily available at fair market prices.
And if required, tailor-made right down to the last detail. In other words, if you need fans that do not yet actually exist, contact us.

Insist on ebm-papst.

# Table of contents


**Information**
– About ebm-papst 4
– Expertise and technology 6
– Tailor-made 8
– Optional special designs 10
– Types of fans 11
– Selecting the correct fan 12
– Fan installation 13
– Service life 15
– Definitions 16
– Standard test equipment to determine the fan characteristics 17
– Type code 18

**DC axial fans** 23
– Axial fans 29

**DC centrifugal fans** 91
– Centrifugal fans 95
– Tangential fans 148
– Centrifugal fans and blowers 150

**DC fans - specials** 175
– Speed signal 178
– Alarm signal 180
– Speed setting 184
– Fan Check 187
– Protected fans, degree of protection: IP 54 / IP 68 188

**ACmaxx / EC axial fans** 191
– ACmaxx axial fans 196
– GreenTech EC tubeaxial fans 200
– Energy-saving axial fans 204
– EC axial fans 206
– ACmaxx in-line duct fans 210

**AC axial fans** 215
– Axial fans 218

**AC centrifugal fans** 243
– Centrifugal fans 246

**Accessories** 253
– Finger guards 254
– Filter fan guards 264
– Air inlet grill 267
– Inlet rings 268
– Connection cables 270
– Handheld programmer 271
– Accessory parts 272
– Connection diagrams 273

**Agents worldwide** 282




# About ebm-papst.

*As technological leader for ventilation and drive engineering, ebm-papst is in demand as an engineering partner in many industries. With over 20,000 different products, we provide the right solution for just about any challenge. Our fans and drives are reliable, quiet and energy-efficient.*

**Six reasons that make us the ideal partner:**

**Our systems expertise.**
You want the best solution for every project. The interrelationships between ventilation and drive engineering must thus be considered as a whole. And that's what we do – with **motor technology** that sets standards, sophisticated **electronics** and **aerodynamic designs** – all from a single source and perfectly matched. These system solutions release unique synergies worldwide. And in particular – they relieve you of a lot of work, so that you can concentrate on your core competency.

**The ebm-papst spirit of invention.**
In addition to our wide range of products, we are always able to develop customized solutions for you. A diversified team of 600 engineers and technicians works at our three locations in Germany: Mulfingen, Landshut and St. Georgen. Contact us to discuss your next project.

**Our lead in technology.**
As pioneer and trail-blazer for developing highly efficient EC technology, we are way ahead of other motor manufacturers. Almost all our products are also available with GreenTech EC technology. The list of benefits is long: higher efficiency, maintenance-free, longer service life, sound reduction, intelligent control characteristics and unrivalled energy efficiency with savings of up to 80 % compared to conventional AC technology. Let our technology be your competitive advantage as you lead in your industry.

**Closeness to our customers.**
ebm-papst has 25 production locations worldwide (including facilities in Germany, China and the USA), together with 49 sales offices, each of which has a dense network of sales representatives. You will always have a local contact, someone who speaks your language and knows your market.

**Our standard of quality.**
Of course you can rely on the highest standards of quality with our products. Our quality management is uncompromising, at every step in every process. This is underscored by our certification according to international standards including DIN EN ISO 9001 and DIN EN ISO 14001.

**Our sustainable approach.**
Assuming responsibility for the environment, for our employees and for society is an integral part of our corporate philosophy. We develop products with an eye to maximum environmental compatibility, in particular resource-preserving production methods. We promote environmental awareness among our young staff and are actively involved in sports, culture and education. That's what makes us a leading company – and an ideal partner for you.

# The story of our success to market and technology pioneer.

| | |
|---|---|
| 1963 | Founding of **Elektrobau Mulfingen GmbH & Co. KG** by Gerhard Sturm and Heinz Ziehl. |
| 1965 | First tubeaxial fan developed in EC/DC technology. |
| 1966 | ebm-papst's success takes off with the new 68 motor. |
| 1972 | The first ebm-papst foreign subsidiary is established in Sweden. |
| 1988 | Gerhard Sturm is awarded the Federal Cross of Merit. |
| 1990 | The sixty-millionth external-rotor fan is produced. |
| 1992 | Acquisition of **PAPST Motoren GmbH** in St. Georgen. |
| 1997 | Buyout of the **Landshut** (mvl) plant. |
| 1998 | Development of first fans with integrated electronics. |
| 2003 | Change of name to **ebm-papst**. |
| 2008 | The **HyBlade®** range of fans sets new efficiency standards. |
| 2010 | **GreenTech** – our sign for energy efficiency and resource preservation. |
| 2011 | **RadiCal** defines a new standard for EC centrifugal fans. |
| 2013 | ebm-papst takes over the gearbox specialist Zeitlauf and wins the **German Sustainability Award**. |
| 2014 | Team partnership with Mercedes AMG PETRONAS Formula 1 team. |
| 2015 | **RadiPac** pushes the limits of efficiency. |
| 2016 | **S-Panther** – the consistent development of the S-Forces series. |
| 2017 | **Factory expansions Germany**: logistics center in Hollenbach and new production unit in St. Georgen. |



# Expertise and technology

**Drive know-how**

For the past 60 years, all conceivable types and applications of drive engineering have played an essential role at ebm-papst. A commitment that is the foundation for the development of optimum drive solutions regardless of the type of fan and its use. DC and EC fans are generally equipped with electronically commutated external rotor motors. In order to save as much space as possible, commutation electronic components are integrated in the hub of the fan. Our AC fans are driven mainly by shaded-pole or capacitor motors based on the external rotor principle. In the 3900 and 9900 range of particularly slim fans, internal rotor motors are used.

**Smooth operation**

Our aerodynamically optimized design and high mechanical precision produces outstanding noise properties in series production. The "soft" commutation electronics of DC and EC fans produce a very smooth operation. By avoiding steep switching edges when the individual coils are switched, this reduces the structure-borne noise from the motor. Computer-aided measurements and series of analyses performed in a state-of-the-art sound measuring chamber are conducted on each fan model from the very beginning.

**Long service life**

The bearing system plays a vital role both in the long service life and the smooth operation of device fans. The Sintec compact bearing provides most of the device fans with a proven bearing system. Constant low noise during the entire operating time and considerably lower shock sensitivity are the outstanding features of this bearing technology. In addition, with regard to temperature endurance, Sintec compact bearings can be used without problems in most applications.

Despite the slightly greater noise and shock sensitivity of ball bearings, this bearing technology should be given preference for fans exposed to extreme thermal and adverse application conditions (e.g. extreme environmental conditions, critical installation position, etc.). The service life data provided in this catalog is based on extensive service life tests and mathematically / scientifically proven service life calculations. Our product descriptions are updated continuously with all relevant data obtained from long-term tests.





**Aerodynamics**
With the aid of state-of-the-art computer programs, we are able to optimize the fan impellers and the inner shape of the housing. Air output and available motor performance are matched exactly to the size of fan. This guarantees the low noise that is typical for ebm-papst, even at high back pressure.

**Sturdy construction – in metal or plastic**
Fans of all-metal construction: sturdy and resistant. The housing is made of an aluminum alloy. The metal surfaces that are subject to corrosion are permanently protected by an impact- and abrasion-resistant electrophoretic baked enamel. This particular version is very recyclable. Fans with fiberglass-reinforced plastic housing and impeller: Excellent stability and low weight distinguish this highly efficient fan design. Combinations of metal housing and plastic impeller combine the advantages of both types of design.

**Product images**
The dimensioned drawings and product photos that appear in the catalog are for orientation purposes and may differ in some details from the actual product design.

**Product liability**
Motors and fans from ebm-papst are components intended for proper installation. The customer bears responsibility for the overall end product.

**Brand name PAPST**
The PAPST mark is a registered brandmark for ebm-papst products and is a synonym for compact fans of the highest quality, functionality and reliability for decades.

**Safety is included**
It goes without saying that all ebm-papst fans conform to the approval requirements of the VDE (Association of German Electrical Engineers)and the standards and regulations of UL and CSA. All fans conform to the European Standard EN 60335 or EN 60950 plus those of the UL (Underwriters Laboratories) and CSA (Canadian Standards Association). With few exceptions, our DC fans are designed to meet the requirements of protection class 3 / protection class voltage. AC fans for protection class 1. ebm-papst fans meet the highest requirements of electrical safety. All design variants feature reverse polarity and locked-rotor protection.

**Quality in detail**
It is the important details that reveal the meaning of the words "made by ebm-papst": Consistent adherence to development and design processes and a goal-oriented commitment to quality along the entire process chain are the foundation for the above-average service life of our fans. 100,000 hours and above are no longer an exception.
The no-compromise ebm-papst quality assurance spans over all process levels – from the choice of materials and the use of carefully selected, certified suppliers, from the production of parts up to the final assembly. These details combine to result in reliable fan products with an above-average service life.

**ErP Directive**
All products with power consumption between 125 W and 500 kW are subject to the European "Energy-related Products Directive" (ErP) for improving energy efficiency, with the first stage applicable from 2013 and the second as of 2015. Thanks to ground-breaking GreenTech EC technology, all of our fans and motors in these performance classes already exceed the ErP Directive today.

# Tailor-made to meet your special requirements

***Practical applications: fans that are customized and smart***

*ebm-papst has always developed customer-specific smart fans that meet the exact requirements of the application. We provide a wide range of standard fan types, in many sizes and designs; with smart motor features, monitoring and control functions, as well as special designs for use under extreme conditions. They are all based on the standard type fans that you will find in this catalog. Special fan types for your application can be produced in economical batch sizes. Our expert engineers will assist you in selecting the right configuration.*

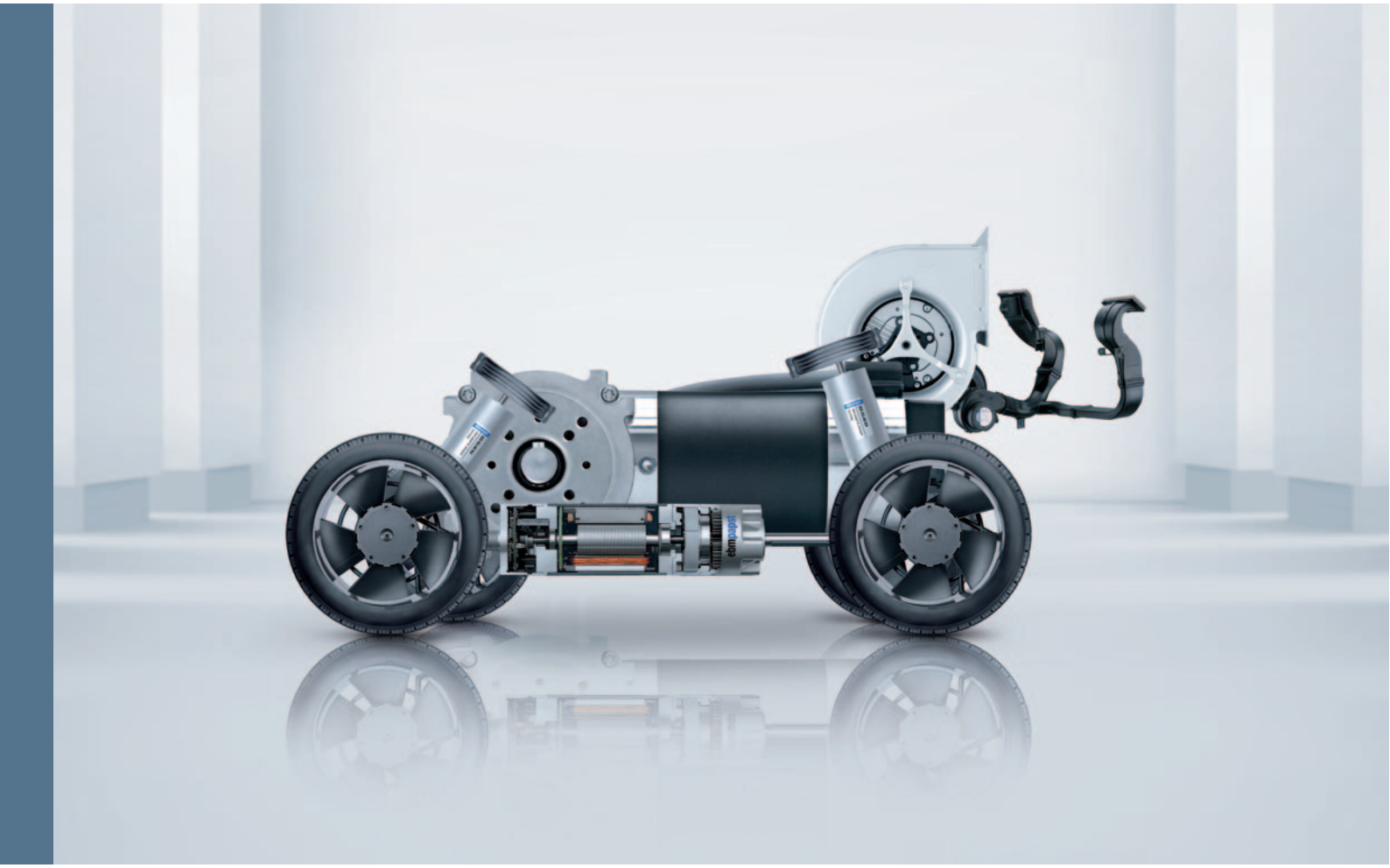

**Innovation at its best:**
Vario-Pro® with "intelligence inside". Its programmed intelligence thanks to customer-specifically configured software modules makes the cooling of electronics even more economical and flexible. For example, temperature-dependent speed profiles are possible with a number of freely selectable interpolation points. External speed settings and a variety of combinable alarm and tachometer functions can also be programmed. The digital motor management achieves high control accuracy.

**Higher degree of protection for every type of application**
ebm-papst provides, on request, many fan series in versions that meet to the requirements of degree of protection IP 54 and IP 68: Their stator and all electrical components are fully encapsulated. Stainless steel ball bearings can be used for operation in particularly aggressive media and use under extreme environmental conditions, thus providing additional reliability.

**Almost anything is possible**
Regardless of your cooling and ventilation tasks, we will develop the right solution. And the most economical one. Based on the fans listed in this catalog, more than 4000 different versions are available.

**Temperature-controlled fans**
Fans with temperature-controlled speed have particularly quiet cooling characteristics. Thanks to integrated IC technology, they adapt their speed to the current cooling requirements. The result is a drastic reduction of noise in most operating conditions. A temperature sensor provides the fan with thermal information: either externally via an exposed wire or integrated into the hub of the fan.

**Speed setting via interfaces**
With a wide range of DC fans with separate control input, ebm-papst provides an alternative to the NTC-controlled types of fans. They are especially suitable for systems and units that already have standard interfaces for varying speed via internal switching and control circuits. The main applications are units that require load-dependent, individual speed profiles or systems with minimum standby cooling requirements and varied speed increase at varying power peaks.

**Electronic tachometer**
Do you want to be informed about the current fan speed at all times? ebm-papst has fans with an integrated "electronic tachometer". It registers the actual value of the fan speed. Via an integrated sensor, the fan generates speed-dependent signals that can be used directly. Depending on the number of poles of the motor, 2, 3, or 6 pulses per revolution are generated.

**Alarm signal for greater safety**
If your application requires monitored fan operation, in addition to speed monitoring, ebm-papst also provides a multitude of varying alarm signals. Depending on the type of fan in question, the signal will either be static, already evaluated, or interface-compatible. The alarm signal output provides reliable long-term monitoring and a status signal if critical operating conditions arise.

**S-Force**
When you need to provide extremely fast, powerful and efficient cooling for electronic components of all kinds, the generation of S-Force high-performance fans finishes first: in air performance, pressure increase, and technology. Extremely efficient drives and optimized aerodynamics form the core technology of the S-Force fans, which we offer in both an axial and centrifugal model.

**S-Panther**
S-Panther power delivered quietly. Wherever there is need for power and reduced noise, fans from the S-Panther range are the right solution. A strong pressure saddle curve at optimum air flow provides the power of a real big cat, an S-Panther.

# Optional special versions

(see chapter DC fans - specials)

*In the catalog, a text box in the upper right corner provides information on the special designs that are technically possible in the fan series.*
*Please note that these special versions are not possible for all voltages and speeds, and not in all combinations. The special versions are designed for specific customers and projects and are usually not available off the shelf.*

max. 44 m³/h

DC axial fans

☐ 60 x 25 mm



- **Material:** Housing: GRP[1] (PBT) Impeller: GRP[1] (PA)
- **Direction of air flow:** Exhaust over struts
- **Direction of rotation:** Clockwise, seen on rotor
- **Connection:** Via single wires AWG 22, TR 64
- **Highlights:** Developed for applications with demanding environmental requirements
- **Mass:** 70 g

- **Possible special versions:**
  (See chapter DC fans - specials)
  - Speed signal
  - Go- / NoGo-alarm
  - Alarm with limit speed
  - External temperature sensor
  - PWM control input
  - Analog control input
  - Humidity protection
  - Salt fog protection
  - Degree of protection: IP 54 / IP 68

Possible special designs are depicted on the catalog page.

**Speed signal /2, /12**
The fan uses a separate wire to output information about its speed, and thus about the speed of the rotor. For technical details, please refer to page 178 and the following.

**Go- / NoGo alarm /37, /39**
The fan uses a separate wire to output a static signal when it is stationary, thus providing information about whether or not the rotor is turning. For technical details, please refer to page 182 and the following.

**Alarm with speed limit /17, /19**
When one of the speeds defined in the fan electronics is undershot, the fan outputs a static signal providing information that the set speed limit was undershot. For technical details, please refer to page 180 and the following.

**External temperature sensor**
An NTC resistor (negative temperature coefficient) is attached to the fan via a separate wire and the fan changes its speed depending on the temperature on the NTC. For technical details, please refer to page 184.

**Internal temperature sensor**
In this case, the NTC is integrated into the fan and the fan changes its speed depending on the temperature at the NTC. For technical details, please refer to page 184.

**PWM control input**
The speed of the fan can be changed via a pulse-width-modulated signal. This signal is applied to a specially provided wire. For technical details, please refer to page 185.

**Analog control input**
The speed of the fan can be changed via a control voltage. This control voltage is applied to a specially provided wire. For technical details, please refer to page 185.

**Multi-option control input**
The fan has a control input that the user can trigger either using a PWM signal, an analog signal, or a variable resistor. For technical details, please refer to page 186.

**Moisture protection**
Protection for the fan electronics against moisture and condensation. For technical details, please refer to page 188.

**Degree of protection IP 54* / IP 68***
Protection of motor and circuit board against splashed water and moisture. For technical details, please refer to page 188.

**Salt spray protection**
Protection of fan against the damaging effects of salt spray. For technical details, please refer to page 188.

**Direction of rotation**
On many variants, the direction of rotation can be changed via a control input.

* IP = International degree of protection marking
For AC fans max. IP 65 available.

# Types of fans and their function

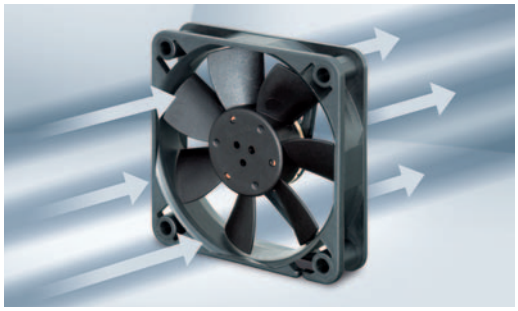

**Axial fans:**

**High air flow with medium to relatively high pressure increase**

The air flow in axial fans with an impeller that is similar to a propeller is conducted largely parallel to the axis of rotation, in other words in the axial direction. Axial fans with free air delivery at zero static pressure have the lowest power input that rises with increasing back pressure. Axial fans for cooling of electronic equipment are mostly equipped with external housing. The electric motor is integrated in the fan hub. This compact design allows space-saving accommodation of all devices. The flange is equipped with mounting holes.

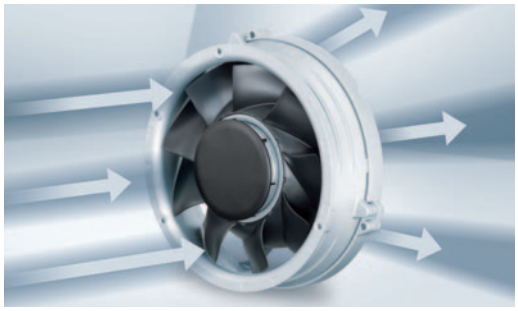

**Diagonal fans:**

**High air flow at relatively high pressure increase**

At first glance diagonal fans only differ slightly from axial fans. Intake is axial, whereas exhaust is diagonal. Due to the conical shape of the wheel and housing, the air is pressurized more in the diagonal fan. In direct comparison with axial fans of the same size and comparable performance, these fans are distinguished by the lower operating noise at high pressures.

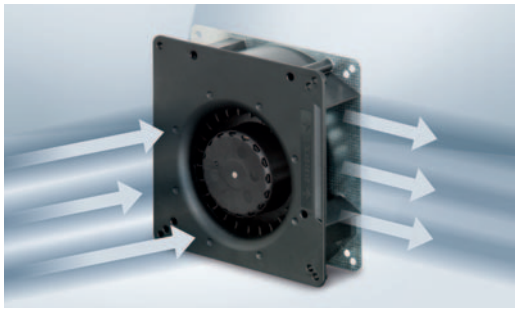

**Centrifugal fans:**

**High pressure increase at limited flow rate**

Generally, many cooling tasks can be performed excellently by axial and/or diagonal fans. But if the cooling airflow has to be deflected at an angle of 90°, for example, or if even greater pressure increase is necessary, centrifugal fans are more effective. For your application, ebm-papst offers not only complete centrifugal fans, but also motor/impeller combinations without external housing.

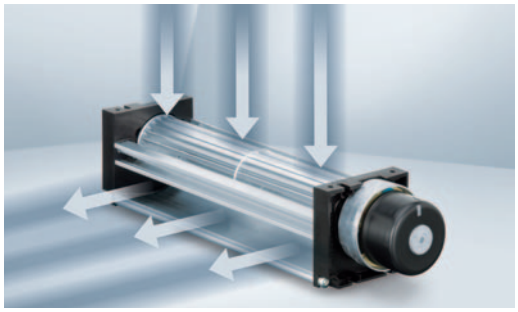

**Tangential fans:**

**High air flow with low pressure increase**

Tangential fans are used especially to produce a wide airflow distribution through devices. The air flows through the roller-shaped impellers twice in the radial direction: in the intake area from the outside to the inside and in the outflow area from the inside to the outside. Whirls form in the roller due to the vanes, which guarantee a steady flow of air through the impeller.

# Selecting the correct fan

**1. Dissipated energy**

A large amount of the energy consumed by electrical and electronic devices is converted to heat. So when selecting the correct fan, it is important to determine the dissipated energy that must be removed. The electrical power consumption of the unit to be cooled often represents a suitable value for this purpose.

**2. Admissible temperature increase**

The air flow that the selected fan is required to generate, is determined by the dissipated energy and the admissible heating (ΔT) of the cooling airflow (from entry to exit of the device to be cooled). The maximum admissible ΔT depends greatly on the temperature sensitivity of the individual parts of the device.

For example, ΔT = 5K means that the average cooling airflow leaving the device to be cooled may be only 5°C warmer than the ambient temperature. This requires a lot of air. A lower air flow rate is sufficient if a higher temperature difference (e.g. ΔT = 20K), can be tolerated.

**3. Required cooling airflow**

- In the diagram below, a horizontal line is drawn from the dissipated energy to intersect with the selected ΔT line.
- Read down from this point to obtain the required value for the cooling airflow. The diagram is based on the following formula:

$$q_V = \frac{P_V}{C_{PL} \cdot \rho_L \cdot \Delta T}$$

**4. Optimum operating range**

But the fan you are looking for must also be able to deliver a suitable static pressure increase Δpf, in order to force the cooling air through the device. So a fan must be selected that provides the required air flow performance within its optimum operating range (see also the air performance curves under technical data).

**5. Fan selection**

If more than one fan meets your requirements, the sound level, space requirements, economy, and ambient conditions will assist in making the final choice.

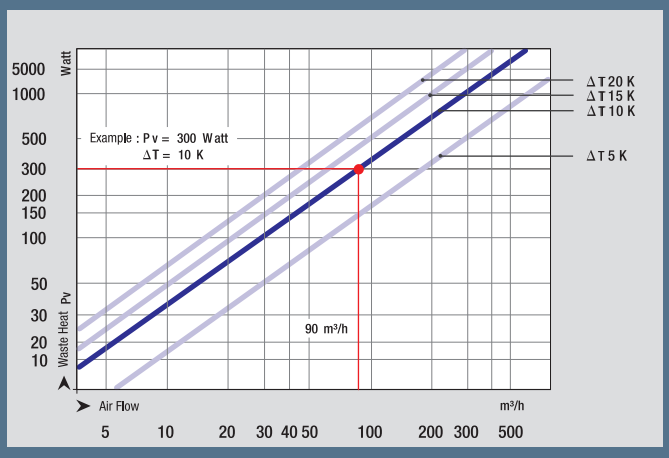


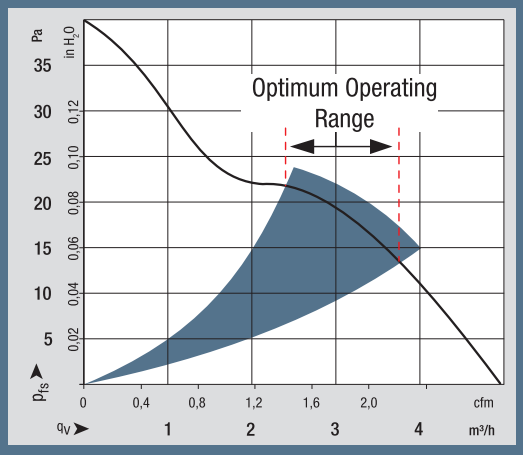


**Definitions**

$P_V$ = amount of heat to be dissipated in [W]
$C_{PL}$ = specific heat capacity of air in [J/kg/K]
$C_{PL}$ = 1010 [J/kg/K]

$\rho_L$ = air density in [kg/m³]
$\rho_L$ = 1,2 kg/m³
$\Delta T = T_1 - T_2$ temperature difference in [K] between inlet and outlet



ebmpapst

# Fan installation

**Intake or exhaust side installation**

Under ideal conditions, the operating point is represented as the intersection between the fan and loss curves, regardless of whether the fan is positioned at the air intake or exhaust side of the device. In addition to ensuring the required flow rate, several other aspects must be considered for determining an appropriate fan concept. The intake air currents of a fan are mainly laminar, comprising nearly the entire suction area. By contrast, the exhaust air of a fan is generally turbulent and flows in a preferred direction, such as axial for an axial fan.
The turbulence of the exhaust intensifies the heat transfer from components within the air currents, so that installing the fan on the air intake side of the device is recommended for cooling and heating.
Installing the fan at the device intake is also advantageous because the fan will not be subjected to the dissipated heat of the device.
Therefore, it operates at low ambient temperatures and has a greater life expectancy.

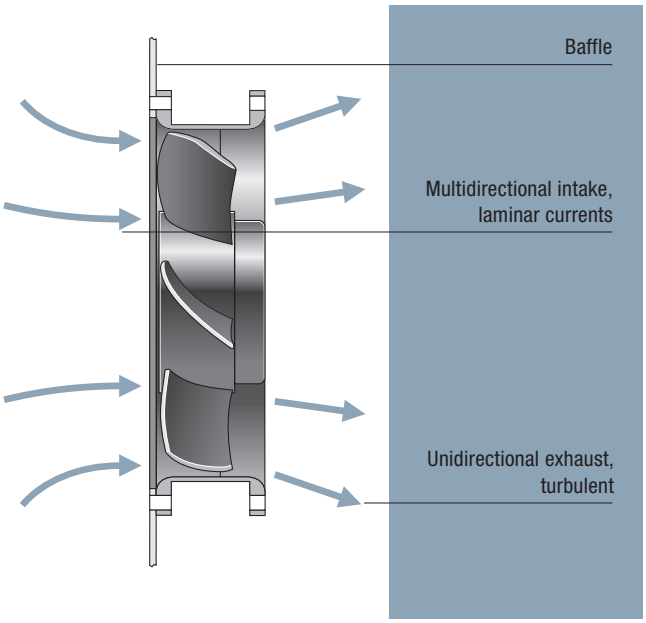


**Information on installation**

When a fan is operated for the first time in an application, the user may have noticed that the air flow in the device was lower than expected. What is the reason for this?

- The values stated in this catalog were determined under optimum, constant, and comparable measurement conditions.
- Ideal installation conditions under which free air intake and exhaust are present are seldom feasible in practice. Quite frequently, the fans have to be installed in close proximity to other components or cabinet panels. As a consequence, the intake and exhaust currents may be restricted, causing the air flow to diminish and the sound level to increase. Fans are particularly sensitive to obstructions that are positioned directly in front of the output cross section, and they often cause an increase in tonal noise.

**Our advice:** The distance between the fan and adjacent components should be at least equal to the installation depth of the fan.

**Accident prevention**

The turning rotor and the high speeds that are sometimes involved mean that our fan products carry an inherent risk of injury. They may only be operated after correct installation and with suitable protective equipment (e.g. with a finger guard). More information can be found in the Internet at: **www.ebmpapst.com/safety**

# Connection instructions for S-Force fans







***Special features of S-Force fans***

*The S-Force series is the most powerful product series. S-Force stands for the highest innovation in motor technology, fluid mechanics and electronics. The one-of-a-kind power density of the products requires special attention to the application at the customer's facility.*

**Service life**

Due to the high currents in the fans, the load on the electrolyte capacitors is greater, which reduces the service life of the capacitor. As a larger or additional capacitor cannot be housed in the fan, the capacitor must be housed in the supply line.

If the power supply of the application has a corresponding capacitor, in some cases it may be possible to omit the external capacitor.

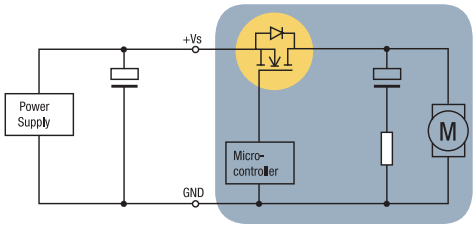


Recommended measure: additional external capacitor (should be installed as close to the fan as possible < 30 cm).

| Fan | Capacitor required |
|---|---|
| **S-Force axial** | |
| 8200 / 3200 JH3-JH4 | no |
| 4100 NH3 / NH4 / NH5 / NH6 | no |
| 4100 NH7 / NH8 | yes |
| 5300 / 5300 TD | no |
| 6300 / 6300 TD / DV 6300 | no |
| 2200 FTD | no |
| 2200 TD | no |
| **S-Force centrifugal** | |
| RET 97 TD | yes |
| RER 120 TD | yes |
| RER 133 TD | no |
| RER 160 NTDHH | yes |
| REF 175 TD | no |
| RER 175 TD | no |
| RER 190 TD / RG 190 TD | no |
| RER 220 TD / RG 220 TD | no |
| RER 225 TDM / RG 225 TDM | no |
| RER 225 TD / RG 225 TD | no |

**Recommended capacitors**

We recommend using the following capacitors from Rubycon:

24 VDC:

50 ZL 680 µF; 12.5 mm x 30 mm or

50 ZLH 680 µF 12.5 mm x 30 mm

48 VDC:

100 YXG 470 µF; 16 mm x 35.5 mm or

100 ZLH 470 µF 16 mm x 31.5 mm

Other capacitors with equal or greater capacitance and equal or lower serial resistance can also be used.

ebm-papst St. Georgen has the following capacitors in stock:

24 VDC: 1000 µF / 50 V, 16 mm x 25 mm

Part number: 992 0354 000 (LZ 354)

48 VDC: 680 µF / 100 V, 18 mm x 40 mm

Part number: 992 0355 000 (LZ 355)

# Service life

***Service life data from ebm-papst St. Georgen***

*Our fans catalog gives three different values for the service life of each product. The first column usually states the service life $L_{10}$ at 40 °C. the second column usually states the service life $L_{10}$ at $T_{max}$. Exceptions are marked in the column headings. The third column states the new value, life expectancy $L_{10IPC}$ (40 °C).*

| Sound power level | Sinter. sleeve bearings ▫ / Ball bearings ■ | Input power | Nominal speed | Temperature range | Service life $L_{10}$ (40 °C) ebm-papst Standard | Service life $L_{10}$ ($T_{max}$) ebm-papst Standard | Life expectancy $L_{10IPC}$ (40 °C) see page 15 | Curve |
|---|---|---|---|---|---|---|---|---|
| Bel(A) | ▫ / ■ | Watts | rpm | °C | Hours | Hours | | |
| 5,2 | ■ | 1,8 | 5 900 | -20...+70 | 85 000 / 42 500 | 142 500 | | ① |
| 5,4 | ■ | 1,5 | 6 300 | -20...+70 | 85 000 / 42 500 | 142 500 | | ② |

Example of the service life figures on the catalog page.

### Service life $L_{10}$ (40 °C) and $L_{10}$ ($T_{max}$)

The values given in the first two columns have been derived from intensive, in-house service life endurance tests in which our products are operated in various positions at 40 °C and 70 °C until they fail. A fan is deemed to have failed when it deviates from its defined air flow and speed values, or when the operating noise becomes noticeable. Such tests can take several years before a representative number of failures has been registered, and even today, some fans are still in the process of endurance testing, even though the test began early in the 1980s. These fans are proof of the legendary "made by ebm-papst" reliability.

Test results are presented in a diagram and the service life of the product $L_{10}$ at the temperature tested is determined based on the Weibull distribution.

These tests have given us years of experience in the way various design parameters and temperatures can affect the service life of a product. Data for service life at various temperatures for new products can be stated with a very high degree of precision based on tests, product specifications, and commonalities in the design of the product.

### Life expectancy $L_{10IPC}$ (40 °C)

The new third service life column states the life expectancy $L_{10IPC}$. This information is based on the international standard IPC 9591. Again here, the foundations for the service life values are our service life endurance tests at high ambient temperatures. The service life at temperatures below the test temperatures is calculated using fixed factors. This method produces much higher service life values, especially at room temperature (see diagram on right).

**Summary:**

The life span calculations have been carried out to the best of our knowledge and are based on experience gained by ebm-papst. The specified $L_{10}$ (40 °C), $L_{10}$ ($T_{max}$) and $L_{10IPC}$ (40 °C) values all allow statements to be made about the theoretical calculated service life under certain assumptions. The values determined here are extrapolations from our own service life tests and from statistical variables. In the respective customer applications, there may be different influencing factors that cannot be included in the calculations due to their complexity. The service life information is explicitly not a guarantee of service life, but strictly a theoretical quality figure.



Fans in an endurance test cabinet at ebm-papst St. Georgen.
1500 fans are operated in temperature cabinets until they fail.

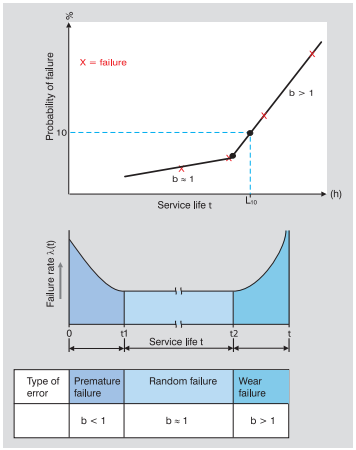


Bathtub curve and Weibull distribution.

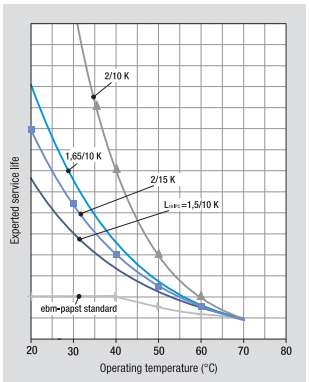


Example of the influence of factors from various manufacturers on the life expectancy.

# Definitions

**Nominal voltage** [volts]
The voltage at which the nominal values (the table values listed in this catalog) were determined. The fan operation for DC fans is not limited to the nominal voltage. Fan speed and fan performance can vary according to the admissible voltage range that is specified on the nameplate of each fan. Please note that this is not a pulsed or modulated DC voltage.

**Frequency** [Hz]
ebm-papst AC fans are made for operating frequencies of 50 Hz or 60 Hz. Their technical data changes accordingly.

**Air flow** [$m^3/h$, cfm]
The air performance of the fan in free air operation, i.e. the fan blows into the free space without static pressure increase.

**Fan curves**
The fan curves are determined in accordance with DIN ISO 5801 specifications on a dual-chamber test stand with intake side measurement. This measurement technique closely approximates the operating conditions experienced in typical applications for fans and yields realistic performance curves. The curves apply to an air density of $\rho$ =1.2 kg/$m^3$ corresponding to an air pressure of 1013 mbar at 20 °C. Variations in air density affect pressure generation, but not the flow rate. The pressure generated at other air densities can be estimated with the formula $\Delta\rho 2 = \Delta\rho 1$ ($\rho 2$ / $\rho 1$).
The nominal speed values, air flow and power consumption listed in the table were measured in free air operation with horizontal shaft at an ambient temperature of 20 °C - 25 °C, air density $\rho$ =1.2 kg/$m^3$ after a warmup period of 5 min.

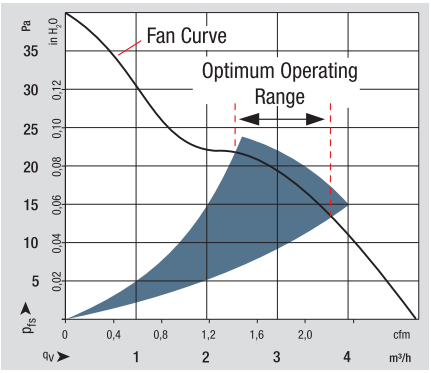


**Optimum operating range**
The optimum operating range is always indicated in the colored area in the air performance diagrams. In this range the fans operate best with respect to efficiency and sound level. Within this optimum operating range the sound level only fluctuates slightly.

**Noise** [dB(A), Bel(A)]

**1. Sound pressure level – dB(A)**
Noise ratings of the fan in free air operation, i.e. at maximum flow rate.

**2. Sound power level 1 Bel(A) = 10 dB(A)**
Extent of the overall sound radiation of the fan. The sound power level is determined in the optimum operating range.

**PAPST Sintec® sleeve bearings**
A particularly economical bearing system with excellent advantages:
– Very precise, large sintered bearings
– Low running noise
– High service life expectancy
– Resistant to shock and vibration

**Ball bearings**
Precision ball bearings for particularly high ambient temperatures and high service life expectancy.

**Power consumption** [watts]
Input performance of the fan motor when operating free blowing at nominal voltage. Depending on the operating condition in the application, the power consumption may be significantly higher.

**Temperature range** [°C]
The admissible ambient temperature range within which the fan can be expected to run continuously.

**Service life** [h]

**Service life $L_{10}$ at 40 °C and $T_{max}$**
Standard figures for service life at ebm-papst. These two temperatures are based on intensive, in-house endurance tests and on experience from more than 70 years developing fans.

**Life expectancy $L_{10IPC}$ (40 °C)**
Information calculated in line with the standard IPC 9591. Data based on the internal life expectancy at 70 °C, more optimistically extrapolated to 40 °C.

**We expressly state that none of the information or data in this catalog is to be construed as a guarantee or warranty of properties.**

**Unit conversion**

| Air flow | Pressure |
|---|---|
| 1 cfm = 1.7 $m^3/h$ | 1 Pa = 1x$10^{-5}$ bar |
| 1 l/s = 3.6 $m^3/h$ | 1 inch $H_2O$ = 249 Pa |
| 1 l/min = 0.06 $m^3/h$ | 1 mm $H_2O$ = 9.81 Pa |

Subject to technical changes.
We do not support aerospace applications with our products.
German and international patents (registered designs and utility models).
ebm-papst is a registered trademark of ebm-papst Mulfingen GmbH & Co. KG.
PAPST, SINTEC, VARIOFAN and Vario-Pro are registered trademarks of ebm-papst St. Georgen GmbH & Co. KG.

# Standard test equipment to determine the fan characteristics

## Pressure/air flow

**Blow-down test facility acc. to ISO 5801**

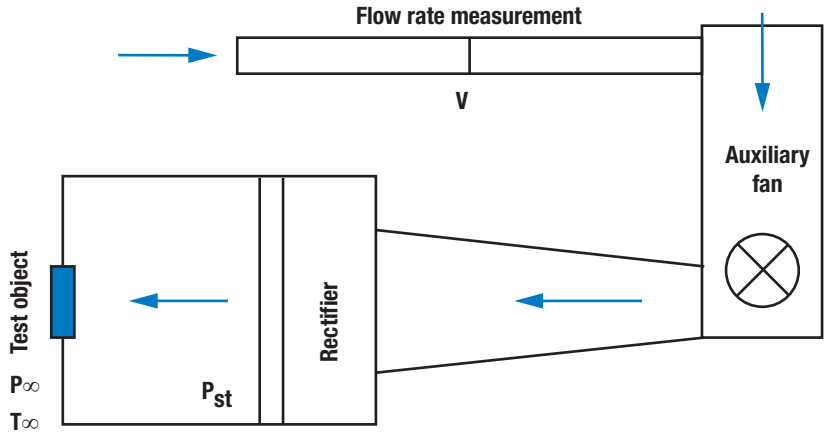


## Sound power level pressure/air flow:

**Outlet side regulated test rig in semi-anechoic chamber according to ISO 10302**

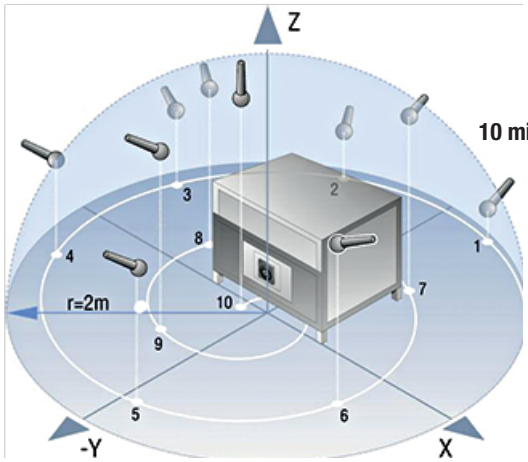


10 microphones (r = 2 m)

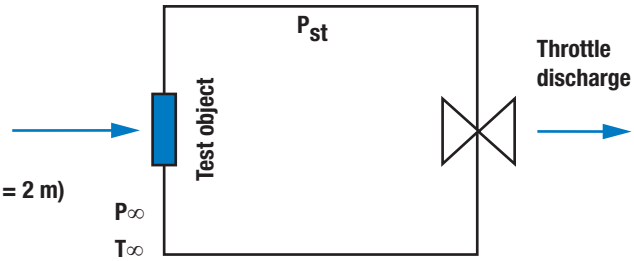

# Type code

## 3-digit DC axial fan e.g. 412 FM

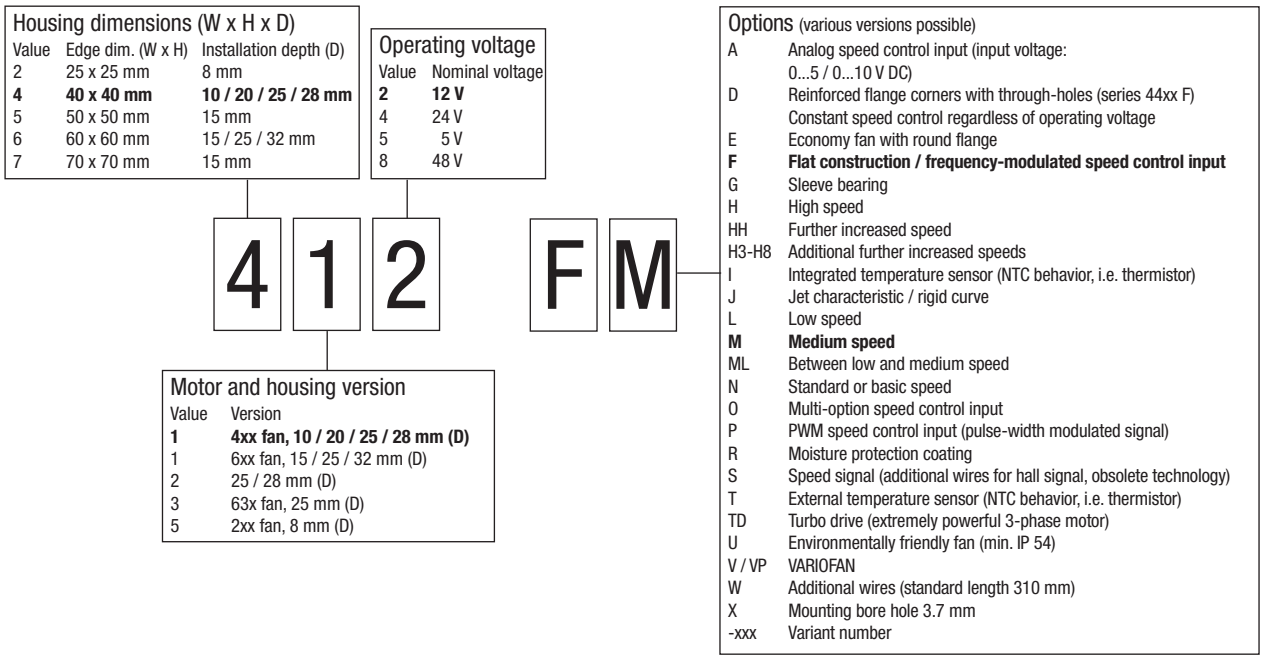


**Housing dimensions (W x H x D)**

| Value | Edge dim. (W x H) | Installation depth (D) |
|---|---|---|
| 2 | 25 x 25 mm | 8 mm |
| **4** | **40 x 40 mm** | **10 / 20 / 25 / 28 mm** |
| 5 | 50 x 50 mm | 15 mm |
| 6 | 60 x 60 mm | 15 / 25 / 32 mm |
| 7 | 70 x 70 mm | 15 mm |

**Operating voltage**

| Value | Nominal voltage |
|---|---|
| **2** | **12 V** |
| 4 | 24 V |
| 5 | 5 V |
| 8 | 48 V |

**Motor and housing version**

| Value | Version |
|---|---|
| **1** | **4xx fan, 10 / 20 / 25 / 28 mm (D)** |
| 1 | 6xx fan, 15 / 25 / 32 mm (D) |
| 2 | 25 / 28 mm (D) |
| 3 | 63x fan, 25 mm (D) |
| 5 | 2xx fan, 8 mm (D) |

**Options** (various versions possible)

| | |
|---|---|
| A | Analog speed control input (input voltage: 0...5 / 0...10 V DC) |
| D | Reinforced flange corners with through-holes (series 44xx F) Constant speed control regardless of operating voltage |
| E | Economy fan with round flange |
| **F** | **Flat construction / frequency-modulated speed control input** |
| G | Sleeve bearing |
| H | High speed |
| HH | Further increased speed |
| H3-H8 | Additional further increased speeds |
| I | Integrated temperature sensor (NTC behavior, i.e. thermistor) |
| J | Jet characteristic / rigid curve |
| L | Low speed |
| **M** | **Medium speed** |
| ML | Between low and medium speed |
| N | Standard or basic speed |
| O | Multi-option speed control input |
| P | PWM speed control input (pulse-width modulated signal) |
| R | Moisture protection coating |
| S | Speed signal (additional wires for hall signal, obsolete technology) |
| T | External temperature sensor (NTC behavior, i.e. thermistor) |
| TD | Turbo drive (extremely powerful 3-phase motor) |
| U | Environmentally friendly fan (min. IP 54) |
| V / VP | VARIOFAN |
| W | Additional wires (standard length 310 mm) |
| X | Mounting bore hole 3.7 mm |
| -xxx | Variant number |

## 4-digit DC axial fan, e.g. 4312 GM

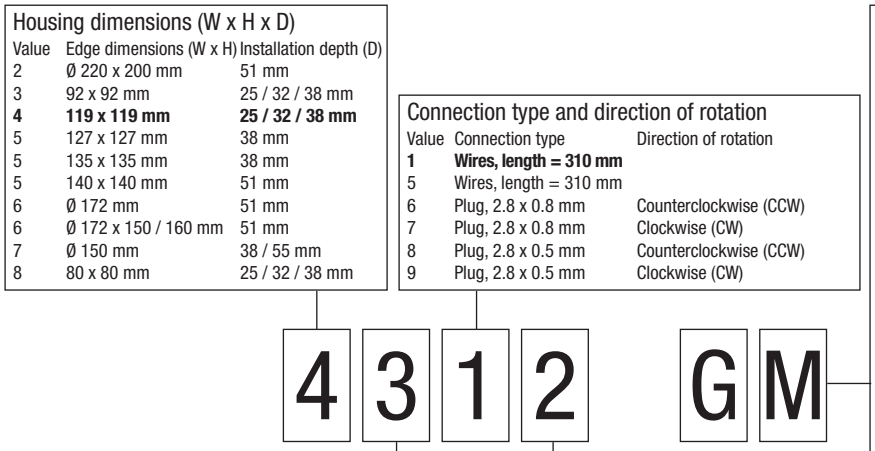


**Housing dimensions (W x H x D)**

| Value | Edge dimensions (W x H) | Installation depth (D) |
|---|---|---|
| 2 | Ø 220 x 200 mm | 51 mm |
| 3 | 92 x 92 mm | 25 / 32 / 38 mm |
| **4** | **119 x 119 mm** | **25 / 32 / 38 mm** |
| 5 | 127 x 127 mm | 38 mm |
| 5 | 135 x 135 mm | 38 mm |
| 5 | 140 x 140 mm | 51 mm |
| 6 | Ø 172 mm | 51 mm |
| 6 | Ø 172 x 150 / 160 mm | 51 mm |
| 7 | Ø 150 mm | 38 / 55 mm |
| 8 | 80 x 80 mm | 25 / 32 / 38 mm |

**Connection type and direction of rotation**

| Value | Connection type | Direction of rotation |
|---|---|---|
| **1** | **Wires, length = 310 mm** | |
| 5 | Wires, length = 310 mm | |
| 6 | Plug, 2.8 x 0.8 mm | Counterclockwise (CCW) |
| 7 | Plug, 2.8 x 0.8 mm | Clockwise (CW) |
| 8 | Plug, 2.8 x 0.5 mm | Counterclockwise (CCW) |
| 9 | Plug, 2.8 x 0.5 mm | Clockwise (CW) |

**Motor and housing version**

| Value | Version |
|---|---|
| 1 | 38 mm (D) |
| 2 | 38 mm (D) |
| **3** | **32 mm (D)** |
| 4 | 25 / 38 / 51 mm (D) |

**Operating voltage**

| Value | Nominal voltage |
|---|---|
| **2** | **12 V** |
| 4 | 24 V |
| 6 | 36 V |
| 8 | 48 V |

**Options** (various versions possible)

| | |
|---|---|
| A | Analog speed control input (input voltage: 0...5 / 0...10 V DC) |
| D | Reinforced flange corners with through-holes (series 44xx F) Constant speed control regardless of operating voltage |
| DV | Diagonal Venturi fan |
| E | Economy fan with round flange |
| F | Flat construction / frequency-modulated speed control input |
| **G** | **Sleeve bearing** |
| H | High speed |
| HH | Further increased speed |
| H3-H8 | Additional further increased speeds |
| I | Integrated temperature sensor (NTC behavior, i.e. thermistor) |
| J | Jet characteristic / rigid curve |
| L | Low speed |
| **M** | **Medium speed** |
| ML | Between low and medium speed |
| N | Standard or basic speed, new design |
| O | Multi-option speed control input |
| P | PWM speed control input (pulse-width modulated signal) |
| R | Moisture protection coating |
| S | Speed signal (additional wires for hall signal, obsolete technology) |
| T | External temperature sensor (NTC behavior, i.e. thermistor) |
| TD | Turbo drive (extremely powerful 3-phase motor) |
| U | Environmentally friendly fan (min. IP 54) |
| V / VP | VARIOFAN |
| W | Additional wires (standard length 310 mm) |
| X | Mounting bore hole 3.7 mm |
| -xxx | Variant number |

All measurements are given in mm.

# Type code

## DC centrifugal fan e.g. RER 160-28/12 N

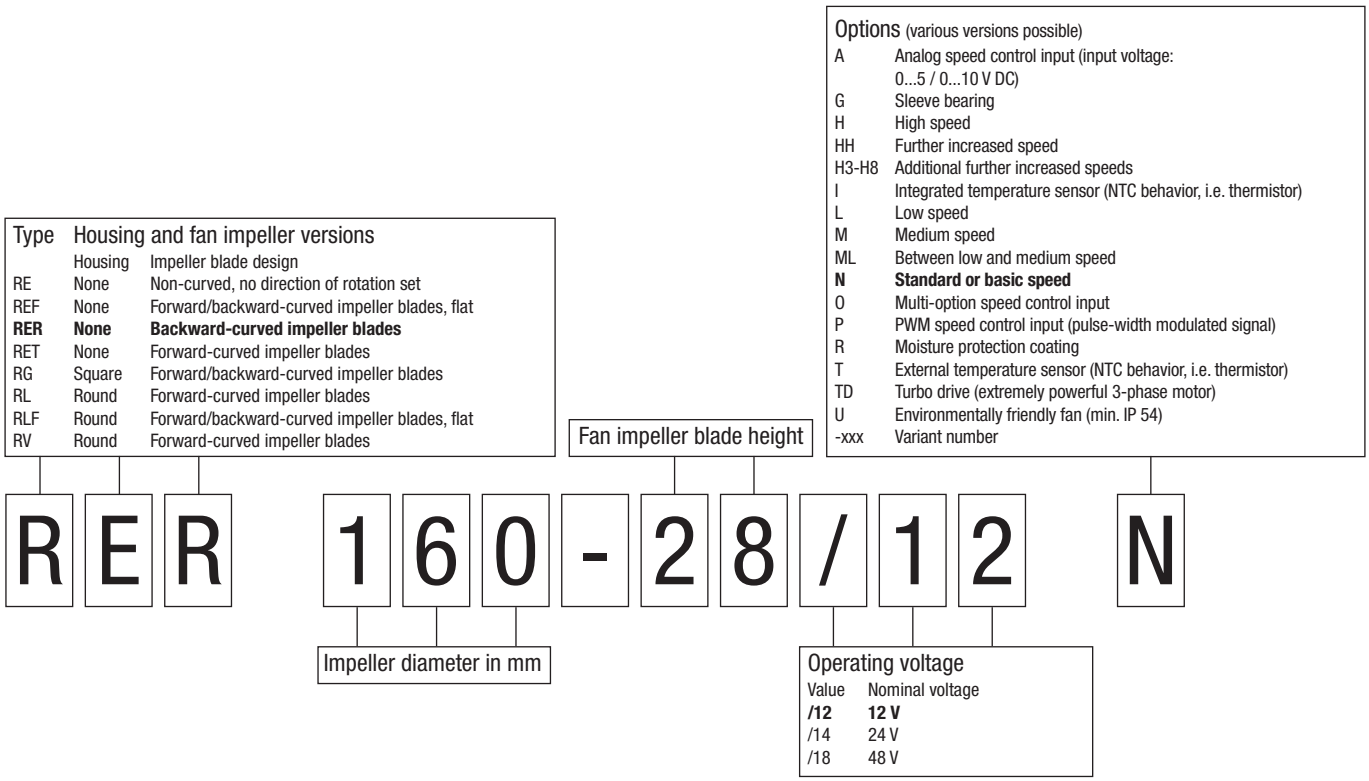


## Crossflow blower e.g. QG 030-148/12

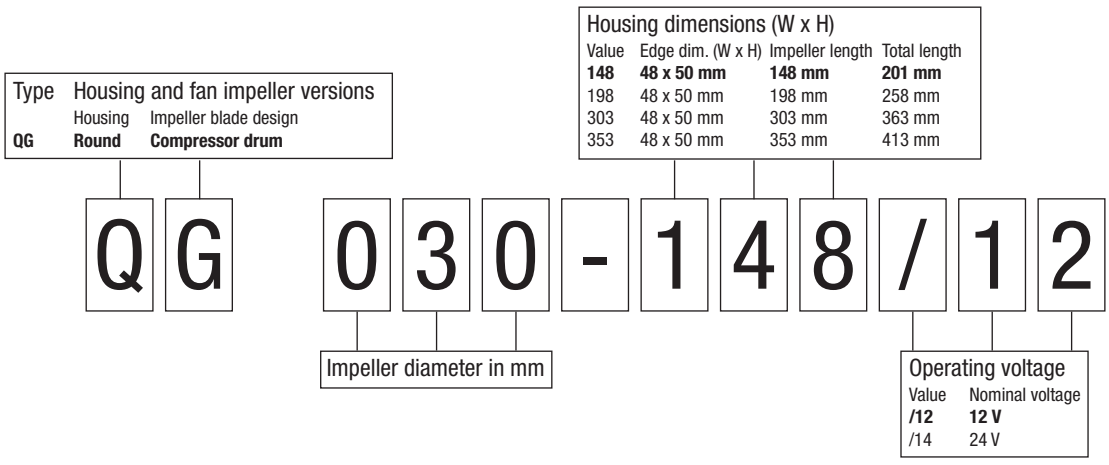


All measurements are given in mm.

# Type code

## 4-digit GreenTech EC tubeaxial fans axial fan e.g. ACi 4420 HH




**Housing dimensions (W x H x D)**

| Value | Edge dim. (W x H) | Installation depth (D) |
|---|---|---|
| 1 | Ø 98.5 mm | 130 mm |
| 3 | 92 x 92 mm | 38 mm |
| **4** | **119 x 119 mm** | **25 / 32 / 38 mm** |
| 6 | Ø 172 | 51 mm |
| 8 | 80 x 80 mm | 32 mm |

**Operating voltage**

| Value | Nominal voltage | Frequency | Version |
|---|---|---|---|
| 0 | 115 / 230 V | 50 / 60 Hz | Wide voltage range input (85-265 V AC) |
| 1 | 115 V | 50 Hz | |
| **2** | **230 V** | **50 Hz** | |

**Options** (various versions possible)

| | |
|---|---|
| A | Analog speed control input (input voltage: 0...5 / 0...10 V DC) |
| F | Flat construction / frequency-modulated signal |
| G | Sleeve bearing |
| H | High speed |
| **HH** | **Further increased speed** |
| I | Integrated temperature sensor (NTC behavior, i.e. thermistor) |
| J | Jet characteristic / rigid curve |
| L | Low speed |
| M | Medium speed |
| ML | Between low and medium speed |
| N | Standard or basic speed |
| P | PWM speed control input (pulse-width modulated signal) |
| R | Moisture protection coating |
| T | External temperature sensor (NTC behavior, i.e. thermistor) |
| U | Environmentally friendly fan (min. IP 54) |
| -xxx | Variant number |

**Basic design**

| Value | Version |
|---|---|
| AC | DC basic fan with integrated AC/DC power supply |
| **ACi** | **EC technology (electronics completely integrated)** |

**Motor and housing version**

| Value | Version |
|---|---|
| 0 | 130 mm (D) |
| 1 | 51 mm (D) |
| 2 | 38 / 51 mm (D) |
| 3 | 32 mm (D) |
| **4** | **25 / 38 mm (D)** |

**Bearing type and insulation class**

| Value | Bearing type | Insulation class |
|---|---|---|
| **0** | **Ball bearing** | **E** |

## AC axial fan e.g. 3950 L

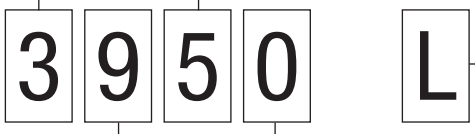


**Housing dimensions (W x H x D)**

| Value | Edge dim. (W x H) | Installat. depth (D) |
|---|---|---|
| **3** | **92 x 92 mm** | **25 / 38 mm** |
| 4 | 119 x 119 mm | 25 / 32 / 38 mm |
| 5 | 127 x 127 mm | 38 mm |
| 5 | 135 x 135 mm | 38 mm |
| 5 | 140 x 140 mm | 51 mm |
| 6 | Ø 172 mm | 51 / 52 mm |
| 7 | Ø 150 mm | 55 mm |
| 7 | Ø 150 x 172 mm | 38 mm |
| 8 | 80 x 80 mm | 38 mm |
| 9 | 119 x 119 mm | 25 mm |

**Operating voltage**

| Value | Nominal voltage | Frequency |
|---|---|---|
| 0 | 115 V | 60 Hz |
| 3 | 115 V | 60 Hz |
| 4 | 115 V | 50 Hz |
| **5** | **230 V** | **50 Hz** |
| 6 | 115 V / 230 V | 50 Hz / 60 Hz |
| 8 | 230 V | 50 Hz / 60 Hz |
| 9 | 230 V | 50 Hz / 60 Hz |

**Options** (various versions possible)

| | |
|---|---|
| A | Intake via bars |
| E | Made by ebm-papst Mulfingen (6xxx, 7xxx range) or round flange |
| H | Speed signal 1 Impulses per 360 degrees (additional hall sensor) |
| **L** | **Low speed** |
| M | Medium speed |
| N | Air intake via struts (ø mounting bore hole) |
| R | Moisture protection coating |
| S | Integrated temperature switch |
| T | Mounting bracket |
| U | Environmentally friendly fan (min. IP 54) |
| V | Air exhaust over struts |
| W | Additional wires (standard length 310 mm) |
| X | Mounting bore hole 3.7 mm |
| -xxx | Variant number |
| Z | Air exhaust over struts, reinforced flange corners with through-holes |

**Motor and housing version**

| Value | Version |
|---|---|
| 4 | Shaded-pole motor, 55 mm (D) medium speed |
| 5 | Shaded-pole motor, 38 mm (D) medium / high speed |
| 6 | Shaded-pole motor, 38 mm (D) high speed |
| 7 | Shaded-pole motor, 38 mm (D) with mounting bracket |
| 8 | Shaded-pole motor, slow / medium speed |
| **9** | **Shaded-pole motor, 25 / 38 mm (D)** |

**Bearing type and insulation class**

| Value | Bearing type | Insulation class |
|---|---|---|
| **0** | **Sleeve bearing** | **E** |
| 5 | Ball bearing | E |
| 6 | Ball bearing | F |
| 8 | Ball bearing | E |

All measurements are given in mm.

# Type code

## AC centrifugal fan e.g. RER 160-28/56 S

| Type | Housing and fan impeller versions | |
|---|---|---|
| | Housing | Impeller blade design |
| RE | None | Non-curved, no direction of rotation set |
| REF | None | Forward/backward-curved impeller blades, flat |
| **RER** | **None** | **Backward-curved impeller blades** |
| RET | None | Forward-curved impeller blades |
| RG | Square | Forward/backward-curved impeller blades |
| RL | Round | Forward-curved impeller blades |
| RLF | Round | Forward/backward-curved impeller blades, flat |
| RV | Round | Forward-curved impeller blades |

Fan impeller blade height

| Options (various versions possible) | |
|---|---|
| H | Speed signal<br>1 Impulses per 360 degrees (additional magnet sensor and hall sensor) |
| L | Low speed |
| M | Medium speed |
| N | Air intake via struts (ø mounting bore hole) |
| R | Moisture protection coating |
| **S** | **Integrated temperature switch** |
| U | Environmentally friendly fan (min. IP 54) |
| W | Additional wires (standard length 310 mm) |
| -xxx | Variant number |

R E R 1 6 0 - 2 8 / 5 6 S

Impeller diameter in mm

| Operating voltage | | |
|---|---|---|
| Value | Nominal voltage | Frequency |
| /00 | 115 V | 60 Hz |
| /06 | 115 V | 60 Hz |
| /50 | 230 V | 50 Hz |
| **/56** | **230 V** | **50 Hz** |

## DC centrifugal fan e.g. R3G 190-RN 38-01

Note: This type code specifies fans from ebm-papst Mulfingen and can be used to clearly identify and order them:

| Type | Housing and fan impeller versions |
|---|---|
| A | Axial fan |
| S | Axial fan with finger guard |
| W | Axial fan with fan housing |
| V | Axial combination |
| **R** | **Centrifugal fan, single inlet** |
| G | Centrifugal blower, single inlet (with scroll housing) |
| B | Centrifugal fan, dual inlet |
| G | Centrifugal blower, dual inlet (with scroll housing) |
| K | Centrifugal combination |

Impeller diameter in mm

Key for mechanical design

Key for mechanical variants

R 3 G 1 9 0 - R N 3 8 - 0 1

| Number of poles (AC) | |
|---|---|
| 2 | 2-pole |

| Number of cores (DC/EC) | |
|---|---|
| 1 | 1-phase/core |
| **3** | **3-phase/core** |

| Motor type | |
|---|---|
| D | Three-phase motor |
| E | Single-phase motor with motor run capacitor |
| **G** | **DC/EC motor** |

Key for electrical design

All measurements are given in mm.



# DC axial fans




DC axial fan overview 25
DC axial fan / DC diagonal fan 29

# DC axial fans

*Technical information*





**Product line**
ebm-papst offers you the widest full product line of DC axial and diagonal fans from 25 mm to 280 mm in size. Every single type of fan can be optimally integrated in the respective device concept. The highly economical brushless motor technology of these fans provides a unique variety of intelligent innovations at prices that would have been unthinkable a few years ago.

**Electronic protection against reverse polarity**
ebm-papst DC fans have electronically commutated drives with electronic protection against reverse polarity. The electronics are integrated in the fan's impeller hub to save space.

**Product life expectancy**
A distinctive feature of DC fan technology is the amazing product life expectancy. The outstanding efficiency of the brushless drive results in lower heat stress for the bearings, which significantly increases the service life of the fan.

**Degree of protection**
DC fans with sleeve and ball bearings are powered by class E insulated motors. All ebm-papst fans conform to the requirements of degree of protection IP 20. Fans conforming to IP 54 / IP 68 and special degrees of protection are also available.

**Voltage range**
Many of our DC fans can be operated on voltages that are up to 50 % lower and 25 % higher than their nominal voltage (see voltage range in the technical tables). This allows the air performance to be adapted to the cooling requirements and the noise to be reduced, even if the fan does not have a control input.

**Closed-loop speed control and monitoring**
Closed-loop speed control and function monitoring are becoming increasingly important in many applications. ebm-papst offers many fans in the standard design with a control input and open-collector speed signal.

**S-Force**
The S-Force fans with their extremely high blower capacity of up to 1100 $m^3/h$ and pressure increase of up to 1400 pascals are capable of dealing with the extreme heat load. If needed, these fans can produce up to 100 % more output under full load, and they work with a much broader delivery bandwidth than current models. This makes them ideal for equipment and systems with a high density of components. Thanks to intelligent motor features, they can be adapted individually for any application. S-Force fans are available in standard dimensions. The air flow rate is amazing!

**S-Panther**
S-Panther power delivered quietly. Wherever there is need for power and reduced noise, fans from the S-Panther range are the right solution. A strong pressure saddle curve at optimum air flow provides the power of a real big cat, an S-Panther.

# Axial fans for DC operation

## Overview of air performance

| | Dimension | Series | Air flow | Page |
|---|---|---|---|---|
| | mm | | m³/h | |
| | □ 25 x 8 | 250 | 2,3...4,6 | 29 |
| | □ 40 x 10 | 400 F | 6...9 | 30 |
| | □ 40 x 20 | 400 | 10...13,5 | 31 |
| | □ 40 x 28 | 420 J | 24...38 | 32 |
| | □ 50 x 15 | 500 F | 11...20 | 33 |
| | □ 60 x 15 | 600 F | 19...33 | 34 |
| | □ 60 x 25 | 620 | 21...67 | 35 |
| | □ 60 x 25 | 630 | 40...58 | 36 |
| | □ 60 x 25 | 600 N | 21...56 | 37 |
| | □ 60 x 32 | 600 J | 70...82 | 38 |
| | □ 70 x 15 | 700 F | 28...44 | 39 |
| | □ 80 x 25 | 8450 | 32...117 | 40 |
| | □ 80 x 25 | 8400 N | 33...79 | 41 |
| S-Panther | □ 80 x 32 | 8300 N | 32...130 | 42/43 |
| | □ 80 x 38 | 8200 J | 132...222 | 44 |
| | □ 80 x 38 | CoR 8200 J | 232 | 45 |
| | □ 92 x 25 | 3400 N | 61...102 | 46 |
| S-Panther | □ 92 x 32 | 3300 N | 56...133 | 47/48 |
| S-Force | □ 92 x 38 | 3200 J | 130...280 | 49 |
| S-Panther | □ 92 x 38 | 3250 J | 145...270 | 50 |
| | □ 119 x 25 | 4400 F | 94...170 | 51 |
| | Ø 127 | 4400 F | 91 | 52 |
| | □ 119 x 25 | 4400 FN | 200...225 | 53 |
| S-Panther | □ 119 x 32 | 4300 N | 100...285 | 54/55 |

Subject to change

m³/h 10 20 30 40 50 60 70 80 90 100 200 300 400 500 600 700 800 900 1000 2000 2500

# Axial fans for DC operation

## Overview of air performance

| | Dimension | Series | Air flow | Page |
|---|---|---|---|---|
| | mm | | m³/h | |
| | □ 119 x 38 | 4400 | 100...285 | 56/57 |
| | □ 119 x 38 | 4100 N | 160...237 | 58 |
| S-Force | □ 119 x 38 | 4100 NHH..NH6 | 260...440 | 59 |
| S-Force | □ 119 x 38 | 4100 NH7..NH8 | 500...570 | 60 |
| | □ 119 x 38 | DV 4100 | 280 | 61 |
| | □ 127 x 38 | 5200 N | 187...340 | 62 |
| | □ 127 x 38 | DV 5200 | 270...320 | 63 |
| | □ 135 x 38 | 5100 N | 260 | 64 |
| S-Force | □ 140 x 51 | 5300 | 340 | 65 |
| S-Force | □ 140 x 51 | 5300 TD | 410...670 | 66 |
| | Ø 150 x 38 | 7100 N | 308...360 | 67 |
| | Ø 150 x 55 | 7200 N | 360 | 68 |
| | 172x150x51 | 6400 | 350...480 | 69 |
| | 172x150x51 | 6400 TD | 90...900 | 70 |
| | 172x160x51 | DV 6400 | 530 | 71 |
| | 172x160x51 | DV 6400 TD | 100...680 | 72 |
| S-Panther | 172x160x51 | 6300 NTD | 1030 | 73 |
| S-Force | 172x160x51 | 6300 TD | 710...930 | 74 |
| S-Panther | Ø 172 x 51 | 6300 N | 540...685 | 75 |
| S-Panther | Ø 172 x 51 | 6300 NTD | 805...1210 | 76 |
| S-Force | Ø 172 x 51 | 6300 | 395...545 | 77 |
| S-Force | Ø 172 x 51 | 6300 TD | 600...930 | 78 |
| S-Force | Ø 172 x 51 | DV 6300 TD | 630...1100 | 79 |
| S-Force | 220x200x51 | 2200 FTD | 790...1220 | 80 |
| | 225x225x80 | 2200 TD | 1000 | 81 |
| | □ 225 x 80 | K1G 200 | 1020...1245 | 82 |
| | □ 225 x 89 | K3G 200 | 725...1650 | 84 |
| | Ø 250 | W1G 250 | 2070 | 86 |
| | Ø 300 | *1G 300 | 2320...2345 | 88 |

Subject to change

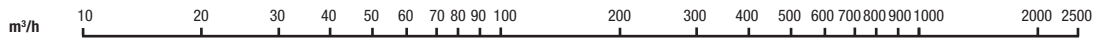




ebmpapst

# Axial fans for DC operation

## Overview of technically feasible designs

| | Dimension | | VDE, UL, CSA | SWITEC sleeve bearings / ball bearings | Speed signal | Go / NoGo alarm | Alarm with speed limit | External temperature sensor | Internal temperature sensor | PWM control input | Analog control input | Multi-options control input | Moisture protection | IP >= 54 | IP 68 | Salt spray protection | Reversible direction of rotation | Page |
|---|---|---|---|---|---|---|---|---|---|---|---|---|---|---|---|---|---|---|
| **Axial fans** | | | | | | | | | | | | | | | | | | |
| | **mm** | **Series** | | | | | | **OPTIONAL** | | | | | | | | | | **P.** |
| | ☐ 25 x 8 | 250 | ja | ▫ | • | – | – | – | – | – | – | – | • | – | – | – | – | 29 |
| | ☐ 40 x 10 | 400 F | ja | ▫ | • | • | – | – | – | – | – | – | • | – | – | – | – | 30 |
| | ☐ 40 x 20 | 400 | ja | ▫ | • | • | – | – | – | • | – | – | • | – | – | – | – | 31 |
| | ☐ 40 x 28 | 420 J | ja | ■ | • | • | • | • | – | • | • | – | • | • | • | • | – | 32 |
| | ☐ 50 x 15 | 500 F | ja | ▫ | • | • | – | – | – | • | – | – | • | – | – | – | – | 33 |
| | ☐ 60 x 15 | 600 F | ja | ▫ | • | • | – | – | – | • | – | – | • | – | – | – | – | 34 |
| | ☐ 60 x 25 | 620 | ja | ■ | • | • | • | • | • | • | • | – | • | – | – | – | – | 35 |
| | ☐ 60 x 25 | 630 | ja | ■ | • | • | • | • | – | • | • | – | • | • | • | • | – | 36 |
| | ☐ 60 x 25 | 600 N | ja | ▫/■ | • | • | – | – | – | – | – | – | • | • | • | – | – | 37 |
| | ☐ 60 x 32 | 600 J | ja | ■ | • | • | – | • | – | • | • | – | • | – | – | – | – | 38 |
| | ☐ 70 x 15 | 700 F | ja | ▫ | • | • | – | – | – | – | – | – | • | – | – | – | – | 39 |
| | ☐ 80 x 25 | 8450 | ja | ■ | • | • | • | • | • | • | • | – | • | – | – | – | – | 40 |
| | ☐ 80 x 25 | 8400 N | ja | ▫/■ | • | • | • | • | • | • | • | – | • | • | • | – | – | 41 |
| *S-Panther* | ☐ 80 x 32 | 8300 N | ja | ■ | • | • | • | • | • | • | • | – | • | • | • | • | – | 42/43 |
| | ☐ 80 x 38 | 8200 J | ja | ■ | • | • | • | • | • | • | • | – | • | • | • | – | – | 44 |
| | ☐ 80 x 38 | CoR 8200 J | ja | ■ | • | • | • | • | • | • | • | – | • | • | – | – | – | 45 |
| | ☐ 92 x 25 | 3400 N | ja | ▫/■ | • | • | • | • | • | • | • | – | • | • | • | – | – | 46 |
| *S-Panther* | ☐ 92 x 38 | 3300 N | ja | ■ | • | • | • | • | • | • | • | – | • | • | • | • | – | 47/48 |
| *S-Force* | ☐ 92 x 38 | 3200 J | ja | ■ | • | • | • | • | • | • | • | – | • | • | • | – | – | 49 |
| *S-Panther* | ☐ 92 x 38 | 3250 J | ja | ■ | • | • | – | • | • | • | • | – | • | • | • | • | – | 50 |
| | ☐ 119 x 25 | 4400 F | ja | ▫/■ | • | • | • | • | • | • | • | – | • | – | – | – | – | 51 |
| | Ø 172 | 4400 F | ja | ▫ | • | • | • | • | • | • | • | – | • | – | – | – | • | 52 |
| | ☐ 119 x 25 | 4400 FN | ja | ■ | • | • | • | • | • | • | • | – | • | – | – | – | – | 53 |
| *S-Panther* | ☐ 119 x 32 | 4300 N | ja | ■ | • | • | • | • | • | • | • | – | • | • | • | • | – | 54/55 |
| | Subject to change | | | | | | | | | | | | | | | | | |

– not yet available
• Available
▫ Sleeve bearings
■ Ball bearings

Please note that these special versions are not possible for all voltages and speeds, and not in all combinations. The special versions are designed for specific customers and projects. As a rule, they are not available off the shelf and are based on minimum quantities.

Please consult your customer support representative about the feasibility of your special variant.

# Axial fans for DC operation

## Overview of technically feasible designs

| | Dimension | | VDE, UL, CSA | SINTEC sleeve bearings / ball bearings | Speed signal | Go / NoGo alarm | Alarm with speed limit | External temperature sensor | Internal temperature sensor | PWM control input | Analog control input | Multi-options control input | Moisture protection | IP >= 54 | IP 68 | Salt spray protection | Reversible direction of rotation | Page |
|---|---|---|---|---|---|---|---|---|---|---|---|---|---|---|---|---|---|---|
| **Axial fans** | | | | | | | | | | | | | | | | | | |
| | mm | Series | | | | | | OPTIONAL | | | | | | | | | | P. |
| | ☐ 119 x 38 | 4400 | ja | ■ | • | • | • | • | • | • | • | – | • | • | – | – | – | 56/57 |
| | ☐ 119 x 38 | 4100 N | ja | ▫/■ | • | • | • | • | • | • | • | – | • | • | • | • | – | 58 |
| S-Force | ☐ 119 x 38 | 4100 NH..NH6 | ja | ■ | • | • | • | • | • | • | • | – | • | • | • | • | – | 59 |
| S-Force | ☐ 119 x 38 | 4100 NH7..NH8 | ja | ■ | • | • | • | • | • | • | • | – | • | – | – | – | – | 60 |
| | ☐ 119 x 38 | DV 4100 | ja | ■ | • | • | • | • | • | • | • | – | • | • | • | • | – | 61 |
| | ☐ 127 x 38 | 5200 N | ja | ■ | • | • | • | • | • | • | • | – | • | • | • | • | – | 62 |
| | ☐ 127 x 38 | DV 5200 | ja | ■ | • | • | • | • | • | • | • | – | • | • | – | • | – | 63 |
| | ☐ 135 x 38 | 5100 N | ja | ■ | • | • | • | • | • | • | • | – | • | • | – | • | – | 64 |
| S-Force | ☐ 140 x 51 | 5300 | ja | ■ | • | • | • | • | • | • | • | – | • | • | – | • | – | 65 |
| S-Force | ☐ 140 x 51 | 5300 TD | ja | ■ | • | • | • | • | • | • | • | • | • | • | – | • | – | 66 |
| | Ø 150 x 38 | 7100 N | ja | ■ | • | • | • | • | • | • | • | – | • | • | • | • | – | 67 |
| | Ø 150 x 55 | 7200 N | ja | ■ | • | • | • | • | • | • | • | – | • | • | • | • | – | 68 |
| | 172 x 150 x 51 | 6400 | ja | ■ | • | • | • | • | • | • | • | – | • | • | – | • | – | 69 |
| | 172 x 150 x 51 | 6400 TD | ja | ■ | • | • | • | • | • | • | • | – | • | • | – | • | • | 70 |
| | 172 x 160 x 51 | DV 6400 | ja | ■ | • | • | • | • | • | • | • | – | • | • | – | • | – | 71 |
| | 172 x 160 x 51 | DV 6400 TD | ja | ■ | • | • | • | • | • | • | • | – | • | • | – | • | • | 72 |
| S-Panther | 172 x 160 x 51 | 6300 NTD | ja | ■ | • | • | • | • | • | • | • | • | • | • | – | • | – | 73 |
| S-Force | 172 x 160 x 51 | 6300 TD | ja | ■ | • | • | • | • | • | • | • | • | • | • | – | • | – | 74 |
| S-Panther | Ø 172 x 51 | 6300 N | ja | ■ | • | • | • | • | • | • | • | • | • | • | • | • | – | 75 |
| S-Panther | Ø 172 x 51 | 6300 NTD | ja | ■ | • | • | • | • | • | • | • | • | • | • | – | • | – | 76 |
| S-Force | Ø 172 x 51 | 6300 | ja | ■ | • | • | • | • | • | • | • | – | • | • | – | • | – | 77 |
| S-Force | Ø 172 x 51 | 6300 TD | ja | ■ | • | • | • | • | • | • | • | • | • | • | – | • | – | 78 |
| S-Force | Ø 172 x 51 | DV 6300 TD | ja | ■ | • | • | • | • | • | • | • | • | • | • | – | • | – | 79 |
| S-Force | Ø 200 x 51 | 2200 FTD | ja | ■ | • | • | • | • | • | • | • | • | • | • | • | • | – | 80 |
| | Ø 200 x 51 | 2200 TD | ja | ■ | • | • | • | • | • | • | • | • | • | • | • | • | – | 81 |
| | ☐ 225 x 80 | K1G 200 | ja | ■ | • | • | • | • | – | • | • | • | • | – | – | • | – | 82 |
| | ☐ 225 x 89 | K3G 200 | ja | ■ | • | • | • | • | – | • | • | • | • | – | – | • | – | 84 |
| | Subject to change | | | | | | | | | | | | | | | | | |

– not yet available ▫ Sleeve bearings
• Available ■ Ball bearings

Please note that these special versions are not possible for all voltages and speeds, and not in all combinations. The special versions are designed for specific customers and projects. As a rule, they are not available off the shelf and are based on minimum quantities.

Please consult your customer support representative about the feasibility of your special variant.



ebmpapst

Max. 4.6 m³/h

# DC axial fans

☐ 25 x 8 mm



- **Material:** Housing: GRP[1] (PBT)
  Impeller: GRP[1] (PA)
- **Direction of air flow:** Exhaust over struts
- **Direction of rotation:** Counterclockwise, looking towards rotor
- **Connection:** Via single wires AWG 28, TR 64
- **Weight:** 5 g

- **Possible special versions:**
  (See chapter DC fans - specials)
  - Speed signal
  - Moisture protection

1) Fiberglass-reinforced plastic

| Series 250<br>VWC0025AUBAS<br>**Nominal data** | Air flow | Air flow | **Nominal voltage** | Voltage range | Sound pressure level | Sound power level | Sintec sleeve bearings<br>Ball bearings | Power consumption | Nominal speed | Temperature range | Service life $L_{10}$ (20 °C)<br>ebm-papst standard<br>Service life $L_{10}$ (60 °C)<br>ebm-papst standard | Life expectancy $L_{10IPC}$<br>(40 °C) see page 15 | Curve |
|---|---|---|---|---|---|---|---|---|---|---|---|---|---|
| **Type** | **m³/h** | **cfm** | **VDC** | **VDC** | **dB(A)** | **Bel(A)** | **□ / ■** | **Watts** | **rpm⁻¹** | **°C** | **Hours** | **Hours** | |
| 255 M | 2.3 | 1.2 | **5** | 4.5...5.5 | 5 | < 3 | ■ | 0.2 | 6 500 | -10...+70 | 45 000 / 17 500 | 47 500 | ① |
| 255 N | 3.5 | 1.9 | **5** | 4.5...5.5 | 16 | < 3 | ■ | 0.4 | 9 600 | -10...+70 | 40 000 / 15 000 | 42 500 | ② |
| 255 H | 4.6 | 2.6 | **5** | 4.5...5.5 | 23 | 4.4 | ■ | 0.6 | 12 000 | -10...+55 | 35 000 / 15 000* | 37 500 | ③ |
| 252 N | 3.4 | 1.9 | **12** | 10...14 | 15 | < 3 | ■ | 0.5 | 9 000 | -10...+70 | 40 000 / 15 000 | 42 500 | ② |
| 252 H | 4.6 | 2.6 | **12** | 10...14 | 23 | 4.4 | ■ | 0.7 | 12 000 | -10...+55 | 35 000 / 15 000* | 37 500 | ③ |

Subject to change

* at 55 °C

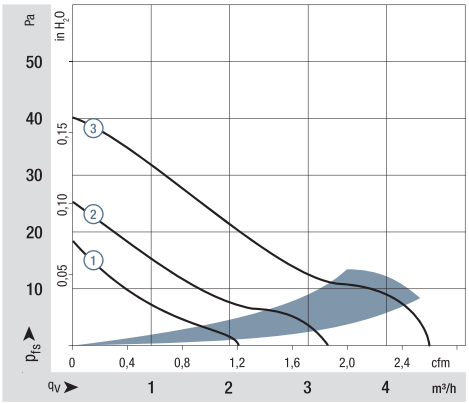


Air performance measured as per: ISO 5801.
Installation category A, without accidental contact.
Noise: Total sound power level $L_{WA}$ ISO 10302 measured on a hemisphere with a radius of 2 m.
Sound pressure level $L_{pA}$ measured at 1 m distance from fan axis.
The values given are applicable only under the specified measuring conditions and may differ depending on the installation conditions.
In the event of deviation from the standard configuration, the parameters must be checked after installation!
For detailed information see
http://www.ebmpapst.com/general conditions

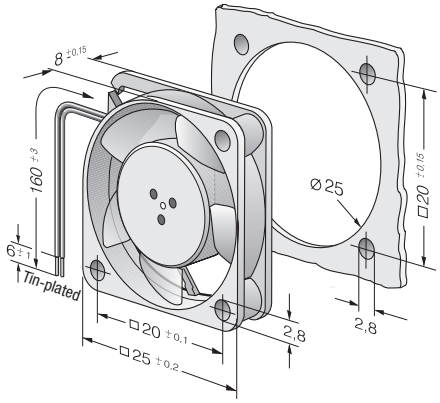

Max. 9 m³/h

# DC axial fans

## ☐ 40 x 10 mm



- **Material:** Housing: GRP[1] (PBT)
  Impeller: GRP[1] (PA)
- **Direction of air flow:** Exhaust over struts
- **Direction of rotation:** Counterclockwise, looking towards rotor
- **Connection:** Via single wires AWG 28, TR 64
- **Highlights:** Some models are suitable for use at high ambient temperatures
- **Weight:** 17 g

- **Possible special versions:**
  (See chapter DC fans - specials)
  - Speed signal
  - Go / NoGo alarm
  - Moisture protection

1) Fiberglass-reinforced plastic

| Series 400 F<br>VWC0040FUDAS<br>**Nominal data** | Air flow | Air flow | **Nominal voltage** | Voltage range | Sound pressure level | Sound power level | Sintec sleeve bearings<br>Ball bearings | Power consumption | Nominal speed | Temperature range | Service life $L_{10}$ (20 °C) ebm-papst standard<br>Service life $L_{10}$ (60 °C) ebm-papst standard | Life expectancy $L_{10IPC}$ (40 °C) see page 15 | Curve |
|---|---|---|---|---|---|---|---|---|---|---|---|---|---|
| **Type** | **m³/h** | **cfm** | **VDC** | **VDC** | **dB(A)** | **Bel(A)** | **□ / ■** | **Watts** | **rpm⁻¹** | **°C** | **Hours** | **Hours** | |
| 405 F | 8 | 4.7 | **5** | 4.5...5.5 | 22.1 | 4.4 | ■ | 0.7 | 5 400 | -20...+70 | 45 000 / 17 500 | 47 500 | ② |
| 405 FH | 9 | 5.3 | **5** | 4.5...5.5 | 26.0 | 4.6 | ■ | 0.9 | 6 000 | -20...+70 | 45 000 / 17 500 | 47 500 | ③ |
| 412 FM | 6 | 3.5 | **12** | 10...14 | 17.0 | 3.8 | ■ | 0.5 | 4 300 | -20...+70 | 45 000 / 17 500 | 47 500 | ① |
| 412 F | 8 | 4.7 | **12** | 10...14 | 22.1 | 4.4 | ■ | 0.7 | 5 400 | -20...+70 | 45 000 / 17 500 | 47 500 | ② |
| 412 FH | 9 | 5.3 | **12** | 10...14 | 26.0 | 4.6 | ■ | 0.8 | 6 000 | -20...+70 | 45 000 / 17 500 | 47 500 | ③ |
| 414 F | 8 | 4.7 | **24** | 20...28 | 22.1 | 4.4 | ■ | 0.8 | 5 400 | -20...+70 | 45 000 / 17 500 | 47 500 | ② |
| 414 FH | 9 | 5.3 | **24** | 21.6...26.4 | 26.0 | 4.4 | ■ | 0.9 | 6 000 | -20...+70 | 45 000 / 17 500 | 47 500 | ③ |
| Model with temperature range up to +85 °C. | | | | | | | | | | | | | |
| 412 FM-074 | 6 | 3.5 | **12** | 10...14 | 17.0 | 3.8 | ■ | 0.4 | 4 300 | -20...+85 | 45 000 / 17 500 | 47 500 | ① |
| 412 F-130 | 8 | 4.7 | **12** | 10...14 | 22.1 | 4.4 | ■ | 0.6 | 5 400 | -20...+85 | 45 000 / 17 500 | 47 500 | ② |
| 412 FH-132 | 9 | 5.3 | **12** | 10...14 | 26.0 | 4.6 | ■ | 0.8 | 6 000 | -20...+85 | 45 000 / 17 500 | 47 500 | ③ |

Subject to change

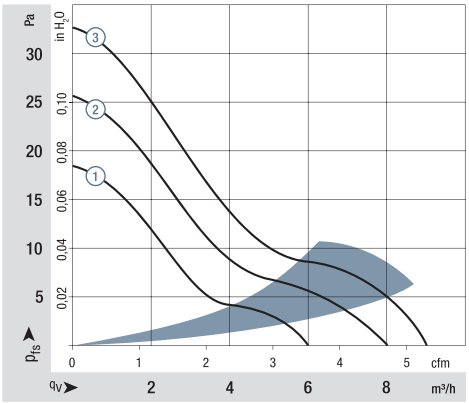


Air performance measured according to: ISO 5801.
Installation category A, without contact protection.
Noise: Total sound power level $L_{WA}$ ISO 10302 measured on a hemisphere with a radius of 2 m.
Sound pressure level $L_{pA}$ measured at 1 m distance from fan axis.
The values given are applicable only under the specified measuring conditions and may differ depending on the installation conditions.
In the event of deviation from the standard configuration, the parameters must be checked after installation!
For detailed information see
http://www.ebmpapst.com/general conditions

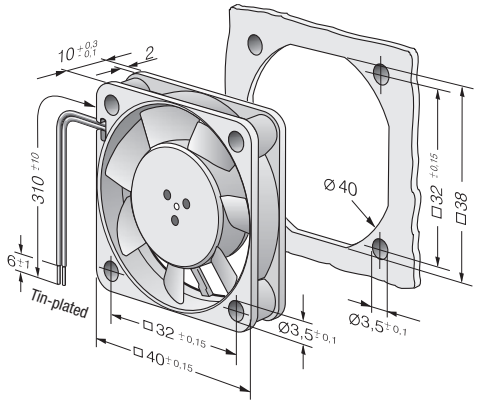




ebmpapst

Max. 13.5 m³/h

# DC axial fans

## ☐ 40 x 20 mm

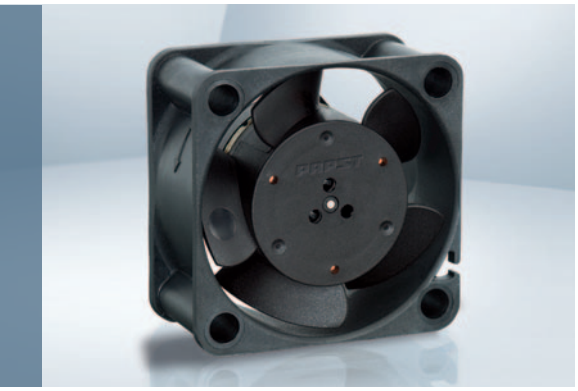

- **Material:** Housing: GRP[1] (PBT)
  Impeller: GRP[1] (PA)
- **Direction of air flow:** Exhaust over struts
- **Direction of rotation:** Counterclockwise, looking towards rotor
- **Connection:** Via single wires AWG 28, TR 64
- **Highlights:** Some models are suitable for use at high ambient temperatures
- **Weight:** 27 g

- **Possible special versions:**
  (See chapter DC fans - specials)
  - Speed signal
  - Go / NoGo alarm
  - PWM control input
  - Moisture protection

1) Fiberglass-reinforced plastic

Series 400
VWC0040YUDBS

| Nominal data | Air flow | Air flow | Nominal voltage | Voltage range | Sound pressure level | Sound power level | Sintec sleeve bearings Ball bearings | Power consumption | Nominal speed | Temperature range | Service life $L_{10}$ (20 °C) ebm-papst standard / Service life $L_{10}$ (60 °C) ebm-papst standard | Life expectancy $L_{10IPC}$ (40 °C) see page 15 | Curve |
|---|---|---|---|---|---|---|---|---|---|---|---|---|---|
| **Type** | **m³/h** | **cfm** | **VDC** | **VDC** | **dB(A)** | **Bel(A)** | **□ / ■** | **Watts** | **rpm⁻¹** | **°C** | **Hours** | **Hours** | |
| 405 | 10.0 | 5.9 | **5** | 4.5...5.5 | 18 | 3.8 | ■ | 0.9 | 6 000 | -20...+70 | 50 000 / 20 000 | 52 500 | ① |
| 412 | 10.0 | 5.9 | **12** | 10...14 | 18 | 3.8 | ■ | 0.8 | 6 000 | -20...+70 | 50 000 / 20 000 | 52 500 | ① |
| 412 H | 13.5 | 7.9 | **12** | 10...14 | 29 | 4.7 | ■ | 1.6 | 8 100 | -20...+60 | 45 000 / 17 500 | 47 500 | ② |
| 414 | 10.0 | 5.9 | **24** | 20...28 | 18 | 3.8 | ■ | 1.0 | 6 000 | -20...+70 | 50 000 / 20 000 | 52 500 | ① |
| 414 H | 13.5 | 7.9 | **24** | 20...26.5 | 29 | 4.7 | ■ | 1.7 | 8 100 | -20...+60 | 45 000 / 17 500 | 47 500 | ② |
| Model with temperature range up to +85 °C. | | | | | | | | | | | | | |
| 412-099 | 10.0 | 5.9 | **12** | 10...14 | 18 | 3.8 | ■ | 0.8 | 6 000 | -20...+85 | 50 000 / 20 000 | 52 500 | ① |

Subject to change

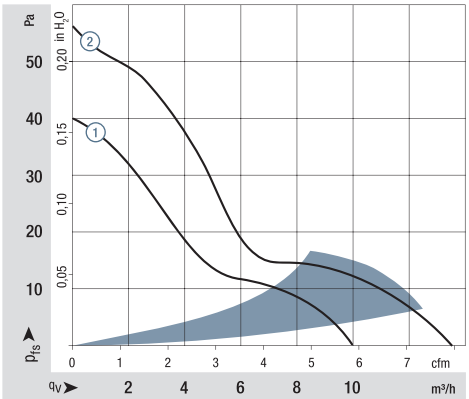


Air performance measured according to: ISO 5801.
Installation category A, without contact protection.
Noise: Total sound power level $L_{WA}$ ISO 10302 measured on a hemisphere with a radius of 2 m.
Sound pressure level $L_{pA}$ measured at 1 m distance from fan axis.
The values given are applicable only under the specified measuring conditions and may differ depending on the installation conditions.
In the event of deviation from the standard configuration, the parameters must be checked after installation!
For detailed information see
http://www.ebmpapst.com/general conditions

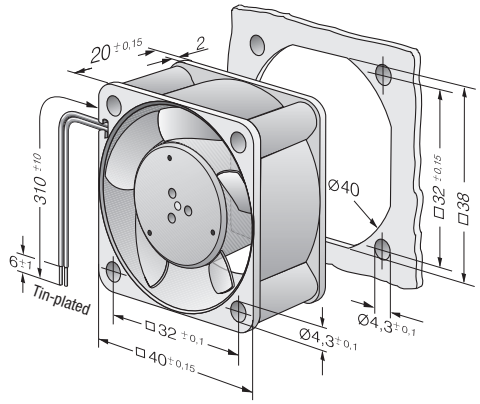

Max. 38 m³/h

# DC axial fans

☐ 40 x 28 mm



- **Material:** Housing: GRP[1] (PBT)
  Impeller: GRP[1] (PA)
- **Direction of air flow:** Exhaust over struts
- **Direction of rotation:** Counterclockwise, looking towards rotor
- **Connection:** Via single wires AWG 28, UL 1061
- **Weight:** 45 g

- **Possible special versions:**
  (See chapter DC fans - specials)
  - Speed signal
  - Go / NoGo alarm
  - Alarm with speed limit
  - External temperature sensor
  - PWM control input
  - Analog control input
  - Moisture protection
  - Salt spray protection
  - Degree of protection IP 54 / IP 68

1) Fiberglass-reinforced plastic

| Series 420 J<br>VWC0040JUDBS<br>**Nominal data** | Air flow | Air flow | **Nominal voltage** | Voltage range | Sound pressure level | Sound power level | Sintec sleeve bearings<br>Ball bearings | Power consumption | Nominal speed | Temperature range | Service life $L_{10}$ (40 °C)<br>ebm-papst standard<br>Service life $L_{10}$ ($T_{max}$)<br>ebm-papst standard | Life expectancy $L_{10IPC}$<br>(40 °C) see page 15 | Curve |
|---|---|---|---|---|---|---|---|---|---|---|---|---|---|
| **Type** | **m³/h** | **cfm** | **VDC** | **VDC** | **dB(A)** | **Bel(A)** | **□ / ■** | **Watts** | **rpm⁻¹** | **°C** | **Hours** | **Hours** | |
| 422 JM | 24 | 14,2 | **12** | 8...13,8 | 42 | 5,5 | ■ | 2,4 | 11 400 | -20...+70 | 75 000 / 37 500 | 127 500 | ① |
| 422 JN | 31 | 18,3 | **12** | 8...13,8 | 48 | 6,0 | ■ | 4,1 | 14 250 | -20...+70 | 67 500 / 35 000 | 115 000 | ② |
| 422 JH | 38 | 22,4 | **12** | 8...13,8 | 54 | 6,6 | ■ | 6,9 | 17 250 | -20...+70 | 60 000 / 30 000 | 102 500 | ③ |
| 424 JM | 24 | 14,2 | **24** | 16...28 | 42 | 5,5 | ■ | 2,7 | 11 400 | -20...+70 | 75 000 / 37 500 | 127 500 | ① |
| 424 JN | 31 | 18,3 | **24** | 16...28 | 48 | 6,0 | ■ | 4,3 | 14 250 | -20...+70 | 67 500 / 35 000 | 115 000 | ② |
| 424 JH | 38 | 22,4 | **24** | 16...26,4 | 54 | 6,6 | ■ | 6,9 | 17 250 | -20...+65 | 60 000 / 32 500 | 102 500 | ③ |
| Model with degree of protection IP 68, -40 °C, speed signal and EMC - Class B. | | | | | | | | | | | | | |
| 422 J/2 HPU | 37 | 21,8 | **12** | 8...13,8 | 56 | 6,6 | ■ | 7,5 | 17 250 | -40...+70 | 60 000 / 30 000 | 102 500 | ④ |
| 424 J/2 HPU | 37 | 21,8 | **24** | 18...28 | 56 | 6,6 | ■ | 7,0 | 17 250 | -40...+70 | 60 000 / 30 000 | 102 500 | ④ |
| 428 J/2 HPU | 37 | 21,8 | **48** | 36...60 | 56 | 6,6 | ■ | 7,0 | 17 250 | -40...+70 | 60 000 / 30 000 | 102 500 | ④ |

Subject to change

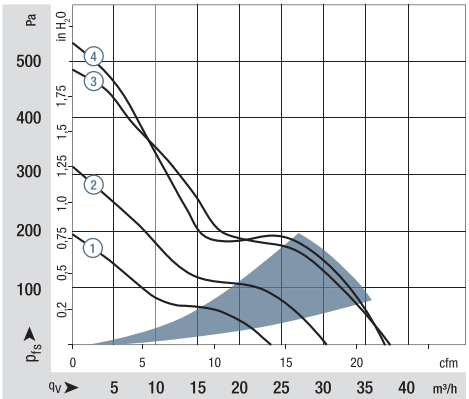


Air performance measured according to: ISO 5801.
Installation category A, without contact protection.
Noise: Total sound power level $L_{WA}$ ISO 10302 measured on a hemisphere with a radius of 2 m.
Sound pressure level $L_{pA}$ measured at 1 m distance from fan axis.
The values given are applicable only under the specified measuring conditions and may differ depending on the installation conditions.
In the event of deviation from the standard configuration, the parameters must be checked after installation!
For detailed information see
http://www.ebmpapst.com/general conditions

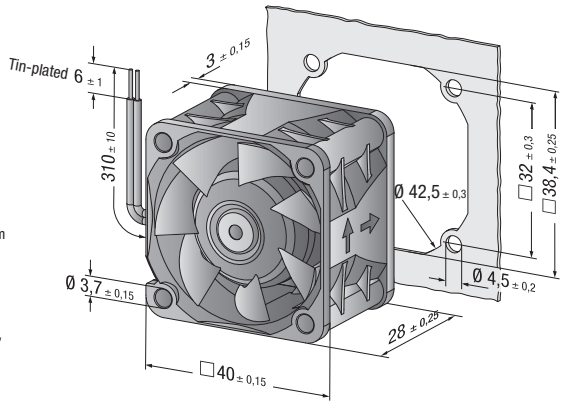




Finger guards
from p. 254

ebmpapst

Max. 20 m³/h

# DC axial fans

## ☐ 50 x 15 mm



- **Material:** Housing: GRP[1] (PBT)
  Impeller: GRP[1] (PA)
- **Direction of air flow:** Exhaust over struts
- **Direction of rotation:** Counterclockwise, looking towards rotor
- **Connection:** Via single wires AWG 28, TR 64
- **Highlights:** Some models are suitable for use at high ambient temperatures
- **Weight:** 27 g

- **Possible special versions:**
  (See chapter DC fans - specials)
  - Speed signal
  - Go / NoGo alarm
  - PWM control input
  - Moisture protection

1) Fiberglass-reinforced plastic

| Series 500 F<br>VWC0050FUDBS<br>**Nominal data** | Air flow | Air flow | **Nominal voltage** | Voltage range | Sound pressure level | Sound power level | Sintec sleeve bearings<br>Ball bearings | Power consumption | Nominal speed | Temperature range | Service life $L_{10}$ (20 °C) ebm-papst standard<br>Service life $L_{10}$ (60 °C) ebm-papst standard | Life expectancy $L_{10IPC}$ (40 °C) see page 15 | Curve |
|---|---|---|---|---|---|---|---|---|---|---|---|---|---|
| **Type** | **m³/h** | **cfm** | **VDC** | **VDC** | **dB(A)** | **Bel(A)** | **□ / ■** | **Watts** | **rpm⁻¹** | **°C** | **Hours** | **Hours** | |
| 512 F | 20 | 11.8 | **12** | 10.8...13.2 | 30 | 4.5 | ■ | 0.8 | 5 000 | -20...+70 | 50 000 / 20 000 | 52 500 | ② |
| 514 F | 20 | 11.8 | **24** | 21.6...26.4 | 30 | 4.5 | ■ | 0.9 | 5 000 | -20...+70 | 50 000 / 20 000 | 52 500 | ② |
| Model with temperature range up to +85 °C. | | | | | | | | | | | | | |
| 512 FL-547 | 11 | 6.5 | **12** | 10.2...13.8 | 18 | 3.7 | ■ | 0.4 | 3 000 | -20...+85 | 50 000 / 20 000 | 52 500 | ① |
| 512 F-532 | 20 | 11.8 | **12** | 10.8...13.2 | 30 | 4.5 | ■ | 0.9 | 5 000 | -20...+85 | 50 000 / 20 000 | 52 500 | ② |

Subject to change

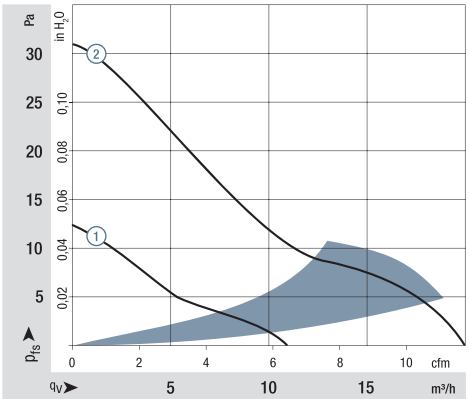


Air performance measured according to: ISO 5801.
Installation category A, without contact protection.
Noise: Total sound power level $L_{WA}$ ISO 10302 measured on a hemisphere with a radius of 2 m.
Sound pressure level $L_{pA}$ measured at 1 m distance from fan axis.
The values given are applicable only under the specified measuring conditions and may differ depending on the installation conditions.
In the event of deviation from the standard configuration, the parameters must be checked after installation!
For detailed information see
http://www.ebmpapst.com/general conditions

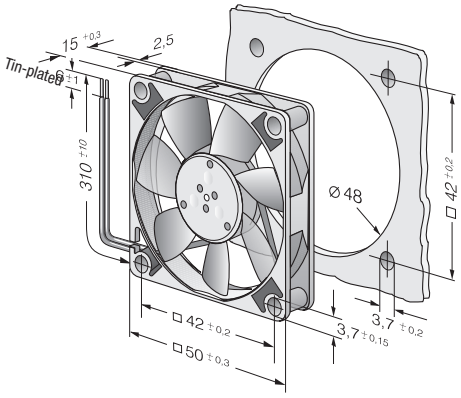

Max. 33 m³/h

# DC axial fans

## ☐ 60 x 15 mm



- **Material:** Housing: GRP[1] (PBT)
  Impeller: GRP[1] (PA)
- **Direction of air flow:** Exhaust over struts
- **Direction of rotation:** Counterclockwise, looking towards rotor
- **Connection:** Via single wires AWG 28, TR 64
- **Highlights:** Some models are suitable for use at high ambient temperatures
- **Weight:** 30 g

- **Possible special versions:**
  (See chapter DC fans - specials)
  - Speed signal
  - Go / NoGo alarm
  - PWM control input
  - Moisture protection

1) Fiberglass-reinforced plastic

| Series 600 F<br>VWC0060FUDBS<br>**Nominal data** | Air flow | Air flow | **Nominal voltage** | Voltage range | Sound pressure level | Sound power level | Sintec sleeve bearings<br>Ball bearings | Power consumption | Nominal speed | Temperature range | Service life $L_{10}$ (20 °C) ebm-papst standard<br>Service life $L_{10}$ (60 °C) ebm-papst standard | Life expectancy $L_{10IPC}$ (40 °C) see page 15 | Curve |
|---|---|---|---|---|---|---|---|---|---|---|---|---|---|
| **Type** | **m³/h** | **cfm** | **VDC** | **VDC** | **dB(A)** | **Bel(A)** | **□ / ■** | **Watts** | **rpm⁻¹** | **°C** | **Hours** | **Hours** | |
| 605 F | 29 | 17.1 | **5** | 4.5...5.2 | 27 | 4.4 | ■ | 1.1 | 4 000 | -20...+50 | 50 000 / 20 000 | 52 500 | ② |
| 612 FL | 19 | 11.2 | **12** | 11.5...13.2 | 16 | 3.6 | ■ | 0.4 | 2 650 | -20...+70 | 50 000 / 20 000 | 52 500 | ① |
| 612 F | 29 | 17.1 | **12** | 10.8...13.2 | 27 | 4.4 | ■ | 1.0 | 3 900 | -20...+70 | 50 000 / 20 000 | 52 500 | ② |
| 612 FH | 33 | 19.4 | **12** | 10.0...13.2 | 31 | 4.8 | ■ | 1.5 | 4 500 | -20...+60 | 45 000 / 17 500 | 47 500 | ③ |
| 614 F | 29 | 17.1 | **24** | 21.6...26.4 | 27 | 4.4 | ■ | 1.1 | 3 900 | -20...+70 | 50 000 / 20 000 | 52 500 | ② |
| 614 F/39 H-691 | 33 | 19.4 | **24** | 16...28 | 31 | 4.8 | ■ | 1.4 | 4 500 | -20...+60 | 45 000 / 17 500 | 47 500 | ③ |
| Model with temperature range up to +80 / 85 °C. | | | | | | | | | | | | | |
| 612 FL-680 | 19 | 11.2 | **12** | 11.5...14 | 16 | 3.6 | ■ | 0.5 | 2 650 | -20...+85 | 50 000 / 20 000 | 52 500 | ① |
| 612 F-637 | 29 | 17.1 | **12** | 10.8...12.6 | 27 | 4.4 | ■ | 1.0 | 3 900 | -20...+80 | 50 000 / 20 000 | 52 500 | ② |

Subject to change

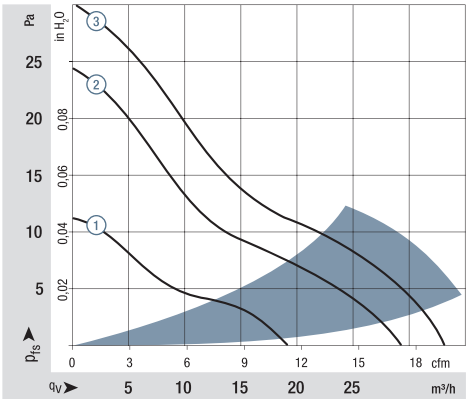


Air performance measured according to: ISO 5801.
Installation category A, without contact protection.
Noise: Total sound power level $L_{WA}$ ISO 10302 measured on a hemisphere with a radius of 2 m.
Sound pressure level $L_{pA}$ measured at 1 m distance from fan axis.
The values given are applicable only under the specified measuring conditions and may differ depending on the installation conditions.
In the event of deviation from the standard configuration, the parameters must be checked after installation!
For detailed information see
http://www.ebmpapst.com/general conditions

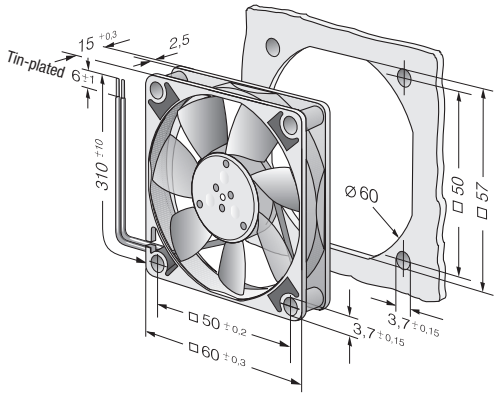




ebmpapst

Max. 67 m³/h

# DC axial fans

## ☐ 60 x 25 mm



- **Material:** Housing: GRP[1] (PBT)
  Impeller: GRP[1] (PA)
- **Direction of air flow:** Exhaust over struts
- **Direction of rotation:** Clockwise, looking towards rotor
- **Connection:** Via single wires AWG 22, TR 64
- **Highlights:** Very low-noise motor
- **Weight:** 70 g

- **Possible special versions:**
  (See chapter DC fans - specials)
  - Speed signal
  - Go / NoGo alarm
  - Alarm with speed limit
  - External temperature sensor
  - Internal temperature sensor
  - PWM control input
  - Analog control input
  - Moisture protection

1) Fiberglass-reinforced plastic

Series 620
VWC0060AUEBS

| Nominal data | Air flow | Air flow | Nominal voltage | Voltage range | Sound pressure level | Sound power level | Sintec sleeve bearings / Ball bearings | Power consumption | Nominal speed | Temperature range | Service life $L_{10}$ (40 °C) ebm-papst standard / Service life $L_{10}$ ($T_{max}$) ebm-papst standard | Life expectancy $L_{10IPC}$ (40 °C) see page 15 | Curve |
|---|---|---|---|---|---|---|---|---|---|---|---|---|---|
| **Type** | **m³/h** | **cfm** | **VDC** | **VDC** | **dB(A)** | **Bel(A)** | **□ / ■** | **Watts** | **rpm⁻¹** | **°C** | **Hours** | **Hours** | |
| 622 L | 21 | 12.4 | **12** | 8...15 | 20 | 3.7 | ■ | 0.5 | 3 200 | -20...+85 | 80 000 / 20 000 | 135 000 | ① |
| 622 M | 30 | 17.7 | **12** | 8...15 | 29 | 4.3 | ■ | 1.0 | 4 550 | -20...+75 | 77 500 / 30 000 | 130 000 | ② |
| 622 N | 40 | 23.5 | **12** | 8...15 | 35 | 4.7 | ■ | 1.9 | 6 100 | -20...+70 | 72 500 / 35 000 | 122 500 | ③ |
| 622 H | 46 | 27.1 | **12** | 8...15 | 39 | 5.1 | ■ | 2.3 | 6 850 | -20...+70 | 70 000 / 35 000 | 117 500 | ④ |
| 622 HH | 56 | 33.0 | **12** | 8...15 | 43 | 5.6 | ■ | 3.5 | 8 200 | -20...+70 | 65 000 / 32 500 | 110 000 | ⑤ |
| 622/2 H3P | 67 | 39.4 | **12** | 8...15 | 48 | 5.9 | ■ | 5.5 | 9 700 | -20...+70 | 52 500 / 32 500 | 87 500 | ⑥ |
| 624 L | 21 | 12.4 | **24** | 18...28 | 20 | 3.7 | ■ | 1.0 | 3 200 | -20...+70 | 80 000 / 40 000 | 135 000 | ① |
| 624 M | 30 | 17.7 | **24** | 12...28 | 29 | 4.3 | ■ | 1.5 | 4 550 | -20...+70 | 77 500 / 37 500 | 130 000 | ② |
| 624 N | 40 | 23.5 | **24** | 12...28 | 35 | 4.7 | ■ | 2.2 | 6 100 | -20...+70 | 72 500 / 35 000 | 122 500 | ③ |
| 624 H | 46 | 27.1 | **24** | 18...28 | 39 | 5.1 | ■ | 2.4 | 6 850 | -20...+70 | 70 000 / 35 000 | 117 500 | ④ |
| 624 HH | 56 | 33.0 | **24** | 18...28 | 43 | 5.6 | ■ | 3.6 | 8 200 | -20...+70 | 65 000 / 32 500 | 110 000 | ⑤ |
| 624/2 H3P | 67 | 39.4 | **24** | 18...28 | 48 | 5.9 | ■ | 5.6 | 9 700 | -20...+60 | 52 500 / 32 500 | 87 500 | ⑥ |
| 628 HH | 56 | 33.0 | **48** | 36...60 | 43 | 5.6 | ■ | 4.2 | 8 200 | -20...+70 | 65 000 / 32 500 | 110 000 | ⑤ |

Subject to change

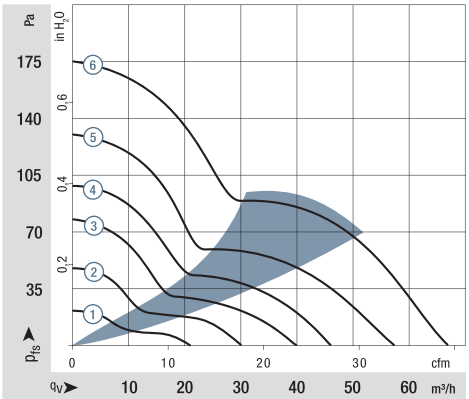


Air performance measured according to: ISO 5801.
Installation category A, without contact protection.
Noise: Total sound power level $L_{WA}$ ISO 10302 measured on a hemisphere with a radius of 2 m.
Sound pressure level $L_{pA}$ measured at 1 m distance from fan axis.
The values given are applicable only under the specified measuring conditions and may differ depending on the installation conditions.
In the event of deviation from the standard configuration, the parameters must be checked after installation!
For detailed information see
http://www.ebmpapst.com/general conditions

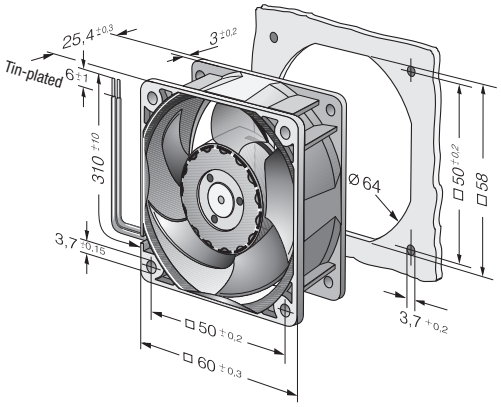

Max. 58 m³/h

# DC axial fans

## ☐ 60 x 25 mm



- **Material:** Housing: GRP[1] (PBT)
  Impeller: GRP[1] (PA)
- **Direction of air flow:** Exhaust over struts
- **Direction of rotation:** Clockwise, looking towards rotor
- **Connection:** Via single wires AWG 22, TR 64
- **Highlights:** Developed for applications with demanding environmental requirements
- **Weight:** 70 g

- **Possible special versions:**
  (See chapter DC fans - specials)
  - Speed signal
  - Go / NoGo alarm
  - Alarm with speed limit
  - External temperature sensor
  - PWM control input
  - Analog control input
  - Moisture protection
  - Salt spray protection
  - Degree of protection: IP 54 / IP 68

1) Fiberglass-reinforced plastic

| Series 630<br>VWC0060AUEBS<br>**Nominal data** | Air flow | Air flow | **Nominal voltage** | Voltage range | Sound pressure level | Sound power level | Sintec sleeve bearings<br>Ball bearings | Power consumption | Nominal speed | Temperature range | Service life $L_{10}$ (40 °C)<br>ebm-papst standard<br>Service life $L_{10}$ ($T_{max}$)<br>ebm-papst standard | Life expectancy $L_{10IPC}$<br>(40 °C) see page 15 | Curve |
|---|---|---|---|---|---|---|---|---|---|---|---|---|---|
| **Type** | **m³/h** | **cfm** | **VDC** | **VDC** | **dB(A)** | **Bel(A)** | **□/■** | **Watts** | **rpm⁻¹** | **°C** | **Hours** | **Hours** | |
| 632 NU | 40 | 23.5 | **12** | 6...15 | 33 | 5.2 | ■ | 1.8 | 5 900 | -20...+70 | 85 000 / 42 500 | 142 500 | ① |
| 632/2 HPU | 44 | 25.9 | **12** | 10.8...13.2 | 35 | 5.4 | ■ | 1.5 | 6 300 | -20...+70 | 85 000 / 42 500 | 142 500 | ② |
| 634 NU | 40 | 23.5 | **24** | 12...30 | 34 | 5.1 | ■ | 1.6 | 5 900 | -20...+70 | 85 000 / 42 500 | 142 500 | ① |
| 634 HHU | 58 | 34.1 | **24** | 18...28 | 44 | 6.1 | ■ | 3.2 | 8 500 | -20...+70 | 75 000 / 37 500 | 127 500 | ③ |
| 634/2 HHPU | 58 | 34.1 | **24** | 18...28 | 44 | 6.1 | ■ | 3.2 | 8 500 | -40...+70 | 75 000 / 37 500 | 127 500 | ③ |
| 638/2 HPU | 44 | 25.9 | **48** | 40...60 | 35 | 5.4 | ■ | 1.8 | 6 300 | -20...+70 | 85 000 / 42 500 | 142 500 | ② |
| 638/2 HHPU | 58 | 34.1 | **48** | 40...60 | 44 | 6.1 | ■ | 3.2 | 8 500 | -40...+70 | 75 000 / 37 500 | 127 500 | ③ |

Subject to change

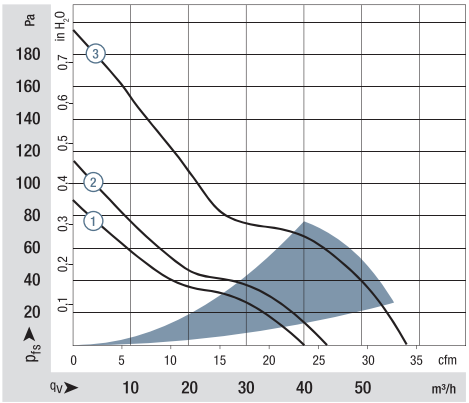


Air performance measured according to: ISO 5801.
Installation category A, without contact protection.
Noise: Total sound power level $L_{WA}$ ISO 10302 measured on a hemisphere with a radius of 2 m.
Sound pressure level $L_{pA}$ measured at 1 m distance from fan axis.
The values given are applicable only under the specified measuring conditions and may differ depending on the installation conditions.
In the event of deviation from the standard configuration, the parameters must be checked after installation!
For detailed information see
http://www.ebmpapst.com/general conditions

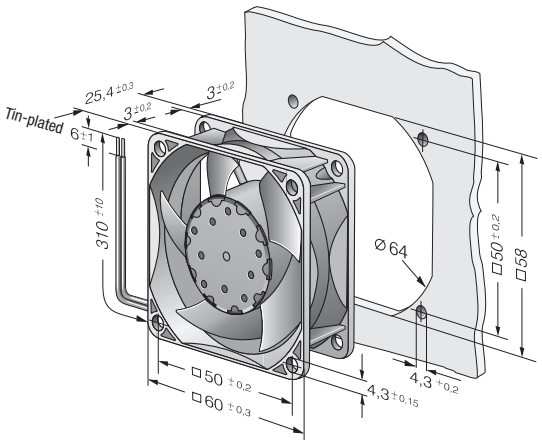




ebmpapst

Max. 56 m³/h

# DC axial fans

☐ 60 x 25 mm



- **Material:** Housing: GRP[1)] (PBT)
  Impeller: GRP[1)] (PA)
- **Direction of air flow:** Exhaust over struts
- **Direction of rotation:** Clockwise, looking towards rotor
- **Connection:** Via single wires AWG 22, TR 64
- **Highlights:** Some models are suitable for use at high ambient temperatures up to 85 °C.
- **Weight:** 66 g

- **Possible special versions:**
  (See chapter DC fans - specials)
  - Speed signal
  - Go / NoGo alarm
  - Moisture protection
  - Degree of protection: IP 54 / IP 68

1) Fiberglass-reinforced plastic

| Series 600 N<br>VWC0060YUEBS<br>**Nominal data** | Air flow | Air flow | **Nominal voltage** | Voltage range | Sound pressure level | Sound power level | Sintec sleeve bearings<br>Ball bearings | Power consumption | Nominal speed | Temperature range | Service life $L_{10}$ (40 °C) ebm-papst standard<br>Service life $L_{10}$ ($T_{max}$) ebm-papst standard | Life expectancy $L_{10IPC}$ (40 °C) see page 15 | Curve |
|---|---|---|---|---|---|---|---|---|---|---|---|---|---|
| **Type** | **m³/h** | **cfm** | **VDC** | **VDC** | **dB(A)** | **Bel(A)** | **□ / ■** | **Watts** | **rpm⁻¹** | **°C** | **Hours** | **Hours** | |
| 612 NGLE | 21 | 12.4 | **12** | 8...15 | 16 | 3.6 | □ | 0.6 | 2 500 | -20...+85 | 80 000 / 27 500 | 135 000 | ① |
| 612 NLE | 21 | 12.4 | **12** | 8...15 | 16 | 3.6 | ■ | 0.4 | 2 500 | -20...+85 | 80 000 / 27 500 | 135 000 | ① |
| 612 NGMLE | 25 | 14.7 | **12** | 8...15 | 19 | 3.9 | □ | 0.7 | 3 000 | -20...+80 | 80 000 / 32 500 | 135 000 | ② |
| 612 NMLE | 25 | 14.7 | **12** | 8...15 | 19 | 3.9 | ■ | 0.4 | 3 000 | -20...+85 | 80 000 / 27 500 | 135 000 | ② |
| 612 NGME | 35 | 20.6 | **12** | 8...15 | 28 | 4.6 | □ | 1.2 | 4 100 | -20...+75 | 80 000 / 35 000 | 135 000 | ③ |
| 612 NME | 35 | 20.6 | **12** | 8...15 | 28 | 4.6 | ■ | 0.8 | 4 100 | -20...+75 | 80 000 / 35 000 | 135 000 | ③ |
| 612 NN | 40 | 23.5 | **12** | 8...15 | 35 | 5.0 | ■ | 1.5 | 5 100 | -20...+70 | 70 000 / 35 000 | 117 500 | ④ |
| 612 NH | 43 | 25.3 | **12** | 8...15 | 37 | 5.3 | ■ | 1.8 | 5 600 | -20...+70 | 70 000 / 35 000 | 117 500 | ⑤ |
| 612 NHH-118 | 56 | 33.0 | **12** | 8...15 | 41 | 5.7 | ■ | 2.9 | 6 800 | -20...+70 | 60 000 / 30 000 | 102 500 | ⑥ |
| 614 NGL | 21 | 12.4 | **24** | 18...28 | 16 | 3.6 | □ | 1.0 | 2 500 | -20...+70 | 80 000 / 40 000 | 135 000 | ① |
| 614 NL | 21 | 12.4 | **24** | 18...28 | 16 | 3.6 | ■ | 0.8 | 2 500 | -20...+70 | 80 000 / 40 000 | 135 000 | ① |
| 614 NGML | 25 | 14.7 | **24** | 18...28 | 19 | 3.9 | □ | 1.2 | 3 000 | -20...+70 | 80 000 / 40 000 | 135 000 | ② |
| 614 NML | 25 | 14.7 | **24** | 18...28 | 19 | 3.9 | ■ | 1.0 | 3 000 | -20...+70 | 80 000 / 40 000 | 135 000 | ② |
| 614 NGM | 35 | 20.6 | **24** | 18...28 | 28 | 4.6 | □ | 1.7 | 4 100 | -20...+70 | 80 000 / 40 000 | 135 000 | ③ |
| 614 NM | 35 | 20.6 | **24** | 18...28 | 28 | 4.6 | ■ | 1.3 | 4 100 | -20...+70 | 80 000 / 40 000 | 135 000 | ③ |
| 614 NN | 40 | 23.5 | **24** | 18...28 | 35 | 5.0 | ■ | 1.8 | 5 100 | -20...+70 | 70 000 / 35 000 | 117 500 | ④ |
| 614 NH | 43 | 25.3 | **24** | 18...26 | 37 | 5.3 | ■ | 2.1 | 5 600 | -20...+70 | 70 000 / 35 000 | 117 500 | ⑤ |
| 614 NHH | 56 | 33.0 | **24** | 18...26 | 41 | 5.7 | ■ | 2.9 | 6 850 | -20...+70 | 60 000 / 30 000 | 102 500 | ⑥ |
| 614 NHH-119 | 56 | 33.0 | **24** | 18...28 | 41 | 5.7 | ■ | 2.9 | 6 850 | -20...+70 | 60 000 / 30 000 | 102 500 | ⑥ |
| 618 NM | 35 | 20.6 | **48** | 36...56 | 28 | 4.6 | ■ | 1.9 | 4 100 | -20...+70 | 80 000 / 40 000 | 135 000 | ③ |
| 618 NN | 40 | 23.5 | **48** | 36...56 | 35 | 5.0 | ■ | 2.1 | 5 100 | -20...+65 | 70 000 / 40 000 | 117 500 | ④ |

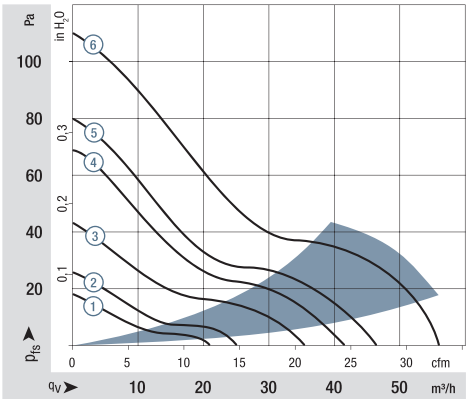


Air performance measured according to: ISO 5801.
Installation category A, without contact protection.
Noise: Total sound power level $L_{WA}$ ISO 10302 measured on a hemisphere with a radius of 2 m.
Sound pressure level $L_{pA}$ measured at 1 m distance from fan axis.
The values given are applicable only under the specified measuring conditions and may differ depending on the installation conditions.
In the event of deviation from the standard configuration, the parameters must be checked after installation!
For detailed information see
http://www.ebmpapst.com/general conditions

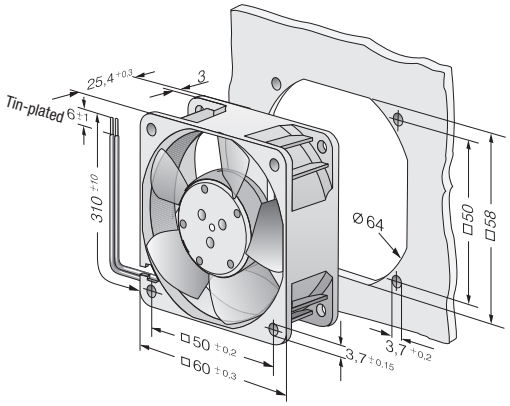

Max. 82 m³/h

# DC axial fans

## ☐ 60 x 32 mm



- **Material:** Housing: GRP[1] (PBT)
  Impeller: GRP[1] (PA)
- **Direction of air flow:** Exhaust over struts
- **Direction of rotation:** Clockwise, looking towards rotor
- **Connection:** Via single wires AWG 24, TR 64
- **Weight:** 100 g

- **Possible special versions:**
  (See chapter DC fans - specials)
  - Speed signal
  - Go / NoGo alarm
  - Alarm with speed limit
  - External temperature sensor
  - PWM control input
  - Analog control input
  - Moisture protection

1) Fiberglass-reinforced plastic

| Series 600 J<br>VWC0060JUECS<br>**Nominal data** | Air flow | Air flow | **Nominal voltage** | Voltage range | Sound pressure level | Sound power level | Sintec sleeve bearings<br>Ball bearings | Power consumption | Nominal speed | Temperature range | Service life $L_{10}$ (40 °C)<br>ebm-papst standard<br>Service life $L_{10}$ ($T_{max}$)<br>ebm-papst standard | Life expectancy $L_{10IPC}$<br>(40 °C) see page 15 | Curve |
|---|---|---|---|---|---|---|---|---|---|---|---|---|---|
| **Type** | **m³/h** | **cfm** | **VDC** | **VDC** | **dB(A)** | **Bel(A)** | **□ / ■** | **Watts** | **rpm⁻¹** | **°C** | **Hours** | **Hours** | |
| 612 JH | 70 | 41.2 | **12** | 7...13.6 | 53 | 6.4 | ■ | 7.7 | 11 700 | -20...+70 | 57 500 / 27 500 | 97 500 | ① |
| 614 JH | 70 | 41.2 | **24** | 14...26.4 | 53 | 6.4 | ■ | 7.7 | 11 700 | -20...+70 | 57 500 / 27 500 | 97 500 | ① |
| 618 JH | 70 | 41.2 | **48** | 36...56 | 53 | 6.4 | ■ | 7.7 | 11 700 | -20...+70 | 57 500 / 27 500 | 97 500 | ① |
| Fan types with streamer and integrated guard grille. | | | | | | | | | | | | | |
| 614 J/2 HHP | 82 | 48.3 | **24** | 18...30 | 62 | 7.6 | ■ | 14.6 | 15 000 | -20...+75 | 65 000 / 25 000 | 110 000 | ② |
| 618 J/2 HHP | 82 | 48.3 | **48** | 38...58 | 62 | 7.6 | ■ | 14.6 | 15 000 | -20...+75 | 65 000 / 25 000 | 110 000 | ② |

Subject to change

Rear view of types 614 J/2 HHP and 618 J/2 HHP

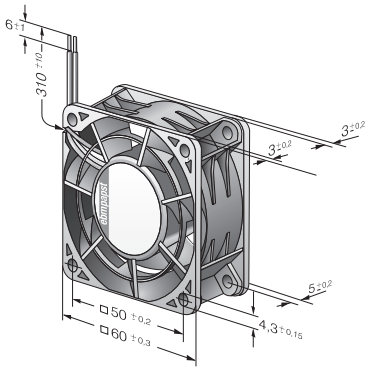


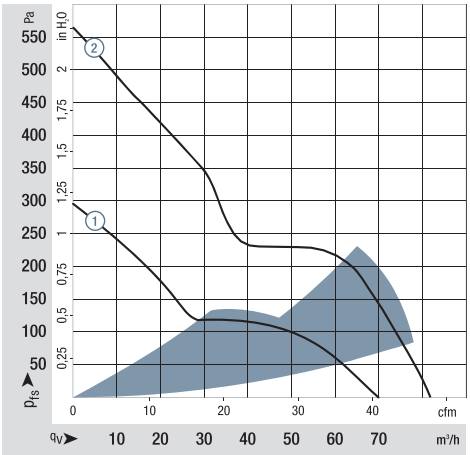


Air performance measured according to: ISO 5801.
Installation category A, without contact protection.
Noise: Total sound power level $L_{WA}$ ISO 10302 measured on a hemisphere with a radius of 2 m.
Sound pressure level $L_{pA}$ measured at 1 m distance from fan axis.
The values given are applicable only under the specified measuring conditions and may differ depending on the installation conditions.
In the event of deviation from the standard configuration, the parameters must be checked after installation!
For detailed information see
http://www.ebmpapst.com/general conditions

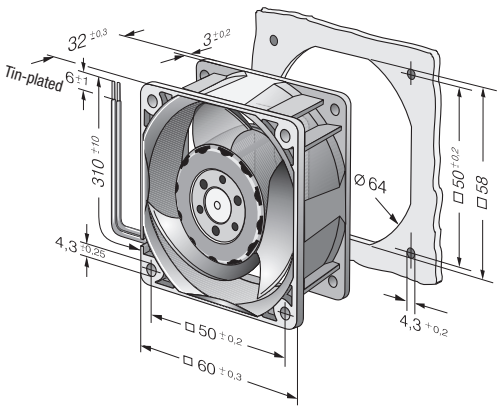




ebmpapst

Max. 44 m³/h

# DC axial fans

## □ 70 x 15 mm



- **Material:** Housing: GRP[1] (PBT)
  Impeller: GRP[1] (PA)
- **Direction of air flow:** Exhaust over struts
- **Direction of rotation:** Counterclockwise, looking towards rotor
- **Connection:** Via single wires AWG 24 to AWG 28, TR 64
- **Weight:** 53 g

- **Possible special versions:**
  (See chapter DC fans - specials)
  - Speed signal
  - Go / NoGo alarm
  - Moisture protection

1) Fiberglass-reinforced plastic

| Series 700 F<br>VWC0070FUEAS<br>**Nominal data** | Air flow | Air flow | **Nominal voltage** | Voltage range | Sound pressure level | Sound power level | Sintec sleeve bearings<br>Ball bearings | Power consumption | Nominal speed | Temperature range | Service life $L_{10}$ (40 °C) ebm-papst standard<br>Service life $L_{10}$ ($T_{max}$) ebm-papst standard | Life expectancy $L_{10IPC}$ (40 °C) see page 15 | Curve |
|---|---|---|---|---|---|---|---|---|---|---|---|---|---|
| **Type** | **m³/h** | **cfm** | **VDC** | **VDC** | **dB(A)** | **Bel(A)** | □ / ■ | **Watts** | **rpm⁻¹** | **°C** | **Hours** | **Hours** | |
| 712 F/2L-005* | 28 | 16.5 | **12** | 8...13.8 | 25 | 4.7 | ■ | 0.6 | 3 300 | -20...+70 | 60 000 / 30 000 | 102 500 | ① |
| 712 F/2M-006* | 36 | 21.2 | **12** | 8...13.8 | 32 | 5.0 | ■ | 1.1 | 4 300 | -20...+70 | 60 000 / 30 000 | 102 500 | ② |
| 712 F | 44 | 25.9 | **12** | 8...13.8 | 38 | 5.3 | ■ | 1.7 | 5 300 | -20...+70 | 60 000 / 30 000 | 102 500 | ③ |
| 714 F | 44 | 25.9 | **24** | 18...28 | 38 | 5.3 | ■ | 1.5 | 5 300 | -20...+70 | 60 000 / 30 000 | 102 500 | ③ |

Subject to change

*Version with 3-pin

| | |
|---|---|
| Molex plug housing | 22-01-2035 |
| Molex Contacts | 08-50-0113 |

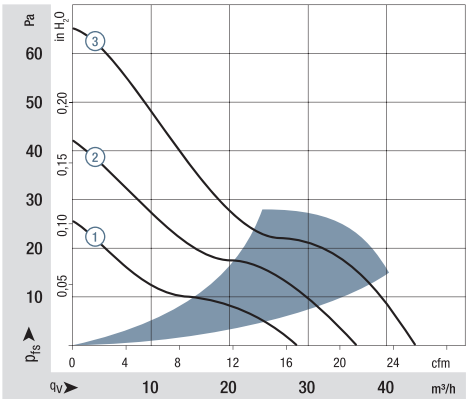


Air performance measured according to: ISO 5801.
Installation category A, without contact protection.
Noise: Total sound power level $L_{WA}$ ISO 10302 measured on a hemisphere with a radius of 2 m.
Sound pressure level $L_{pA}$ measured at 1 m distance from fan axis.
The values given are applicable only under the specified measuring conditions and may differ depending on the installation conditions.
In the event of deviation from the standard configuration, the parameters must be checked after installation!
For detailed information see
http://www.ebmpapst.com/general conditions

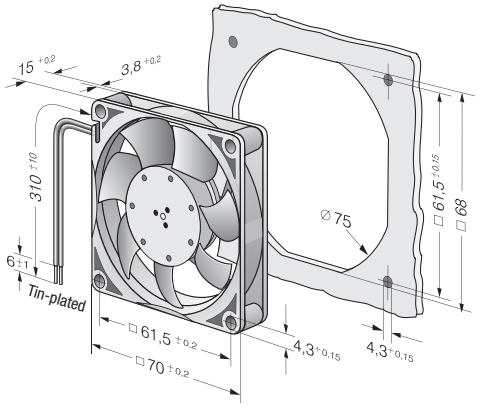

Max. 117 m³/h

# DC axial fans

## ☐ 80 x 25 mm



- **Material:** Housing: GRP[1] (PBT)
  Impeller: GRP[1] (PA)
- **Direction of air flow:** Exhaust over struts
- **Direction of rotation:** Counterclockwise, looking towards rotor
- **Connection:** Via single wires AWG 24, TR 64
- **Highlights:** Very low-noise motor
- **Weight:** 105 g

- **Possible special versions:**
  (See chapter DC fans - specials)
  - Speed signal
  - Go / NoGo alarm
  - Alarm with speed limit
  - External temperature sensor
  - Internal temperature sensor
  - PWM control input
  - Analog control input
  - Moisture protection

1) Fiberglass-reinforced plastic

| Series 8450<br>VWC0080AUEBS<br>**Nominal data** | Air flow | Air flow | **Nominal voltage** | Voltage range | Sound pressure level | Sound power level | Sintec sleeve bearings<br>Ball bearings | Power consumption | Nominal speed | Temperature range | Service life $L_{10}$ (40 °C) ebm-papst standard<br>Service life $L_{10}$ ($T_{max}$) ebm-papst standard | Life expectancy $L_{10IPC}$ (40 °C) see page 15 | Curve |
|---|---|---|---|---|---|---|---|---|---|---|---|---|---|
| **Type** | **m³/h** | **cfm** | **VDC** | **VDC** | **dB(A)** | **Bel(A)** | **□ / ■** | **Watts** | **rpm⁻¹** | **°C** | **Hours** | **Hours** | |
| 8452/2 L | 32 | 18.8 | **12** | 8...15 | 14 | 3.3 | ■ | 0.4 | 1 700 | -20...75 | 80 000 / 35 000 | 135 000 | ① |
| 8452 M | 58 | 34.1 | **12** | 8...15 | 32 | 4.7 | ■ | 1.3 | 3 100 | -20...75 | 80 000 / 35 000 | 135 000 | ② |
| 8452/2 N | 68 | 40.0 | **12** | 8...15 | 36 | 5.0 | ■ | 1.8 | 3 600 | -20...70 | 70 000 / 35 000 | 117 500 | ③ |
| Models with 25 kHz PWM control and speed signal to 4-wire specification. | | | | | | | | | | | | | |
| 8452/2 HP | 75 | 44.1 | **12** | 10.8...13.2 | 38 | 5.3 | ■ | 2.5 | 4 000 | -20...70 | 70 000 / 35 000 | 117 500 | ④ |
| 8452/2 HHP | 83 | 48.8 | **12** | 10.8...13.2 | 42 | 5.5 | ■ | 3.5 | 4 400 | -20...60 | 65 000 / 40 000 | 110 000 | ⑤ |
| Models with 1-30 kHz PWM control and speed signal. | | | | | | | | | | | | | |
| 8452/2 H4P | 117 | 68.8 | **12** | 8...15 | 50 | 6.4 | ■ | 6.8 | 6 200 | -20...70 | 60 000 / 30 000 | 102 500 | ⑥ |
| 8454/2 H4P | 117 | 68.8 | **24** | 20.0...26.4 | 50 | 6.4 | ■ | 6.8 | 6 200 | -20...70 | 60 000 / 30 000 | 102 500 | ⑥ |

Subject to change

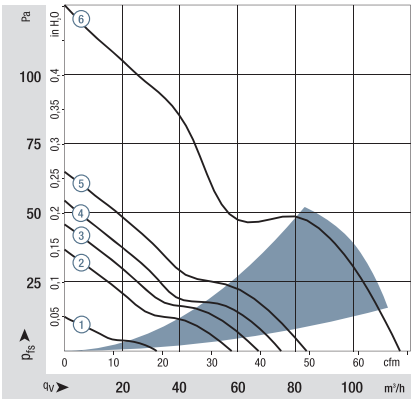


Air performance measured according to: ISO 5801.
Installation category A, without contact protection.
Noise: Total sound power level $L_{WA}$ ISO 10302 measured on a hemisphere with a radius of 2 m.
Sound pressure level $L_{pA}$ measured at 1 m distance from fan axis.
The values given are applicable only under the specified measuring conditions and may differ depending on the installation conditions.
In the event of deviation from the standard configuration, the parameters must be checked after installation!
For detailed information see
http://www.ebmpapst.com/general conditions

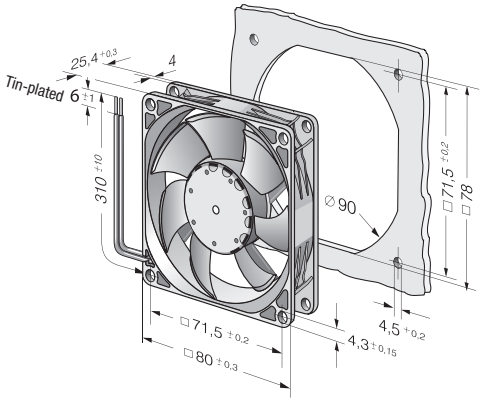




ebmpapst

Max. 79 m³/h

# DC axial fans

☐ 80 x 25 mm



- **Material:** Housing: GRP[1] (PBT)
  Impeller: GRP[1] (PA)
- **Direction of air flow:** Exhaust over struts
- **Direction of rotation:** Counterclockwise, looking towards rotor
- **Connection:** Via single wires AWG 24, TR 64
- **Highlights:** Some models are suitable for use at high ambient temperatures up to 85 °C.
- **Weight:** 95 g

- **Possible special versions:**
  (See chapter DC fans - specials)
  - Speed signal
  - Go / NoGo alarm
  - Alarm with speed limit
  - External temperature sensor
  - Internal temperature sensor
  - PWM control input
  - Analog control input
  - Moisture protection
  - Degree of protection: IP 54 / IP 68

1) Fiberglass-reinforced plastic

| Series 8400 N<br>VWC0080YUEBS<br>**Nominal data** | Air flow | Air flow | **Nominal voltage** | Voltage range | Sound pressure level | Sound power level | Sintec sleeve bearings<br>Ball bearings | Power consumption | Nominal speed | Temperature range | Service life $L_{10}$ (40 °C)<br>ebm-papst standard | Service life $L_{10}$ ($T_{max}$)<br>ebm-papst standard | Life expectancy $L_{10IPC}$<br>(40 °C) see page 15 | Curve |
|---|---|---|---|---|---|---|---|---|---|---|---|---|---|---|
| **Type** | **m³/h** | **cfm** | **VDC** | **VDC** | **dB(A)** | **Bel(A)** | □ / ■ | **Watts** | **rpm⁻¹** | **°C** | **Hours** | | **Hours** | |
| 8412 NGLE | 33 | 19.4 | **12** | 8...15 | 12 | 3.5 | □ | 0.5 | 1 500 | -20...+85 | 80 000 / 27 500 | | 135 000 | ① |
| 8412 NLE | 33 | 19.4 | **12** | 8...15 | 17 | 3.7 | ■ | 0.3 | 1 500 | -20...+85 | 80 000 / 27 500 | | 135 000 | ① |
| 8412 NGMLE | 45 | 26.5 | **12** | 8...15 | 19 | 3.9 | □ | 0.9 | 2 050 | -20...+80 | 80 000 / 32 500 | | 135 000 | ② |
| 8412 NMLE | 45 | 26.5 | **12** | 8...15 | 21 | 4.0 | ■ | 0.6 | 2 050 | -20...+85 | 80 000 / 27 500 | | 135 000 | ② |
| 8412 NGME | 58 | 34.1 | **12** | 8...15 | 26 | 4.3 | □ | 1.4 | 2 600 | -20...+75 | 80 000 / 35 000 | | 135 000 | ③ |
| 8412 NME | 58 | 34.1 | **12** | 8...15 | 27 | 4.4 | ■ | 1.0 | 2 600 | -20...+75 | 80 000 / 35 000 | | 135 000 | ③ |
| 8412 NG | 69 | 40.6 | **12** | 8...15 | 32 | 4.7 | □ | 2.0 | 3 100 | -20...+70 | 70 000 / 35 000 | | 117 500 | ④ |
| 8412 N | 69 | 40.6 | **12** | 8...15 | 32 | 4.7 | ■ | 1.7 | 3 100 | -20...+70 | 70 000 / 35 000 | | 117 500 | ④ |
| 8412 NH | 79 | 46.5 | **12** | 8...13.2 | 37 | 5.0 | ■ | 2.1 | 3 600 | -20...+70 | 70 000 / 35 000 | | 117 500 | ⑤ |
| 8412 NH-217 | 79 | 46.5 | **12** | 8...15 | 37 | 5.0 | ■ | 2.5 | 3 600 | -20...+70 | 70 000 / 35 000 | | 117 500 | ⑤ |
| 8414 NGL | 33 | 19.4 | **24** | 18...28 | 12 | 3.5 | □ | 0.9 | 1 500 | -20...+70 | 80 000 / 40 000 | | 135 000 | ① |
| 8414 NL | 33 | 19.4 | **24** | 18...28 | 17 | 3.7 | ■ | 0.8 | 1 500 | -20...+70 | 80 000 / 40 000 | | 135 000 | ① |
| 8414 NGML | 45 | 26.5 | **24** | 18...28 | 19 | 3.9 | □ | 1.2 | 2 050 | -20...+70 | 80 000 / 40 000 | | 135 000 | ② |
| 8414 NML | 45 | 26.5 | **24** | 18...28 | 21 | 4.0 | ■ | 1.1 | 2 050 | -20...+70 | 80 000 / 40 000 | | 135 000 | ② |
| 8414 NGM | 58 | 34.1 | **24** | 18...28 | 26 | 4.3 | □ | 1.4 | 2 600 | -20...+70 | 80 000 / 40 000 | | 135 000 | ③ |
| 8414 NM | 58 | 34.1 | **24** | 18...28 | 27 | 4.4 | ■ | 1.4 | 2 600 | -20...+70 | 80 000 / 40 000 | | 135 000 | ③ |
| 8414 NG | 69 | 40.6 | **24** | 18...28 | 32 | 4.7 | □ | 2.2 | 3 100 | -20...+70 | 70 000 / 35 000 | | 117 500 | ④ |
| 8414 N | 69 | 40.6 | **24** | 18...28 | 32 | 4.7 | ■ | 1.8 | 3 100 | -20...+70 | 70 000 / 35 000 | | 117 500 | ④ |
| 8414 NH | 79 | 46.5 | **24** | 18...26 | 37 | 5.0 | ■ | 2.4 | 3 600 | -20...+70 | 70 000 / 35 000 | | 117 500 | ⑤ |
| 8414 NH-221 | 79 | 46.5 | **24** | 18...28 | 37 | 5.0 | ■ | 2.2 | 3 600 | -20...+70 | 70 000 / 35 000 | | 117 500 | ⑤ |
| 8418 N | 69 | 40.6 | **48** | 36...56 | 32 | 4.7 | ■ | 2.0 | 3 100 | -20...+70 | 70 000 / 35 000 | | 117 500 | ④ |

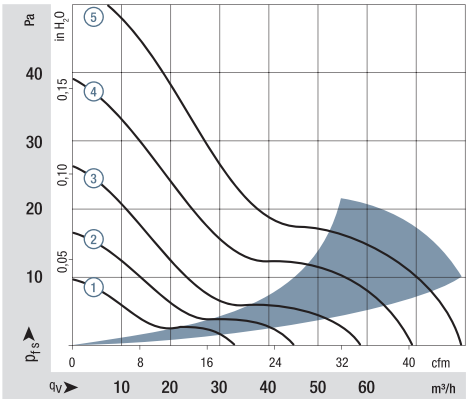


Air performance measured according to: ISO 5801.
Installation category A, without contact protection.
Noise: Total sound power level $L_{WA}$ ISO 10302 measured on a hemisphere with a radius of 2 m.
Sound pressure level $L_{pA}$ measured at 1 m distance from fan axis.
The values given are applicable only under the specified measuring conditions and may differ depending on the installation conditions.
In the event of deviation from the standard configuration, the parameters must be checked after installation!
For detailed information see
http://www.ebmpapst.com/general conditions

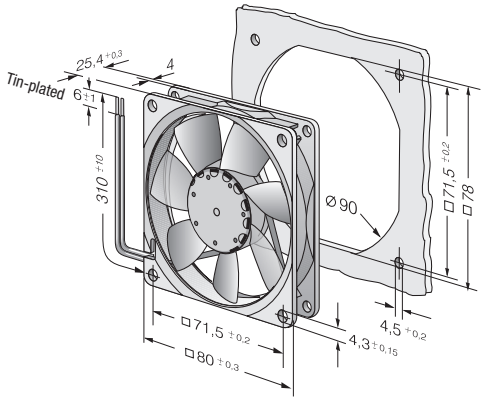

Max. 130 m³/h

**S-Panther**

# DC axial fans

☐ 80 x 32 mm



- **Material:** Housing: GRP[1] (PBT)
  Impeller: GRP[1] (PA)
- **Direction of air flow:** Exhaust over struts
- **Direction of rotation:** Counterclockwise, looking towards rotor
- **Connection:** Via single wires AWG 26, TR 64
- **Weight:** 160 g

- **Possible special versions:**
  (See chapter DC fans - specials)
  - Speed signal
  - Go / NoGo alarm
  - Alarm with speed limit
  - External temperature sensor
  - Internal temperature sensor
  - PWM control input
  - Analog control input
  - Moisture protection
  - Salt spray protection
  - Degree of protection: IP 54 / IP 68

1) Fiberglass-reinforced plastic

Series 8300 N
VWC0080PUFBS

**Nominal data**

| Type | Air flow m³/h | Air flow cfm | Nominal voltage VDC | Voltage range VDC | Sound pressure level dB(A) | Sound power level Bel(A) | Sintec sleeve bearings □ / Ball bearings ■ | Power consumption Watts | Nominal speed rpm⁻¹ | Temperature range °C | Service life $L_{10}$ (40 °C) ebm-papst standard / Service life $L_{10}$ ($T_{max}$) ebm-papst standard Hours | Life expectancy $L_{10IPC}$ (40 °C) see page 15 Hours | Curve |
|---|---|---|---|---|---|---|---|---|---|---|---|---|---|
| 8312 NL | 32 | 19 | **12** | 6...15 | 24 | 4.0 | ■ | 1.0 | 2 300 | -20...+75 | 105 000 / 42 500 | 180 000 | ① |
| 8312 NM | 50 | 30 | **12** | 6...15 | 32 | 4.5 | ■ | 1.5 | 3 300 | -20...+75 | 102 500 / 40 000 | 170 000 | ② |
| 8312 NN | 56 | 33 | **12** | 6...15 | 33 | 4.7 | ■ | 1.8 | 3 700 | -20...+75 | 97 500 / 37 500 | 162 500 | ③ |
| 8314 NN | 56 | 33 | **24** | 12...28 | 33 | 4.7 | ■ | 1.8 | 3 700 | -20...+75 | 97 500 / 37 500 | 162 500 | ③ |
| 8318 NN | 56 | 33 | **48** | 36...60 | 33 | 4.7 | ■ | 1.5 | 3 700 | -20...+75 | 97 500 / 37 500 | 162 500 | ③ |

Subject to change

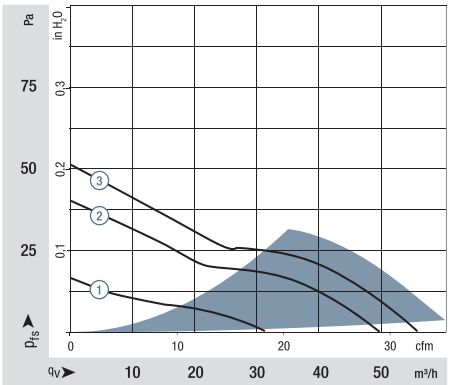


Air performance measured according to: ISO 5801.
Installation category A, without contact protection.
Noise: Total sound power level $L_{WA}$ ISO 10302 measured on a hemisphere with a radius of 2 m.
Sound pressure level $L_{pA}$ measured at 1 m distance from fan axis.
The values given are applicable only under the specified measuring conditions and may differ depending on the installation conditions.
In the event of deviation from the standard configuration, the parameters must be checked after installation!
For detailed information see
http://www.ebmpapst.com/general conditions

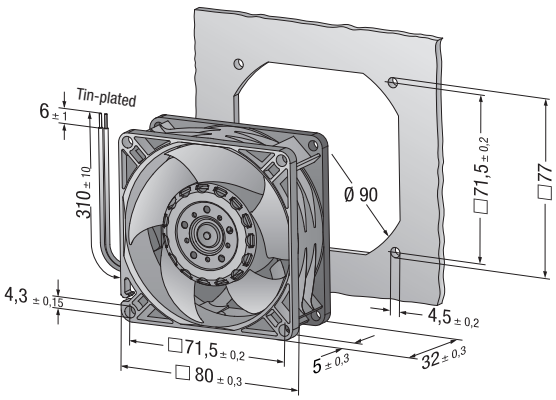




ebmpapst

Max. 130 m³/h

# S-Panther

# DC axial fans

☐ 80 x 32 mm



- **Material:** Housing: GRP[1] (PBT)
  Impeller: GRP[1] (PA)
- **Direction of air flow:** Exhaust over struts
- **Direction of rotation:** Counterclockwise, looking towards rotor
- **Connection:** Via single wires AWG 26, TR 64
- **Weight:** 160 g

- **Possible special versions:**
  (See chapter DC fans - specials)
  - Speed signal
  - Go / NoGo alarm
  - Alarm with speed limit
  - External temperature sensor
  - Internal temperature sensor
  - PWM control input
  - Analog control input
  - Moisture protection
  - Salt spray protection
  - Degree of protection: IP 54 / IP 68

1) Fiberglass-reinforced plastic

Series 8300 N
VWC0080PUFBS

| Nominal data | Air flow | Air flow | Nominal voltage | Voltage range | Sound pressure level | Sound power level | Sintec sleeve bearings / Ball bearings | Power consumption | Nominal speed | Temperature range | Service life $L_{10}$ (40 °C) ebm-papst standard / Service life $L_{10}$ ($T_{max}$) ebm-papst standard | Life expectancy $L_{10IPC}$ (40 °C) see page 15 | Curve |
|---|---|---|---|---|---|---|---|---|---|---|---|---|---|
| **Type** | **m³/h** | **cfm** | **VDC** | **VDC** | **dB(A)** | **Bel(A)** | □ / ■ | **Watts** | **rpm⁻¹** | **°C** | **Hours** | **Hours** | |
| 8312 NHL | 70 | 41 | **12** | 6...15 | 39 | 5.2 | ■ | 2.9 | 4 600 | -20...+75 | 92 500 / 37 500 | 155 000 | ① |
| 8312 NH | 80 | 47 | **12** | 6...15 | 42 | 5.5 | ■ | 4.0 | 5 300 | -20...+75 | 82 500 / 32 500 | 140 000 | ② |
| 8312 NHH | 95 | 56 | **12** | 6...15 | 48 | 6.0 | ■ | 5.4 | 6 300 | -20...+75 | 72 500 / 27 500 | 120 000 | ③ |
| 8312 NH3 | 115 | 68 | **12** | 6...13.2 | 53 | 6.6 | ■ | 9.4 | 7 600 | -20...+75 | 57 500 / 25 000 | 100 000 | ④ |
| 8312 NH4 | 130 | 77 | **12** | 6...12.8 | 56 | 6.9 | ■ | 12.6 | 8 500 | -20...+60 | 52 500 / 32 500 | 87 500 | ⑤ |
| 8314 NHL | 70 | 41 | **24** | 12...28 | 39 | 5.2 | ■ | 2.6 | 4 600 | -20...+75 | 92 500 / 37 500 | 155 000 | ① |
| 8314 NH | 80 | 47 | **24** | 12...28 | 42 | 5.5 | ■ | 3.6 | 5 300 | -20...+75 | 82 500 / 32 500 | 140 000 | ② |
| 8314 NHH | 95 | 56 | **24** | 12...28 | 48 | 6.0 | ■ | 5.0 | 6 300 | -20...+75 | 72 500 / 27 500 | 120 000 | ③ |
| 8314 NH3 | 115 | 68 | **24** | 12...28 | 53 | 6.6 | ■ | 8.8 | 7 600 | -20...+75 | 57 500 / 25 000 | 100 000 | ④ |
| 8314 N/2H3P | 115 | 68 | **24** | 18...28 | 53 | 6.6 | ■ | 8.0 | 7 600 | -20...+75 | 75 000 / 30 000 | 127 500 | ④ |
| 8318 NHL | 70 | 41 | **48** | 36...60 | 39 | 5.2 | ■ | 2.3 | 4 600 | -20...+75 | 92 500 / 37 500 | 155 000 | ① |
| 8318 NH | 80 | 47 | **48** | 36...60 | 42 | 5.5 | ■ | 3.5 | 5 300 | -20...+75 | 82 500 / 32 500 | 140 000 | ② |
| 8318 NHH | 95 | 56 | **48** | 36...60 | 48 | 6.0 | ■ | 5.8 | 6 300 | -20...+75 | 72 500 / 27 500 | 120 000 | ③ |
| 8318 NH3 | 115 | 68 | **48** | 36...52.8 | 53 | 6.6 | ■ | 8.9 | 7 600 | -20...+75 | 57 500 / 25 000 | 100 000 | ④ |

Änderungen vorbehalten

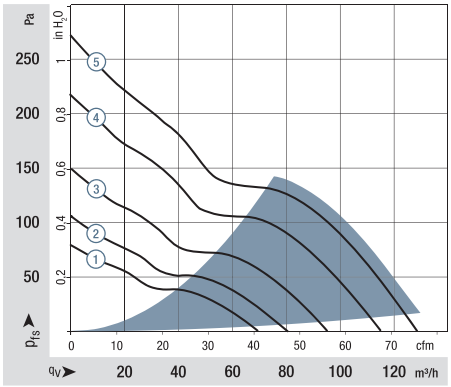


Air performance measured according to: ISO 5801.
Installation category A, without contact protection.
Noise: Total sound power level $L_{WA}$ ISO 10302 measured on a hemisphere with a radius of 2 m.
Sound pressure level $L_{pA}$ measured at 1 m distance from fan axis.
The values given are applicable only under the specified measuring conditions and may differ depending on the installation conditions.
In the event of deviation from the standard configuration, the parameters must be checked after installation!
For detailed information see
http://www.ebmpapst.com/general conditions

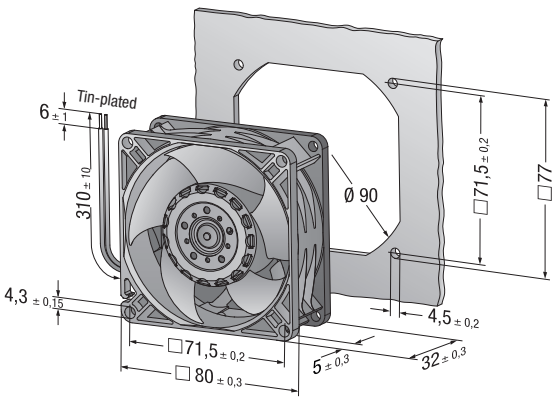

Max. 222 m³/h

# DC axial fans

☐ 80 x 38 mm



- **Material:** Housing: GRP[1] (PBT)
  Impeller: GRP[1] (PA)
- **Direction of air flow:** Exhaust over struts
- **Direction of rotation:** Counterclockwise, looking towards rotor
- **Connection:** Via single wires AWG 24 (H3 and H4: AWG 22), TR 64
- **Weight:** 160 g (H3 and H4: 200 g)

- **Possible special versions:**
  (See chapter DC fans - specials)
  - Speed signal
  - Go / NoGo alarm
  - Alarm with speed limit
  - External temperature sensor
  - Internal temperature sensor
  - PWM control input
  - Analog control input
  - Moisture protection
  - Degree of protection: IP 54 / IP 68

1) Fiberglass-reinforced plastic

Series 8200 J
VWC0080JUFBS

**Nominal data**

| Type | Air flow m³/h | Air flow cfm | Nominal voltage VDC | Voltage range VDC | Sound pressure level dB(A) | Sound power level Bel(A) | Sintec sleeve bearings / Ball bearings □/■ | Power consumption Watts | Nominal speed rpm⁻¹ | Temperature range °C | Service life $L_{10}$ (40 °C) ebm-papst standard / Service life $L_{10}$ ($T_{max}$) ebm-papst standard Hours | Life expectancy $L_{10IPC}$ (40 °C) see page 15 Hours | Curve |
|---|---|---|---|---|---|---|---|---|---|---|---|---|---|
| 8212 JN | 132 | 78 | **12** | 7...13.8 | 55 | 6.6 | ■ | 10 | 8 400 | -20...+70 | 62 500 / 32 500 | 105 000 | ① |
| 8212 JH3 S-Force | 190 | 112 | **12** | 6...13.8 | 66 | 7.3 | ■ | 26* | 12 000 | -20...+70 | 55 000 / 27 500 | 92 500 | ② |
| 8212 JH4 S-Force | 222 | 131 | **12** | 6...13.8 | 71 | 7.8 | ■ | 39* | 14 000 | -20...+70 | 50 000 / 25 000 | 85 000 | ③ |
| 8214 JN | 132 | 78 | **24** | 18...26.4 | 55 | 6.6 | ■ | 11 | 8 400 | -20...+70 | 62 500 / 32 500 | 105 000 | ① |
| 8214 JH3 S-Force | 190 | 112 | **24** | 12...27.6 | 66 | 7.3 | ■ | 26* | 12 000 | -20...+70 | 55 000 / 27 500 | 92 500 | ② |
| 8214 JH4 S-Force | 222 | 131 | **24** | 12...27.6 | 71 | 7.8 | ■ | 38* | 14 000 | -20...+70 | 50 000 / 25 000 | 85 000 | ③ |
| 8218 JN | 132 | 78 | **48** | 36...53 | 55 | 6.6 | ■ | 11 | 8 400 | -20...+70 | 62 500 / 32 500 | 105 000 | ① |
| 8218 JH3 S-Force | 190 | 112 | **48** | 36...53 | 66 | 7.3 | ■ | 25* | 12 000 | -20...+70 | 55 000 / 27 500 | 92 500 | ② |
| 8218 JH4 S-Force | 222 | 131 | **48** | 20...58 | 71 | 7.8 | ■ | 36* | 14 000 | -20...+70 | 50 000 / 25 000 | 85 000 | ③ |

Subject to change

8200 JH3 and JH4 also available as standard with PWM control input and speed signal.
Speed control range from 2000 rpm⁻¹ up to maximum nominal speed. Standstill at 0% PWM, maximum speed if control cable is interrupted.
* Power consumption at free air flow. These values can be significantly higher in the operating point.

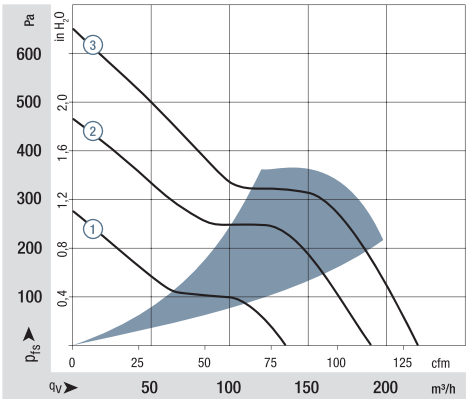


Air performance measured according to: ISO 5801.
Installation category A, without contact protection.
Noise: Total sound power level $L_{WA}$ ISO 10302 measured on a hemisphere with a radius of 2 m.
Sound pressure level $L_{pA}$ measured at 1 m distance from fan axis.
The values given are applicable only under the specified measuring conditions and may differ depending on the installation conditions.
In the event of deviation from the standard configuration, the parameters must be checked after installation!
For detailed information see
http://www.ebmpapst.com/general conditions

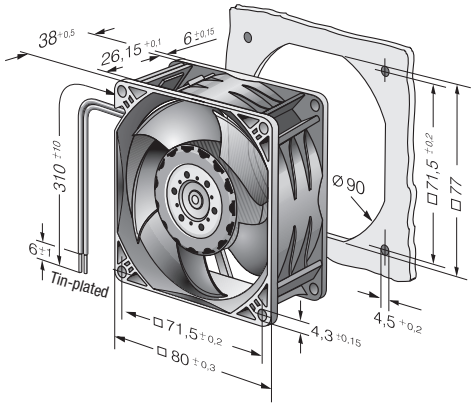




ebmpapst

Max. 232 m³/h

S-Force

# DC axial fan unit

☐ 80 x 80 mm



- **Material:** Housing: GRP[1)] (PBT)
  Impeller: GRP[1)] (PA)
- **Direction of air flow:** Exhaust over struts
- **Direction of rotation:** Counterclockwise, looking towards rotor
- **Connection:** Via single wires AWG 22, TR 64
- **Weight:** 430 g

- **Possible special versions:**
  (See chapter DC fans - specials)
  - Speed signal
  - Go / NoGo alarm
  - Alarm with speed limit
  - External temperature sensor
  - Internal temperature sensor
  - PWM control input
  - Analog control input
  - Moisture protection
  - Degree of protection: IP 54

1) Fiberglass-reinforced plastic

Series CoR 8200 J
VWK0075XUFBS
Co-Rotating with Honeycomb

**Nominal data**

| Type | Air flow m³/h | Air flow cfm | **Nominal voltage** VDC | Voltage range VDC | Sound pressure level dB(A) | Sound power level Bel(A) | Sintec sleeve bearings / Ball bearings □/■ | Power consumption Watts | Nominal speed rpm⁻¹ | Temperature range °C | Service life $L_{10}$ (40 °C) ebm-papst standard Hours | Service life $L_{10}$ ($T_{max}$) ebm-papst standard Hours | Life expectancy $L_{10IPC}$ (40 °C) see page 15 Hours |
|---|---|---|---|---|---|---|---|---|---|---|---|---|---|
| CoR 8212 J/2H4P | 232 | 136 | **12** | 6...13.8 | 90 | 8.7 | ■ | 70** | 14 000 | -20...+70 | 50 000 / 25 000 | | 85 000 |
| CoR 8214 J* | 232 | 136 | **24** | 12...27.6 | 90 | 8.7 | ■ | 67** | 14 000 | -20...+70 | 50 000 / 25 000 | | 85 000 |
| CoR 8218 J* | 232 | 136 | **48** | 20...58 | 90 | 8.7 | ■ | 65** | 14 000 | -20...+70 | 50 000 / 25 000 | | 85 000 |

Subject to change
* On request

** Power consumption at free air flow. These values can be significantly higher in the operating point.

| | | n rpm⁻¹ | $P_{ed}$ W | $Lw_A$ dB(A) | $L_{10}$ (40 °C) | $L_{10}$ ($T_{max}$) | $L_{10IPC}$ (40 °C) |
|---|---|---|---|---|---|---|---|
| 100% PWM | ① ❶ | 14 000 | 65 | 90 | 50 000 | 25 000 | 85 000 |
| | ① ❷ | 14 000 | 75 | 89 | 50 000 | 25 000 | 85 000 |
| | ① ❸ | 14 000 | 84 | 88 | 55 000 | 27 500 | 92 500 |
| | ① ❹ | 14 000 | 86 | 87 | 55 000 | 27 500 | 92 500 |
| | ① ❺ | 14 000 | 87 | 87 | 57 500 | 27 500 | 97 500 |
| 80% PWM | ② ❻ | 11 250 | 36 | 85 | 60 000 | 30 000 | 102 500 |
| | ② ❼ | 11 250 | 41 | 83 | 62 500 | 30 000 | 105 000 |
| | ② ❽ | 11 250 | 45 | 83 | 62 500 | 32 500 | 105 000 |
| | ② ❾ | 11 250 | 46 | 81 | 65 000 | 32 500 | 110 000 |
| | ② ❿ | 11 250 | 46 | 82 | 65 000 | 32 500 | 110 000 |
| 50% PWM | ③ ⓫ | 6 800 | 12 | 73 | 82 500 | 42 500 | 140 000 |
| | ③ ⓬ | 6 800 | 13 | 72 | 82 500 | 42 500 | 140 000 |
| | ③ ⓭ | 6 800 | 14 | 71 | 82 500 | 42 500 | 140 000 |
| | ③ ⓮ | 6 800 | 15 | 71 | 82 500 | 42 500 | 140 000 |
| | ③ ⓯ | 6 800 | 15 | 71 | 82 500 | 42 500 | 140 000 |

Power consumption $P_{ed}$ refer to CoR 8218 J.

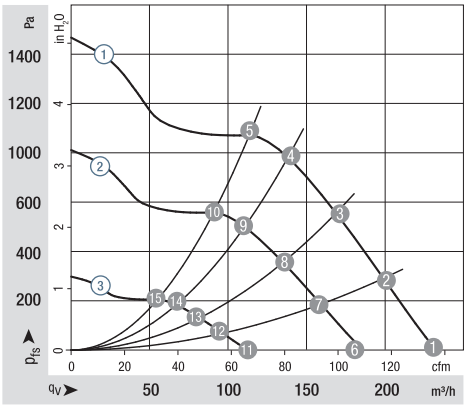


Air performance measured according to: ISO 5801.
Installation category A, without contact protection.
Noise: Total sound power level $L_{WA}$ ISO 10302 measured on a hemisphere with a radius of 2 m.
Sound pressure level $L_pA$ measured at 1 m distance from fan axis.
The values given are applicable only under the specified measuring conditions and may differ depending on the installation conditions.
In the event of deviation from the standard configuration, the parameters must be checked after installation!
For detailed information see http://www.ebmpapst.com/general conditions

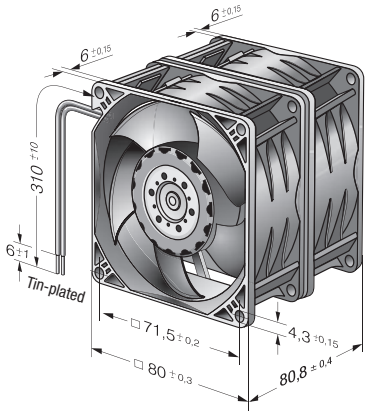

Max. 102 m³/h

# DC axial fans

☐ 92 x 25 mm



- **Material:** Housing: GRP[1] (PBT)
  Impeller: GRP[1] (PA)
- **Direction of air flow:** Exhaust over struts
- **Direction of rotation:** Counterclockwise, looking towards rotor
- **Connection:** Via single wires AWG 24, TR 64
- **Weight:** 100 g

- **Possible special versions:**
  (See chapter DC fans - specials)
  - Speed signal
  - Go / NoGo alarm
  - Alarm with speed limit
  - External temperature sensor
  - Internal temperature sensor
  - PWM control input
  - Analog control input
  - Moisture protection
  - Degree of protection: IP 54 / IP 68

1) Fiberglass-reinforced plastic

| Series 3400 N<br>VWC0092YUEBS<br>**Nominal data** | Air flow | Air flow | **Nominal voltage** | Voltage range | Sound pressure level | Sound power level | Sintec sleeve bearings / Ball bearings | Power consumption | Nominal speed | Temperature range | Service life $L_{10}$ (40 °C) ebm-papst standard / Service life $L_{10}$ ($T_{max}$) ebm-papst standard | Life expectancy $L_{10IPC}$ (40 °C) see page 15 | Curve |
|---|---|---|---|---|---|---|---|---|---|---|---|---|---|
| **Type** | m³/h | cfm | VDC | VDC | dB(A) | Bel(A) | □ / ■ | Watts | rpm⁻¹ | °C | Hours | Hours | |
| 3412 NGLE | 61 | 35.9 | **12** | 8...15 | 23 | 4.0 | □ | 1.1 | 1 950 | -20...+80 | 80 000 / 22 500 | 135 000 | ① |
| 3412 NLE | 61 | 35.9 | **12** | 8...15 | 23 | 4.0 | ■ | 0.8 | 1 950 | -20...+85 | 80 000 / 17 500 | 135 000 | ① |
| 3412 NGME | 72 | 42.4 | **12** | 8...15 | 28 | 4.3 | □ | 1.6 | 2 300 | -20...+75 | 75 000 / 27 500 | 127 500 | ② |
| 3412 NME | 72 | 42.4 | **12** | 8...15 | 28 | 4.3 | ■ | 1.1 | 2 300 | -20...+75 | 75 000 / 27 500 | 127 500 | ② |
| 3412 NG | 82 | 48.2 | **12** | 8...15 | 33 | 4.6 | □ | 2.2 | 2 700 | -20...+70 | 70 000 / 35 000 | 117 500 | ③ |
| 3412 N | 82 | 48.2 | **12** | 8...15 | 33 | 4.6 | ■ | 2.2 | 2 700 | -20...+70 | 70 000 / 35 000 | 117 500 | ③ |
| 3412 NGH | 94 | 55.3 | **12** | 8...15 | 36 | 5.0 | □ | 2.3 | 3 000 | -20...+70 | 70 000 / 35 000 | 117 500 | ④ |
| 3412 NH | 94 | 55.3 | **12** | 8...15 | 36 | 5.0 | ■ | 2.1 | 3 000 | -20...+70 | 70 000 / 35 000 | 117 500 | ④ |
| 3412 NGHH | 102 | 60.0 | **12** | 8...13.2 | 39 | 5.1 | □ | 3.2 | 3 250 | -20...+60 | 70 000 / 45 000 | 117 500 | ⑤ |
| 3412 NHH | 102 | 60.0 | **12** | 8...13.2 | 39 | 5.1 | ■ | 2.9 | 3 250 | -20...+60 | 70 000 / 45 000 | 117 500 | ⑤ |
| 3412 NHH-379 | 102 | 60.0 | **12** | 8...15 | 39 | 5.1 | ■ | 2.7 | 3 250 | -20...+70 | 70 000 / 35 000 | 117 500 | ⑤ |
| 3414 NGL | 61 | 35.9 | **24** | 18...28 | 23 | 4.0 | □ | 1.4 | 1 950 | -20...+70 | 80 000 / 40 000 | 135 000 | ① |
| 3414 NL | 61 | 35.9 | **24** | 18...28 | 23 | 4.0 | ■ | 1.1 | 1 950 | -20...+70 | 80 000 / 40 000 | 135 000 | ① |
| 3414 NGM | 72 | 42.4 | **24** | 18...28 | 28 | 4.3 | □ | 1.7 | 2 300 | -20...+70 | 75 000 / 37 500 | 127 500 | ② |
| 3414 NM | 72 | 42.4 | **24** | 18...28 | 28 | 4.3 | ■ | 1.4 | 2 300 | -20...+70 | 75 000 / 37 500 | 127 500 | ② |
| 3414 NG | 82 | 48.2 | **12** | 8...15 | 33 | 4.6 | □ | 2.3 | 2 700 | -20...+70 | 70 000 / 35 000 | 117 500 | ③ |
| 3414 N | 82 | 48.2 | **12** | 8...15 | 33 | 4.6 | ■ | 2.3 | 2 700 | -20...+70 | 70 000 / 35 000 | 117 500 | ③ |
| 3414 NGH | 94 | 55.3 | **24** | 18...26 | 36 | 5.0 | □ | 3.0 | 3 000 | -20...+70 | 70 000 / 35 000 | 117 500 | ④ |
| 3414 NH | 94 | 55.3 | **24** | 18...26 | 36 | 5.0 | ■ | 2.3 | 3 000 | -20...+70 | 70 000 / 35 000 | 117 500 | ④ |
| 3414 NGHH | 102 | 60.0 | **24** | 18...26 | 39 | 5.1 | □ | 3.2 | 3 250 | -20...+70 | 70 000 / 35 000 | 117 500 | ⑤ |
| 3414 NGHH-389 | 102 | 60.0 | **24** | 18...28 | 39 | 5.1 | □ | 3.2 | 3 250 | -20...+70 | 70 000 / 35 000 | 117 500 | ⑤ |
| 3414 NHH | 102 | 60.0 | **24** | 18...26 | 39 | 5.1 | ■ | 3.1 | 3 250 | -20...+70 | 70 000 / 35 000 | 117 500 | ⑤ |
| 3414 NHH-386 | 102 | 60.0 | **24** | 18...28 | 39 | 5.1 | ■ | 3.2 | 3 250 | -20...+70 | 70 000 / 35 000 | 117 500 | ⑤ |
| 3418 N | 82 | 48.2 | **12** | 8...15 | 33 | 4.6 | ■ | 2.4 | 2 700 | -20...+70 | 70 000 / 35 000 | 117 500 | ③ |

Other 48 VDC models on request.

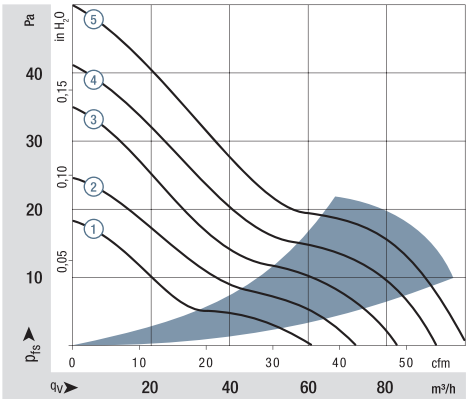


Air performance measured according to: ISO 5801.
Installation category A, without contact protection.
Noise: Total sound power level $L_{WA}$ ISO 10302 measured on a hemisphere with a radius of 2 m.
Sound pressure level $L_{pA}$ measured at 1 m distance from fan axis.
The values given are applicable only under the specified measuring conditions and may differ depending on the installation conditions.
In the event of deviation from the standard configuration, the parameters must be checked after installation!
For detailed information see
http://www.ebmpapst.com/general conditions

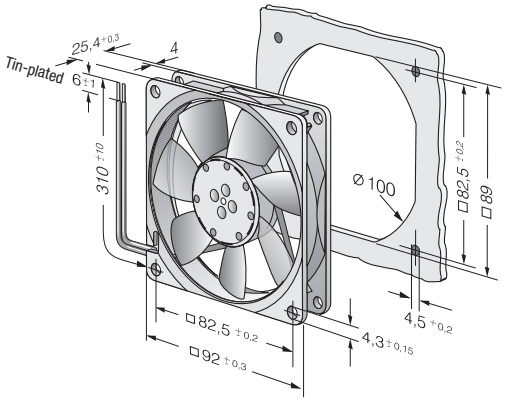




**Finger guards from p. 254**

ebmpapst

Max. 80 m³/h

**S-Panther**

# DC axial fans

☐ 92 x 32 mm



- **Material:** Housing: GRP[1)] (PBT)
  Impeller: GRP[1)] (PA)
- **Direction of air flow:** Exhaust over struts
- **Direction of rotation:** Clockwise, looking towards rotor
- **Connection:** Via single wires AWG 24 UL 1061, TR 64
- **Weight:** 190 g

- **Possible special versions:**
  (See chapter DC fans - specials)
  - Speed signal
  - Go / NoGo alarm
  - External temperature sensor
  - Internal temperature sensor
  - PWM control input
  - Analog control input
  - Moisture protection
  - Salt spray protection
  - Degree of protection: IP 54 / IP 68

1) Fiberglass-reinforced plastic

Series 3300 N
VWC0092PUGBS

**Nominal data**

| Type | Air flow m³/h | Air flow cfm | **Nominal voltage** VDC | Voltage range VDC | Sound pressure level dB(A) | Sound power level Bel(A) | Sintec sleeve bearings / Ball bearings □/■ | Power consumption Watts | Nominal speed rpm⁻¹ | Temperature range °C | Service life $L_{10}$ (40 °C) ebm-papst standard Hours | Service life $L_{10}$ ($T_{max}$) ebm-papst standard Hours | Life expectancy $L_{10IPC}$ (40 °C) see page 15 Hours | Curve |
|---|---|---|---|---|---|---|---|---|---|---|---|---|---|---|
| 3312 NL | 56 | 33 | **12** | 6...15 | 24 | 4.0 | ■ | 0.8 | 1 850 | -20...+75 | 87 500 / 35 000 | | 147 500 | ① |
| 3312 NM | 68 | 40 | **12** | 6...15 | 29 | 4.3 | ■ | 1.1 | 2 250 | -20...+75 | 80 000 / 32 500 | | 135 500 | ② |
| 3312 NN | 80 | 47 | **12** | 6...15 | 35 | 4.7 | ■ | 1.8 | 2 650 | -20...+75 | 77 500 / 30 000 | | 130 000 | ③ |
| 3314 NL | 56 | 33 | **24** | 12...28 | 24 | 4.0 | ■ | 0.8 | 1 850 | -20...+75 | 87 500 / 35 000 | | 147 500 | ① |
| 3314 NM | 68 | 40 | **24** | 12...28 | 29 | 4.3 | ■ | 1.2 | 2 250 | -20...+75 | 80 000 / 32 500 | | 135 500 | ② |
| 3314 NN | 80 | 47 | **24** | 12...28 | 35 | 4.7 | ■ | 1.8 | 2 650 | -20...+75 | 77 500 / 30 000 | | 130 000 | ③ |
| 3318 NN | 80 | 47 | **48** | 36...60 | 35 | 4.7 | ■ | 1.8 | 2 650 | -20...+75 | 77 500 / 30 000 | | 130 000 | ③ |

Subject to change

| | | n rpm⁻¹ | $P_{ed}$ W | $Lw_A$ dB(A) | $L_{10}$ (40 °C) | $L_{10}$ ($T_{max}$) | $L_{10IPC}$ (40 °C) |
|---|---|---|---|---|---|---|---|
| ① | ❶ | 1 870 | 0.9 | 39 | 82 500 | 47 500 | 140 000 |
| ① | ❷ | 1 860 | 0.9 | 39 | 80 000 | 45 000 | 135 000 |
| ① | ❸ | 1 860 | 0.9 | 39 | 80 000 | 45 000 | 135 000 |
| ① | ❹ | 1 870 | 0.9 | 39 | 77 500 | 42 500 | 130 000 |
| ② | ❶ | 2 220 | 1.2 | 42 | 77 500 | 42 500 | 130 000 |
| ② | ❷ | 2 220 | 1.3 | 42 | 75 000 | 42 500 | 127 500 |
| ② | ❸ | 2 210 | 1.3 | 42 | 72 500 | 40 000 | 122 500 |
| ② | ❹ | 2 220 | 1.3 | 44 | 72 500 | 40 000 | 122 500 |

| | | n rpm⁻¹ | $P_{ed}$ W | $Lw_A$ dB(A) | $L_{10}$ (40 °C) | $L_{10}$ ($T_{max}$) | $L_{10IPC}$ (40 °C) |
|---|---|---|---|---|---|---|---|
| ③ | ❶ | 2 650 | 1.9 | 46 | 75 000 | 42 500 | 127 500 |
| ③ | ❷ | 2 630 | 1.9 | 47 | 72 500 | 40 000 | 122 500 |
| ③ | ❸ | 2 630 | 1.9 | 47 | 70 000 | 40 000 | 117 500 |
| ③ | ❹ | 2 650 | 1.9 | 49 | 70 000 | 40 000 | 117 500 |

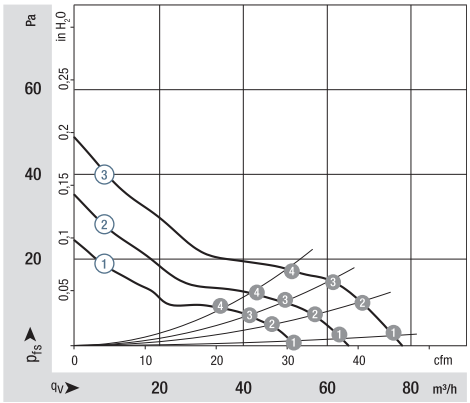


Air performance measured according to: ISO 5801.
Installation category A, without contact protection.
Noise: Total sound power level $L_{WA}$ ISO 10302 measured on a hemisphere with a radius of 2 m.
Sound pressure level $L_pA$ measured at 1 m distance from fan axis.
The values given are applicable only under the specified measuring conditions and may differ depending on the installation conditions.
In the event of deviation from the standard configuration, the parameters must be checked after installation!
For detailed information see
http://www.ebmpapst.com/general conditions

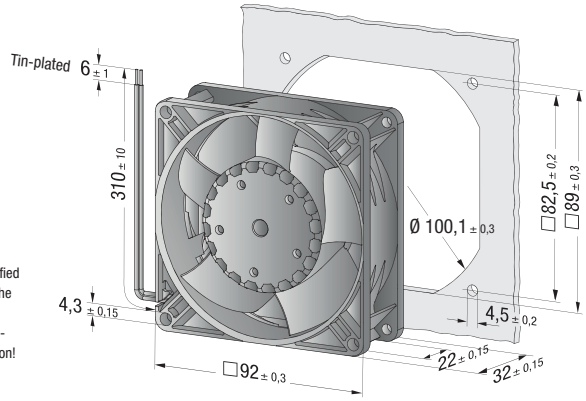

Max. 133 m³/h

**S-Panther**

# DC axial fans

☐ 92 x 32 mm



- **Material:** Housing: GRP[1] (PBT)
  Impeller: GRP[1] (PA)
- **Direction of air flow:** Exhaust over struts
- **Direction of rotation:** Clockwise, looking towards rotor
- **Connection:** Via single wires AWG 24 UL 1061, TR 64
- **Weight:** 190 g

- **Possible special versions:**
  (See chapter DC fans - specials)
  - Speed signal
  - Go / NoGo alarm
  - External temperature sensor
  - Internal temperature sensor
  - PWM control input
  - Analog control input
  - Moisture protection
  - Salt spray protection
  - Degree of protection: IP 54 / IP 68

1) Fiberglass-reinforced plastic

| Series 3300 N<br>VWC0092PUGBS<br>**Nominal data** | Air flow | Air flow | **Nominal voltage** | Voltage range | Sound pressure level | Sound power level | Sintec sleeve bearings<br>Ball bearings | Power consumption | Nominal speed | Temperature range | Service life $L_{10}$ (40 °C)<br>ebm-papst standard | Service life $L_{10}$ ($T_{max}$)<br>ebm-papst standard | Life expectancy $L_{10IPC}$ (40 °C) see page 15 | Curve |
|---|---|---|---|---|---|---|---|---|---|---|---|---|---|---|
| **Type** | **m³/h** | **cfm** | **VDC** | **VDC** | **dB(A)** | **Bel(A)** | □/■ | **Watts** | **rpm⁻¹** | **°C** | **Hours** | | **Hours** | |
| 3312 NH | 93 | 55 | **12** | 6...15 | 38 | 5.1 | ■ | 2.8 | 3 050 | -20...+75 | 72 500 / 30 000 | | 122 500 | ④ |
| 3312 NHH | 107 | 63 | **12** | 6...15 | 42 | 5.4 | ■ | 3.4 | 3 450 | -20...+75 | 67 500 / 27 500 | | 115 000 | ⑤ |
| 3312 NH3 | 133 | 78 | **12** | 6...14 | 50 | 6.0 | ■ | 6.9 | 4 350 | -20...+70 | 60 000 / 30 000 | | 102 500 | ⑥ |
| 3312 N/2 H3P | 133 | 78 | **12** | 7...13.2 | 50 | 6.0 | ■ | 5.5 | 4 350 | -20...+80 | 60 000 / 20 000 | | 102 500 | ⑥ |
| 3314 NH | 93 | 55 | **24** | 12...28 | 38 | 5.1 | ■ | 2.6 | 3 050 | -20...+75 | 72 500 / 30 000 | | 122 500 | ④ |
| 3314 NHH | 107 | 63 | **24** | 12...28 | 42 | 5.4 | ■ | 3.4 | 3 450 | -20...+75 | 67 500 / 27 500 | | 115 000 | ⑤ |
| 3314 NH3 | 133 | 78 | **24** | 12...28 | 50 | 6.0 | ■ | 6.0 | 4 350 | -20...+75 | 60 000 / 25 000 | | 102 500 | ⑥ |
| 3314 N/2 H3P | 133 | 78 | **24** | 14...26.4 | 50 | 6.0 | ■ | 5.7 | 4 350 | -20...+80 | 60 000 / 20 000 | | 102 500 | ⑥ |
| 3318 NH | 93 | 55 | **48** | 36...60 | 38 | 5.1 | ■ | 2.6 | 3 050 | -20...+75 | 72 500 / 30 000 | | 122 500 | ④ |
| 3318 NHH | 107 | 63 | **48** | 36...60 | 42 | 5.4 | ■ | 3.4 | 3 450 | -20...+75 | 67 500 / 27 500 | | 115 000 | ⑤ |
| 3318 NH3 | 133 | 78 | **48** | 36...58 | 50 | 6.0 | ■ | 6.5 | 4 350 | -20...+75 | 60 000 / 25 000 | | 102 500 | ⑥ |
| 3318 N/2 H3P | 133 | 78 | **48** | 36...56 | 50 | 6.0 | ■ | 6.1 | 4 350 | -20...+80 | 60 000 / 20 000 | | 102 500 | ⑥ |

Subject to change

| | n rpm⁻¹ | $P_{ed}$ W | $Lw_A$ dB(A) | $L_{10}$ (40 °C) | $L_{10}$ ($T_{max}$) | $L_{10IPC}$ (40 °C) |
|---|---|---|---|---|---|---|
| ④ ❶ | 3 000 | 2.7 | 54 | 70 000 | 40 000 | 117 500 |
| ④ ❷ | 3 000 | 2.7 | 50 | 67 500 | 37 500 | 115 000 |
| ④ ❸ | 3 010 | 2.7 | 50 | 65 000 | 37 500 | 110 000 |
| ④ ❹ | 3 040 | 2.6 | 52 | 65 000 | 37 500 | 110 000 |
| ⑤ ❶ | 3 410 | 3.6 | 55 | 65 000 | 37 500 | 110 000 |
| ⑤ ❷ | 3 400 | 3.7 | 54 | 62 500 | 35 000 | 105 000 |
| ⑤ ❸ | 3 410 | 3.6 | 56 | 60 000 | 32 500 | 102 500 |
| ⑤ ❹ | 3 440 | 3.5 | 58 | 60 000 | 32 500 | 102 500 |

| | n rpm⁻¹ | $P_{ed}$ W | $Lw_A$ dB(A) | $L_{10}$ (40 °C) | $L_{10}$ ($T_{max}$) | $L_{10IPC}$ (40 °C) |
|---|---|---|---|---|---|---|
| ⑥ ❶ | 4 300 | 6.6 | 61 | 57 500 | 32 500 | 97 500 |
| ⑥ ❷ | 4 260 | 6.7 | 62 | 55 000 | 30 000 | 92 500 |
| ⑥ ❸ | 4 280 | 6.7 | 63 | 55 000 | 30 000 | 92 500 |
| ⑥ ❹ | 4 340 | 6.5 | 65 | 55 000 | 30 000 | 92 500 |

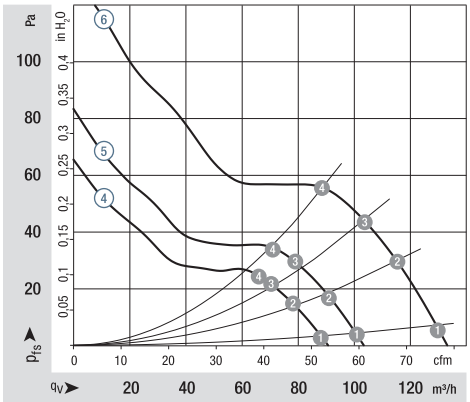


Air performance measured according to: ISO 5801.
Installation category A, without contact protection.
Noise: Total sound power level $L_{WA}$ ISO 10302 measured on a hemisphere with a radius of 2 m.
Sound pressure level $L_pA$ measured at 1 m distance from fan axis.
The values given are applicable only under the specified measuring conditions and may differ depending on the installation conditions.
In the event of deviation from the standard configuration, the parameters must be checked after installation!
For detailed information see
http://www.ebmpapst.com/general conditions

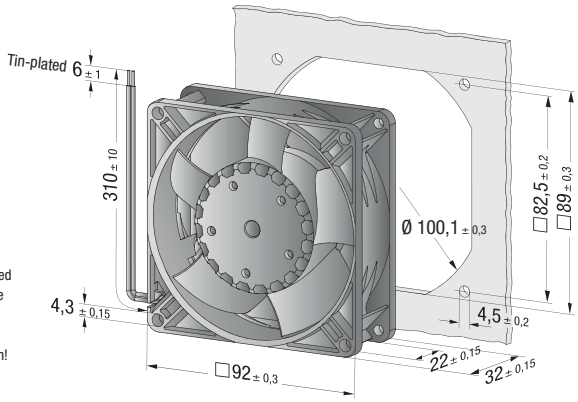




ebmpapst

Max. 280 m³/h

# DC axial fans

☐ 92 x 38 mm



- **Material:** Housing: GRP[1)] (PBT)
  Impeller: GRP[1)] (PA)
- **Direction of air flow:** Exhaust over struts
- **Direction of rotation:** Clockwise, looking towards rotor
- **Connection:** Via single wires AWG 24 (H3 and H4: AWG 22), TR 64
- **Weight:** 240 g (H3 and H4: 280 g)

- **Possible special versions:**
  (See chapter DC fans - specials)
  - Speed signal
  - Go / NoGo alarm
  - Alarm with speed limit
  - External temperature sensor
  - Internal temperature sensor
  - PWM control input
  - Analog control input
  - Moisture protection
  - Degree of protection: IP 54 / IP 68

1) Fiberglass-reinforced plastic

Series 3200 J
VWC0092JUGBS

**Nominal data**

| Type | Air flow m³/h | Air flow cfm | **Nominal voltage** VDC | Voltage range VDC | Sound pressure level dB(A) | Sound power level Bel(A) | Sintec sleeve bearings □ / Ball bearings ■ | Power consumption* Watts | Nominal speed rpm⁻¹ | Temperature range °C | Service life $L_{10}$ (40 °C) ebm-papst standard / Service life $L_{10}$ ($T_{max}$) ebm-papst standard Hours | Life expectancy $L_{10IPC}$ (40 °C) see page 15 Hours | Curve |
|---|---|---|---|---|---|---|---|---|---|---|---|---|---|
| 3212 JN | 130 | 77 | **12** | 7...13.8 | 51 | 6.1 | ■ | 7.5 | 6 000 | -20 ...+70 | 70 000 / 35 000 | 117 500 | ① |
| 3212 JH | 146 | 86 | **12** | 7...15 | 55 | 6.4 | ■ | 9.0 | 6 800 | -20 ...+70 | 70 000 / 35 000 | 117 500 | ② |
| 3212 JH3 *S-Force* | 237 | 139 | **12** | 6...13.8 | 69 | 7.8 | ■ | 31.0* | 11 000 | -20 ...+70 | 65 000 / 32 500 | 110 000 | ③ |
| 3212 JH4 *S-Force* | 280 | 165 | **12** | 6...13.8 | 73 | 8.2 | ■ | 50.0* | 13 000 | -20 ...+70 | 60 000 / 30 000 | 110 000 | ④ |
| 3214 JN | 130 | 77 | **24** | 11...28 | 51 | 6.1 | ■ | 6.5 | 6 000 | -20 ...+70 | 70 000 / 35 000 | 117 500 | ① |
| 3214 JH | 146 | 86 | **24** | 12...30 | 55 | 6.4 | ■ | 9.0 | 6 800 | -20 ...+70 | 70 000 / 35 000 | 117 500 | ② |
| 3214 JH3 *S-Force* | 237 | 139 | **24** | 12...27.6 | 69 | 7.8 | ■ | 30.0* | 11 000 | -20 ...+70 | 65 000 / 32 500 | 110 000 | ③ |
| 3214 JH4 *S-Force* | 280 | 165 | **24** | 12...27.6 | 73 | 8.2 | ■ | 50.0* | 13 000 | -20 ...+70 | 60 000 / 30 000 | 110 000 | ④ |
| 3218 JN | 130 | 77 | **48** | 36...56 | 51 | 6.1 | ■ | 7.0 | 6 000 | -20 ...+70 | 70 000 / 35 000 | 117 500 | ① |
| 3218 JH | 146 | 86 | **48** | 36...53 | 55 | 6.4 | ■ | 9.5 | 6 800 | -20 ...+70 | 70 000 / 35 000 | 117 500 | ② |
| 3218 JH3 *S-Force* | 237 | 139 | **48** | 20...58.0 | 69 | 7.8 | ■ | 29.0* | 11 000 | -20 ...+70 | 65 000 / 32 500 | 110 000 | ③ |
| 3218 JH4 *S-Force* | 280 | 165 | **48** | 20...58.0 | 73 | 8.2 | ■ | 50.0* | 13 000 | -20 ...+70 | 60 000 / 30 000 | 110 000 | ④ |

Subject to change

3200 JH3 and JH4 also available as standard with PWM control input and speed signal.
Speed control range from 2000 rpm⁻¹ up to maximum nominal speed. Standstill at 0% PWM, maximum speed if control cable is interrupted.
* Power consumption at free air flow. These values can be significantly higher in the operating point.

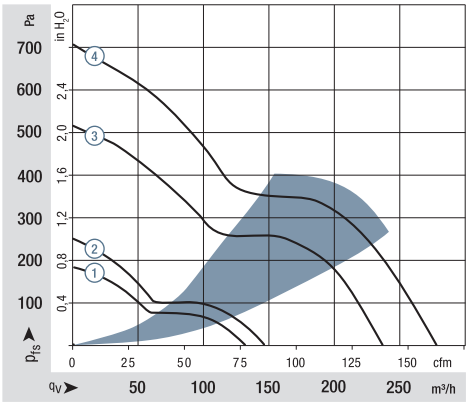


Air performance measured according to: ISO 5801.
Installation category A, without contact protection.
Noise: Total sound power level $L_{WA}$ ISO 10302 measured on a hemisphere with a radius of 2 m.
Sound pressure level $L_{pA}$ measured at 1 m distance from fan axis.
The values given are applicable only under the specified measuring conditions and may differ depending on the installation conditions.
In the event of deviation from the standard configuration, the parameters must be checked after installation!
For detailed information see
http://www.ebmpapst.com/general conditions

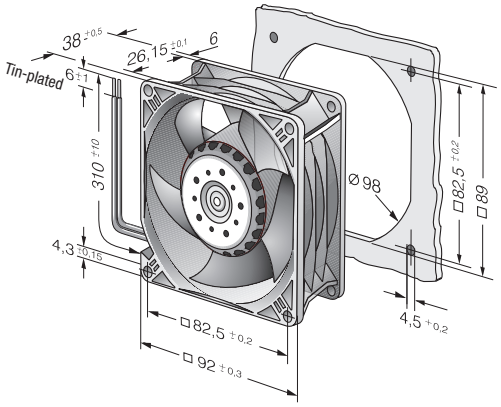

Max. 270 m³/h

# S-Panther

# DC axial fans

☐ 92 x 38 mm



- **Material:** Housing: GRP[1] (PBT)
  Impeller: GRP[1] (PA)
- **Direction of air flow:** Exhaust over struts
- **Direction of rotation:** Clockwise, looking towards rotor
- **Connection:** Via single wires AWG 22, TR 64
- **Weight:** 240 g

- **Possible special versions:**
  (See chapter DC fans - specials)
  - Speed signal
  - Go / NoGo alarm
  - External temperature sensor
  - Internal temperature sensor
  - PWM control input
  - Analog control input
  - Moisture protection
  - Salt spray protection
  - Degree of protection: IP 54 / IP 68

1) Fiberglass-reinforced plastic

Series 3250 J
VWC0092PUGCS

**Nominal data**

| Type | Air flow m³/h | Air flow cfm | **Nominal voltage** VDC | Voltage range VDC | Sound pressure level dB(A) | Sound power level Bel(A) | Sintec sleeve bearings / Ball bearings □/■ | Power consumption* Watts | Nominal speed rpm⁻¹ | Temperature range °C | Service life $L_{10}$ (40 °C) ebm-papst standard / Service life $L_{10}$ ($T_{max}$) ebm-papst standard Hours | Life expectancy $L_{10IPC}$ (40 °C) see page 15 Hours | Curve |
|---|---|---|---|---|---|---|---|---|---|---|---|---|---|
| 3252 JH | 140 | 82 | **12** | 7...13.2 | 46 | 5.8 | ■ | 7.0 | 4 100 | -20...+70 | 100 000 / 50 000 | 170 000 | ① |
| 3252 JH3 | 270 | 158 | **12** | 7...13.2 | 64 | 7.6 | ■ | 35.0 | 7 450 | -20...+70 | 85 000 / 42 500 | 142 500 | ③ |
| 3254 JH | 140 | 82 | **24** | 14...26.4 | 46 | 5.8 | ■ | 7.0 | 4 100 | -20...+70 | 100 000 / 50 000 | 170 000 | ① |
| 3254 J/2 H3P | 270 | 158 | **24** | 14...26.4 | 64 | 7.6 | ■ | 35.0 | 7 450 | -20...+70 | 85 000 / 42 500 | 142 500 | ③ |
| 3258 JH | 140 | 82 | **48** | 36...56.0 | 46 | 5.8 | ■ | 7.0 | 4 100 | -20...+70 | 100 000 / 50 000 | 170 000 | ① |
| 3258 J/2 HHP | 235 | 138 | **48** | 36...56.0 | 59 | 7.0 | ■ | 24.3 | 6 650 | -20...+70 | 90 000 / 45 000 | 152 500 | ② |
| 3258 J/2 H3P | 270 | 158 | **48** | 36...56.0 | 64 | 7.6 | ■ | 34.0 | 7 450 | -20...+70 | 85 000 / 42 500 | 142 500 | ③ |

Änderungen vorbehalten

* Power consumption at free air flow. These values can be significantly higher in the operating point.

| | | n rpm⁻¹ | $P_{ed}$ W | $Lw_A$ dB(A) | $L_{10}$ (40 °C) | $L_{10}$ ($T_{max}$) | $L_{10IPC}$ (40 °C) |
|---|---|---|---|---|---|---|---|
| ① | ❶ | 4096 | 7.5 | 46 | 92 500 | 47 500 | 155 000 |
| ① | ❷ | 4100 | 7.5 | 46 | 90 000 | 45 000 | 152 500 |
| ① | ❸ | 4120 | 7.3 | 46 | 90 000 | 45 000 | 152 500 |
| ② | ❶ | 6622 | 25.1 | 64 | 87 500 | 42 500 | 147 500 |
| ② | ❷ | 6604 | 25.2 | 64 | 85 000 | 42 500 | 142 500 |
| ② | ❸ | 6620 | 25.2 | 59 | 80 000 | 40 000 | 135 000 |
| ② | ❹ | 6651 | 25 | 59 | 80 000 | 40 000 | 135 000 |

| | | n rpm⁻¹ | $P_{ed}$ W | $Lw_A$ dB(A) | $L_{10}$ (40 °C) | $L_{10}$ ($T_{max}$) | $L_{10IPC}$ (40 °C) |
|---|---|---|---|---|---|---|---|
| ③ | ❶ | 7562 | 37.5 | 64 | 82 500 | 40 000 | 140 000 |
| ③ | ❷ | 7585 | 37.3 | 64 | 77 500 | 37 500 | 130 000 |
| ③ | ❸ | 7649 | 36.9 | 64 | 72 500 | 37 500 | 122 500 |

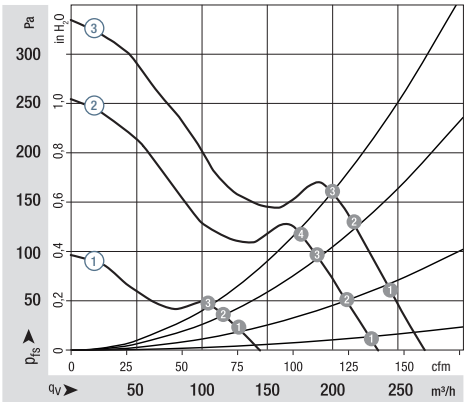


Air performance measured according to: ISO 5801.
Installation category A, without contact protection.
Noise: Total sound power level $L_{WA}$ ISO 10302 measured on a hemisphere with a radius of 2 m.
Sound pressure level $L_pA$ measured at 1 m distance from fan axis.
The values given are applicable only under the specified measuring conditions and may differ depending on the installation conditions.
In the event of deviation from the standard configuration, the parametersmust be checked after installation!
For detailed information see
http://www.ebmpapst.com/general conditions

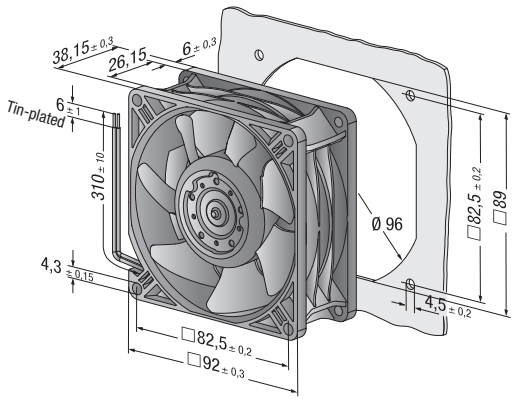




ebmpapst

Max. 170 m³/h

# DC axial fans

☐ 119 x 25 mm



- **Material:** Housing: GRP[1] (PBT)
  Impeller: GRP[1] (PA)
- **Direction of air flow:** Exhaust over struts
- **Direction of rotation:** Counterclockwise, looking towards rotor
- **Connection:** Via single wires AWG 24, TR 64
- **Highlights:** Ball bearings and sleeve bearings available
- **Weight:** 175 g

- **Possible special versions:**
  (See chapter DC fans - specials)
  - Speed signal
  - Go / NoGo alarm
  - Alarm with speed limit
  - External temperature sensor
  - Internal temperature sensor
  - PWM control input
  - Analog control input
  - Moisture protection

1) Fiberglass-reinforced plastic

Series 4400 F
VWC0119FUGAS

**Nominal data**

| Type | Air flow m³/h | Air flow cfm | Nominal voltage VDC | Voltage range VDC | Sound pressure level dB(A) | Sound power level Bel(A) | Sintec sleeve bearings □ / Ball bearings ■ | Power consumption Watts | Nominal speed rpm⁻¹ | Temperature range °C | Service life $L_{10}$ (40 °C) ebm-papst standard Hours | Service life $L_{10}$ ($T_{max}$) ebm-papst standard Hours | Life expectancy $L_{10IPC}$ (40 °C) see page 15 Hours | Curve |
|---|---|---|---|---|---|---|---|---|---|---|---|---|---|---|
| 4412 FGL | 94 | 55 | **12** | 7...14 | 26 | 3.9 | □ | 1.2 | 1 600 | -20...+75 | 80 000 / 32 500 | | 135 000 | ① |
| 4412 FGML | 114 | 67 | **12** | 7...12.6 | 32 | 4.3 | □ | 2.0 | 1 950 | -20...+75 | 75 000 / 30 000 | | 127 500 | ② |
| 4412 FML | 114 | 67 | **12** | 7...12.6 | 32 | 4.3 | ■ | 2.0 | 1 950 | -20...+75 | 75 000 / 30 000 | | 127 500 | ② |
| 4412 FGM | 140 | 82 | **12** | 7...12.6 | 38 | 4.8 | □ | 3.2 | 2 400 | -20...+75 | 70 000 / 27 500 | | 117 500 | ③ |
| 4412 FM | 140 | 82 | **12** | 7...12.6 | 38 | 4.8 | ■ | 3.2 | 2 400 | -20...+75 | 70 000 / 27 500 | | 117 500 | ③ |
| 4412 FG | 170 | 100 | **12** | 8...12.6 | 43 | 5.3 | □ | 5.3 | 2 900 | -20...+60 | 60 000 / 37 500 | | 102 500 | ④ |
| 4412 F | 168 | 99 | **12** | 8...12.6 | 43 | 5.3 | ■ | 5.3 | 2 900 | -20...+60 | 60 000 / 37 500 | | 102 500 | ④ |
| 4414 FL | 94 | 55 | **24** | 18...28 | 26 | 3.9 | ■ | 1.2 | 1 600 | -20...+75 | 80 000 / 32 500 | | 135 000 | ① |
| 4414 FM | 140 | 82 | **24** | 12...28 | 38 | 4.8 | ■ | 3.1 | 2 400 | -20...+75 | 70 000 / 27 500 | | 117 500 | ③ |
| 4414 FG | 170 | 100 | **24** | 12...28 | 43 | 5.3 | □ | 5.0 | 2 900 | -20...+60 | 60 000 / 37 500 | | 102 500 | ④ |
| 4414 F | 168 | 99 | **24** | 12...28 | 43 | 5.3 | ■ | 5.0 | 2 900 | -20...+60 | 60 000 / 37 500 | | 102 500 | ④ |
| 4418 FG | 170 | 100 | **48** | 28...53 | 43 | 5.3 | □ | 5.4 | 2 900 | -20...+60 | 60 000 / 37 500 | | 102 500 | ④ |
| 4418 F | 168 | 99 | **48** | 28...53 | 43 | 5.3 | ■ | 5.4 | 2 900 | -20...+60 | 60 000 / 37 500 | | 102 500 | ④ |

Subject to change

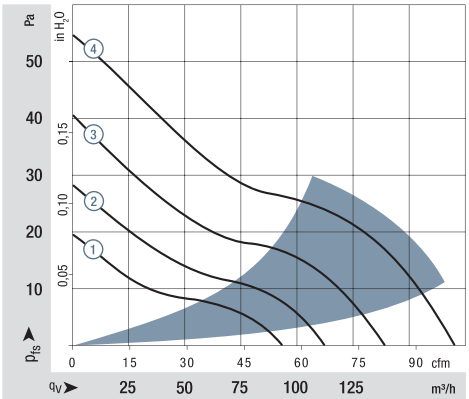


Air performance measured according to: ISO 5801.
Installation category A, without contact protection.
Noise: Total sound power level $L_{WA}$ ISO 10302 measured on a hemisphere with a radius of 2 m.
Sound pressure level $L_{pA}$ measured at 1 m distance from fan axis.
The values given are applicable only under the specified measuring conditions and may differ depending on the installation conditions.
In the event of deviation from the standard configuration, the parameters must be checked after installation!
For detailed information see
http://www.ebmpapst.com/general conditions

Available as an option:
Fan housing with molded-in spacers

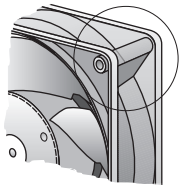

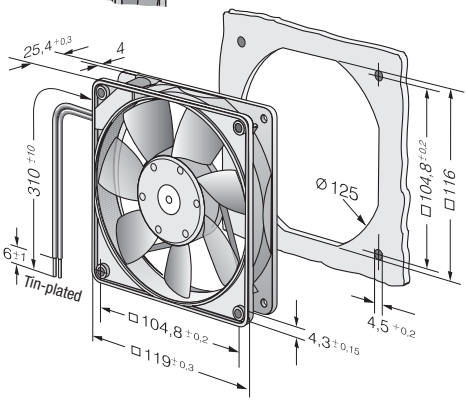

Max. 170 m³/h

# DC axial fans

## Ø 127 mm



- **Material:** Housing: GRP[1] (PBT)
  Impeller: GRP[1] (PA)
- **Direction of air flow:** Exhaust over struts
- **Direction of rotation:** Counterclockwise, looking towards rotor
- **Connection:** Via single wires AWG 24, TR 64
- **Highlights:** Ball bearings and sleeve bearings available
  Optional:
  - Reversible direction of rotation
  - Symmetrical impeller
- **Weight:** 170 g

1) Fiberglass-reinforced plastic

- **Possible special versions:**
  (See chapter DC fans - specials)
  - Speed signal
  - Go / NoGo alarm
  - External temperature sensor
  - Internal temperature sensor
  - PWM control input
  - Analog control input
  - Moisture protection
  - Reversible direction of rotation
  - Symmetrical impeller

Series 4400 F
round
VWS0113FUGAS

**Nominal data**

| Type | Air flow m³/h | Air flow cfm | Nominal voltage VDC | Voltage range VDC | Sound pressure level dB(A) | Sound power level Bel(A) | Sintec sleeve bearings / Ball bearings □/■ | Power consumption Watts | Nominal speed rpm⁻¹ | Temperature range °C | Service life $L_{10}$ (40 °C) ebm-papst standard Hours | Service life $L_{10}$ ($T_{max}$) ebm-papst standard Hours | Life expectancy $L_{10IPC}$ (40 °C) see page 15 Hours | Curve |
|---|---|---|---|---|---|---|---|---|---|---|---|---|---|---|
| 4412 FGL-573 | 91 | 54 | **12** | 7...15 | 26 | 3.9 | □ | 1.2 | 1 600 | -20...+75 | 80 000 | 32 500 | 135 000 | ① |
| 4412 FGMPR-197 | 140 | 82 | **12** | 7...12.6 | 38 | 4.8 | □ | 3.2 | 2 400 | -20...+65 | 75 000 | 27 500 | 117 500 | ② |
| 4412 FGPR-194 | 170 | 100 | **12** | 8...12.6 | 43 | 5.3 | □ | 5.3 | 2 900 | -20...+50 | 60 000 | 37 500 | 102 500 | ③ |

Subject to change

Other voltage versions (24 VDC, 48 VDC), speed variations and ball bearing designs are available as additional variants.

| | | n rpm⁻¹ | $P_{ed}$ W | $Lw_A$ dB(A) |
|---|---|---|---|---|
| ① | ❶ | 1515 | 1 | 44 |
| ① | ❷ | 1516 | 1 | 38 |
| ① | ❸ | 1547 | 1 | 40 |
| ① | ❹ | 1567 | 1 | 39 |

| | | n rpm⁻¹ | $P_{ed}$ W | $Lw_A$ dB(A) |
|---|---|---|---|---|
| ② | ❶ | 2225 | 4 | 51 |
| ② | ❷ | 2235 | 4 | 50 |
| ② | ❸ | 2304 | 4 | 51 |
| ② | ❹ | 2369 | 4 | 52 |

| | | n rpm⁻¹ | $P_{ed}$ W | $Lw_A$ dB(A) |
|---|---|---|---|---|
| ③ | ❶ | 2670 | 6 | 59 |
| ③ | ❷ | 2685 | 6 | 59 |
| ③ | ❸ | 2783 | 6 | 56 |
| ③ | ❹ | 2869 | 6 | 57 |

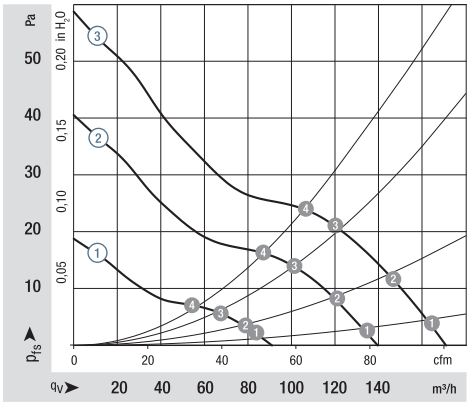


Air performance measured according to: ISO 5801.
Installation category A, without contact protection.
Noise: Total sound power level $L_{WA}$ ISO 10302 measured on a hemisphere with a radius of 2 m.
Sound pressure level $L_pA$ measured at 1 m distance from fan axis.
The values given are applicable only under the specified measuring conditions and may differ depending on the installation conditions.
In the event of deviation from the standard configuration, the parametersmust be checked after installation!
For detailed information see
http://www.ebmpapst.com/general conditions

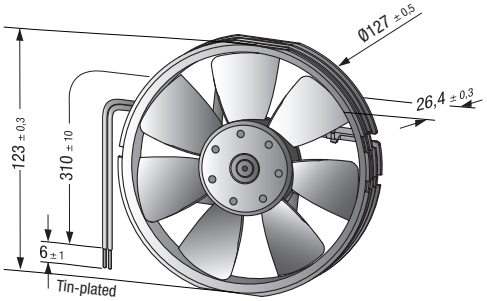




Finger guards
from p. 254

ebmpapst

Max. 225 m³/h

# DC axial fans

☐ 119 x 25 mm



- **Material:** Housing: GRP[1] (PBT)
  Impeller: GRP[1] (PA)
- **Direction of air flow:** Exhaust over struts
- **Direction of rotation:** Counterclockwise, looking towards rotor
- **Connection:** Via single wires AWG 22, TR 64
- **Weight:** 240 g

- **Possible special versions:**
  (See chapter DC fans - specials)
  - Speed signal
  - Go / NoGo alarm
  - Alarm with speed limit
  - External temperature sensor
  - Internal temperature sensor
  - PWM control input
  - Analog control input
  - Moisture protection

1) Fiberglass-reinforced plastic

| Series 4400 FN<br>VWC119FUJBS<br>**Nominal data** | Air flow | Air flow | **Nominal voltage** | Voltage range | Sound pressure level | Sound power level | Sintec sleeve bearings<br>Ball bearings | Power consumption | Nominal speed | Temperature range | Service life $L_{10}$ (40 °C)<br>ebm-papst standard<br>Service life $L_{10}$ ($T_{max}$)<br>ebm-papst standard | Life expectancy $L_{10IPC}$<br>(40 °C) see page 15 | Curve |
|---|---|---|---|---|---|---|---|---|---|---|---|---|---|
| **Type** | **m³/h** | **cfm** | **VDC** | **VDC** | **dB(A)** | **Bel(A)** | **□ / ■** | **Watts** | **rpm⁻¹** | **°C** | **Hours** | **Hours** | |
| 4412 FNH | 225 | 132 | **12** | 9...13.2 | 55 | 6.7 | ■ | 12 | 5 400 | -20...+70 | 60 000 / 30 000 | 102 500 | ② |
| 4414 FNN | 200 | 118 | **24** | 14...28 | 52 | 6.5 | ■ | 8.3 | 4 850 | -20...+70 | 60 000 / 30 000 | 102 500 | ① |
| 4414 FNH | 225 | 132 | **24** | 18...26.4 | 55 | 6.7 | ■ | 12 | 5 400 | -20...+70 | 60 000 / 30 000 | 102 500 | ② |
| 4418 FNH | 225 | 132 | **48** | 36...53 | 55 | 6.7 | ■ | 12 | 5 400 | -20...+70 | 60 000 / 30 000 | 102 500 | ② |

Subject to change

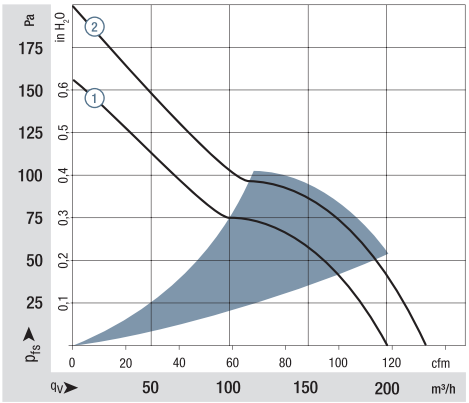


Air performance measured according to: ISO 5801.
Installation category A, without contact protection.
Noise: Total sound power level $L_{WA}$ ISO 10302 measured on a hemisphere with a radius of 2 m.
Sound pressure level $L_{pA}$ measured at 1 m distance from fan axis.
The values given are applicable only under the specified measuring conditions and may differ depending on the installation conditions.
In the event of deviation from the standard configuration, the parameters must be checked after installation!
For detailed information see
http://www.ebmpapst.com/general conditions

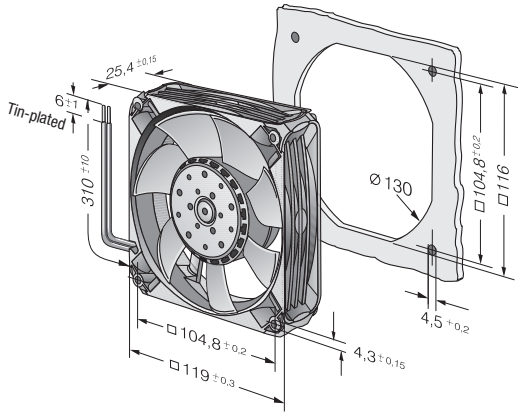

Max. 190 m³/h

**S-Panther**

# DC axial fans

☐ 119 x 32 mm



- **Material:** Housing: GRP[1] (PBT)
  Impeller: GRP[1] (PA)
- **Direction of air flow:** Exhaust over struts
- **Direction of rotation:** Clockwise, looking towards rotor
- **Connection:** Via single wires AWG 24, TR 64
- **Highlights:** Ball bearings and sleeve bearings available
- **Weight:** 250 g

- **Possible special versions:**
  (See chapter DC fans - specials)
  - Speed signal
  - Go / NoGo alarm
  - Alarm with speed limit
  - External temperature sensor
  - Internal temperature sensor
  - PWM control input
  - Analog control input
  - Moisture protection
  - Salt spray protection
  - Degree of protection: IP 54 / IP 68

1) Fiberglass-reinforced plastic

Series 4300 N
VWC0119PUGBS

| Nominal data | Air flow | Air flow | Nominal voltage | Voltage range | Sound pressure level | Sound power level | Sintec sleeve bearings / Ball bearings | Power consumption | Nominal speed | Temperature range | Service life $L_{10}$ (40 °C) ebm-papst standard / Service life $L_{10}$ ($T_{max}$) ebm-papst standard | Life expectancy $L_{10IPC}$ (40 °C) see page 15 | Curve |
|---|---|---|---|---|---|---|---|---|---|---|---|---|---|
| **Type** | **m³/h** | **cfm** | **VDC** | **VDC** | **dB(A)** | **Bel(A)** | □ / ■ | **Watts** | **rpm⁻¹** | **°C** | **Hours** | **Hours** | |
| 4312 NL | 100 | 59 | **12** | 6...15 | 25 | 3.9 | ■ | 0.9 | 1 450 | -20...+75 | 95 000 / 37 500 | 160 000 | ① |
| 4312 NM | 150 | 88 | **12** | 6...15 | 36 | 4.7 | ■ | 2.2 | 2 100 | -20...+75 | 85 000 / 32 500 | 142 000 | ② |
| 4312 NN | 190 | 112 | **12** | 6...15 | 43 | 5.4 | ■ | 4.3 | 2 700 | -20...+75 | 72 500 / 30 000 | 122 000 | ③ |
| 4314 NL | 100 | 59 | **24** | 12...28 | 25 | 3.9 | ■ | 1.0 | 1 450 | -20...+75 | 95 000 / 37 500 | 160 000 | ① |
| 4314 NM | 150 | 88 | **24** | 12...28 | 36 | 4.7 | ■ | 2.4 | 2 100 | -20...+75 | 85 000 / 32 500 | 142 000 | ② |
| 4314 NN | 190 | 112 | **24** | 12...28 | 43 | 5.4 | ■ | 4.1 | 2 700 | -20...+75 | 72 500 / 30 000 | 122 000 | ③ |
| 4318 NN | 190 | 112 | **48** | 36...60 | 43 | 5.4 | ■ | 4.3 | 2 700 | -20...+75 | 72 500 / 30 000 | 122 000 | ③ |

Subject to change

| | | n rpm⁻¹ | $P_{ed}$ W | $Lw_A$ dB(A) | $L_{10}$ (40 °C) | $L_{10}$ ($T_{max}$) | $L_{10IPC}$ (40 °C) |
|---|---|---|---|---|---|---|---|
| ① | ❶ | 1 410 | 0.9 | 41 | 95 000 | 37 500 | 160 000 |
| ① | ❷ | 1 400 | 0.9 | 40 | 92 500 | 37 500 | 155 000 |
| ① | ❸ | 1 430 | 0.9 | 39 | 92 500 | 37 500 | 155 000 |
| ① | ❹ | 1 440 | 0.9 | 44 | 90 000 | 35 000 | 152 500 |
| ② | ❶ | 2 150 | 2.2 | 49 | 85 000 | 32 500 | 142 000 |
| ② | ❷ | 2 140 | 2.3 | 48 | 82 500 | 32 500 | 140 000 |
| ② | ❸ | 2 110 | 2.3 | 47 | 82 500 | 32 500 | 140 000 |
| ② | ❹ | 2 140 | 2.3 | 54 | 80 000 | 32 500 | 135 000 |

| | | n rpm⁻¹ | $P_{ed}$ W | $Lw_A$ dB(A) | $L_{10}$ (40 °C) | $L_{10}$ ($T_{max}$) | $L_{10IPC}$ (40 °C) |
|---|---|---|---|---|---|---|---|
| ③ | ❶ | 2 660 | 4.2 | 55 | 72 500 | 30 000 | 122 000 |
| ③ | ❷ | 2 660 | 4.3 | 55 | 70 000 | 27 500 | 117 500 |
| ③ | ❸ | 2 600 | 4.4 | 54 | 70 000 | 27 500 | 117 500 |
| ③ | ❹ | 2 620 | 4.4 | 54 | 65 000 | 25 000 | 110 000 |

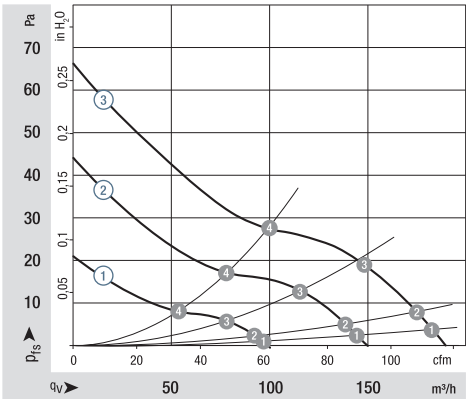


Air performance measured according to: ISO 5801.
Installation category A, without contact protection.
Noise: Total sound power level $L_{WA}$ ISO 10302 measured on a hemisphere with a radius of 2 m.
Sound pressure level $L_pA$ measured at 1 m distance from fan axis.
The values given are applicable only under the specified measuring conditions and may differ depending on the installation conditions.
In the event of deviation from the standard configuration, the parameters must be checked after installation!
For detailed information see
http://www.ebmpapst.com/general conditions

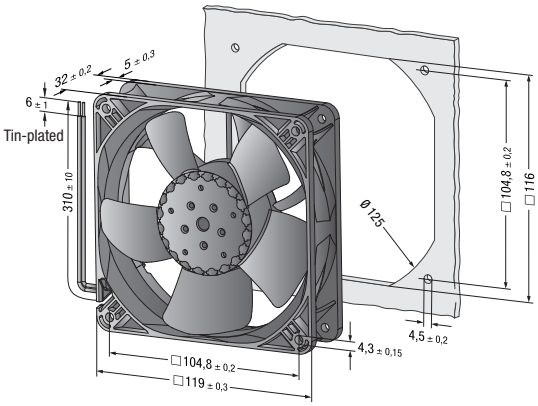




**Finger guards from p. 254**

ebmpapst

Max. 285 m³/h

# S-Panther

## DC axial fans

☐ 119 x 32 mm



- **Material:** Housing: GRP[1] (PBT)
  Impeller: GRP[1] (PA)
- **Direction of air flow:** Exhaust over struts
- **Direction of rotation:** Clockwise, looking towards rotor
- **Connection:** Via single wires AWG 24, TR 64
- **Highlights:** Ball bearings and sleeve bearings available
- **Weight:** 250 g

- **Possible special versions:**
  (See chapter DC fans - specials)
  - Speed signal
  - Go / NoGo alarm
  - Alarm with speed limit
  - External temperature sensor
  - Internal temperature sensor
  - PWM control input
  - Analog control input
  - Moisture protection
  - Salt spray protection
  - Degree of protection: IP 54 / IP 68

1) Fiberglass-reinforced plastic

Series 4300 N
VWC0119PUGBS

**Nominal data**

| Type | Air flow m³/h | Air flow cfm | Nominal voltage VDC | Voltage range VDC | Sound pressure level dB(A) | Sound power level Bel(A) | Sintec sleeve bearings / Ball bearings □/■ | Power consumption Watts | Nominal speed rpm⁻¹ | Temperature range °C | Service life $L_{10}$ (40 °C) ebm-papst standard / Service life $L_{10}$ ($T_{max}$) ebm-papst standard Hours | Life expectancy $L_{10IPC}$ (40 °C) see page 15 Hours | Curve |
|---|---|---|---|---|---|---|---|---|---|---|---|---|---|
| 4312 NH | 220 | 129 | 12 | 6…15 | 47 | 5.8 | ■ | 7.6 | 3 150 | -20…+75 | 62 500 / 25 000 | 105 000 | ① |
| 4312 NHH | 250 | 147 | 12 | 6…14.4 | 51 | 6.2 | ■ | 10.7 | 3 600 | -20…+65 | 52 500 / 30 000 | 87 500 | ② |
| 4312 NH3 | 285 | 168 | 12 | 7…13.2 | 55 | 6.6 | ■ | 12.0 | 4 050 | -20…+70 | 45 000 / 17 500 | 75 000 | ③ |
| 4314 NH | 220 | 129 | 24 | 12...28 | 47 | 5.8 | ■ | 6.7 | 3 150 | -20…+75 | 62 500 / 25 000 | 105 000 | ① |
| 4314 NHH | 250 | 147 | 24 | 12...27 | 51 | 6.2 | ■ | 9.8 | 3 600 | -20…+70 | 52 500 / 27 500 | 87 500 | ② |
| 4314 NH3 | 285 | 168 | 24 | 14...26.4 | 55 | 6.6 | ■ | 11.0 | 4 050 | -20…+70 | 45 000 / 17 500 | 75 000 | ③ |
| 4318 NH | 220 | 129 | 48 | 36...60 | 47 | 5.8 | ■ | 6.7 | 3 150 | -20…+75 | 62 500 / 25 000 | 105 000 | ① |
| 4318 NH3 | 285 | 168 | 48 | 36...52.8 | 55 | 6.6 | ■ | 11.5 | 4 050 | -20…+65 | 45 000 / 17 500 | 75 000 | ③ |

Subject to change

| | | n rpm⁻¹ | $P_{ed}$ W | $Lw_A$ dB(A) | $L_{10}$ (40 °C) | $L_{10}$ ($T_{max}$) | $L_{10IPC}$ (40 °C) |
|---|---|---|---|---|---|---|---|
| ① | ❶ | 3 180 | 6.8 | 60 | 60 000 | 25 000 | 102 500 |
| ① | ❷ | 3 150 | 6.9 | 60 | 57 500 | 22 500 | 97 500 |
| ① | ❸ | 3 100 | 7.0 | 58 | 57 500 | 22 500 | 97 500 |
| ① | ❹ | 3 140 | 6.9 | 64 | 57 500 | 22 500 | 97 500 |
| ② | ❶ | 3 600 | 10 | 65 | 50 000 | 25 000 | 85 000 |
| ② | ❷ | 3 540 | 10 | 63 | 47 500 | 25 000 | 80 000 |
| ② | ❸ | 3 480 | 10 | 62 | 45 000 | 22 500 | 75 000 |
| ② | ❹ | 3 500 | 10 | 63 | 50 000 | 25 000 | 85 000 |

| | | n rpm⁻¹ | $P_{ed}$ W | $Lw_A$ dB(A) | $L_{10}$ (40 °C) | $L_{10}$ ($T_{max}$) | $L_{10IPC}$ (40 °C) |
|---|---|---|---|---|---|---|---|
| ③ | ❶ | 4 070 | 12 | 67 | 42 500 | 17 500 | 72 500 |
| ③ | ❷ | 4 030 | 12 | 66 | 37 500 | 15 000 | 62 500 |
| ③ | ❸ | 3 960 | 12 | 66 | 37 500 | 15 000 | 62 500 |
| ③ | ❹ | 4 020 | 12 | 70 | 45 000 | 17 500 | 75 000 |

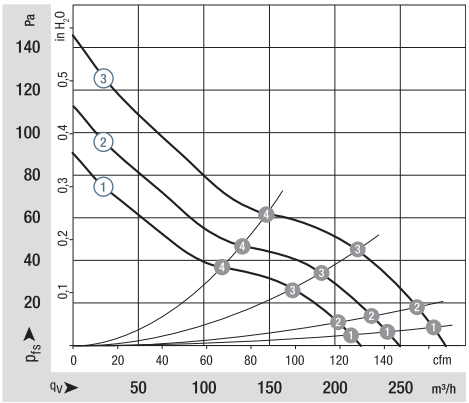


Air performance measured according to: ISO 5801.
Installation category A, without contact protection.
Noise: Total sound power level $L_{WA}$ ISO 10302 measured on a hemisphere with a radius of 2 m.
Sound pressure level $L_pA$ measured at 1 m distance from fan axis.
The values given are applicable only under the specified measuring conditions and may differ depending on the installation conditions.
In the event of deviation from the standard configuration, the parameters must be checked after installation!
For detailed information see
http://www.ebmpapst.com/general conditions

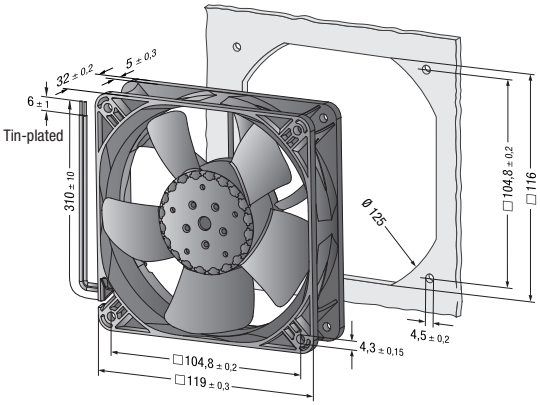



Information
DC axial fans
DC centrifugal fans
DC fans - specials
ACmaxx / EC axial fans
AC axial fans
AC centrifugal fans
Accessories
Representatives

Max. 205 m³/h

# DC axial fans

☐ 119 x 38 mm



- **Material:** Housing: GRP[1] (PBT)
  Impeller: GRP[1] (PA)
- **Direction of air flow:** Exhaust over struts
- **Direction of rotation:** Clockwise, looking towards rotor
- **Connection:** Via single wires AWG 24, TR 64
- **Weight:** 270 g

- **Possible special versions:**
  (See chapter DC fans - specials)
  - Speed signal
  - Go / NoGo alarm
  - Alarm with speed limit
  - External temperature sensor
  - Internal temperature sensor
  - PWM control input
  - Analog control input
  - Moisture protection
  - Degree of protection: IP 54

1) Fiberglass-reinforced plastic

| Series 4400<br>VWC0119AUGBS<br>**Nominal data** | Air flow | Air flow | **Nominal voltage** | Voltage range | Sound pressure level | Sound power level | Sintec sleeve bearings<br>Ball bearings | Power consumption | Nominal speed | Temperature range | Service life $L_{10}$ (40 °C) ebm-papst standard<br>Service life $L_{10}$ ($T_{max}$) ebm-papst standard | Life expectancy $L_{10IPC}$ (40 °C) see page 15 | Curve |
|---|---|---|---|---|---|---|---|---|---|---|---|---|---|
| **Type** | **m³/h** | **cfm** | **VDC** | **VDC** | **dB(A)** | **Bel(A)** | **□ / ■** | **Watts** | **rpm⁻¹** | **°C** | **Hours** | **Hours** | |
| 4412 L | 150 | 88 | **12** | 7...14 | 37 | 5.0 | ■ | 2.2 | 2 700 | -20...+80 | 67 500 / 22 500 | 115 000 | ③ |
| 4412 ML | 168 | 99 | **12** | 7...15 | 40 | 5.1 | ■ | 3.0 | 3 000 | -20...+80 | 67 500 / 22 500 | 115 000 | ④ |
| 4412 M | 184 | 108 | **12** | 7...14 | 42 | 5.3 | ■ | 3.8 | 3 300 | -20...+75 | 65 000 / 25 000 | 110 000 | ⑤ |
| 4412 N | 205 | 121 | **12** | 7...14 | 46 | 5.6 | ■ | 5.3 | 3 650 | -20...+70 | 62 500 / 30 000 | 105 000 | ⑥ |
| 4414 L3 | 100 | 59 | **24** | 12...28 | 26 | 4.0 | ■ | 1.0 | 1 800 | -20...+80 | 75 500 / 22 500 | 127 500 | ① |
| 4414 LL | 124 | 73 | **24** | 12...28 | 33 | 4.5 | ■ | 1.6 | 2 250 | -20...+80 | 70 000 / 22 500 | 117 500 | ② |
| 4414 L | 150 | 88 | **24** | 18...28 | 37 | 5.0 | ■ | 2.4 | 2 700 | -20...+80 | 67 500 / 22 500 | 115 000 | ③ |
| 4414 ML | 168 | 99 | **24** | 12...28 | 40 | 5.1 | ■ | 3.2 | 3 000 | -20...+80 | 67 500 / 22 500 | 115 000 | ④ |
| 4414 M | 184 | 108 | **24** | 18...28 | 42 | 5.3 | ■ | 4.1 | 3 300 | -20...+75 | 65 000 / 25 000 | 110 000 | ⑤ |
| 4414 N | 205 | 121 | **24** | 18...28 | 46 | 5.6 | ■ | 5.4 | 3 650 | -20...+70 | 62 500 / 30 000 | 105 000 | ⑥ |
| 4418 L | 150 | 88 | **48** | 36...60 | 37 | 5.0 | ■ | 2.5 | 2 700 | -20...+75 | 67 500 / 27 500 | 115 000 | ③ |
| 4418 ML | 168 | 99 | **48** | 36...60 | 40 | 5.1 | ■ | 3.2 | 3 000 | -20...+75 | 67 500 / 27 500 | 115 000 | ④ |
| 4418 M | 184 | 108 | **48** | 36...60 | 42 | 5.3 | ■ | 4.2 | 3 300 | -20...+70 | 65 000 / 32 500 | 110 000 | ⑤ |
| 4418 N | 205 | 121 | **48** | 36...60 | 46 | 5.6 | ■ | 5.4 | 3 650 | -20...+70 | 62 500 / 30 000 | 105 000 | ⑥ |

Subject to change

Further variants can be found on page 57.

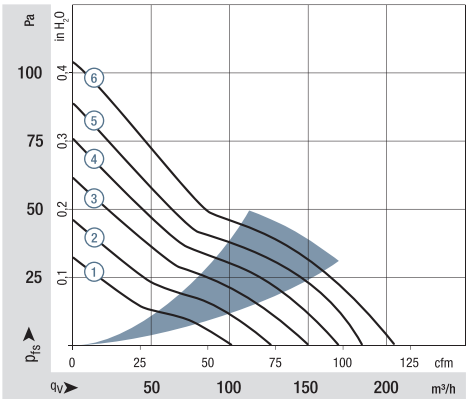


Air performance measured according to: ISO 5801.
Installation category A, without contact protection.
Noise: Total sound power level $L_{WA}$ ISO 10302 measured on a hemisphere with a radius of 2 m.
Sound pressure level $L_{pA}$ measured at 1 m distance from fan axis.
The values given are applicable only under the specified measuring conditions and may differ depending on the installation conditions.
In the event of deviation from the standard configuration, the parameters must be checked after installation!
For detailed information see
http://www.ebmpapst.com/general conditions

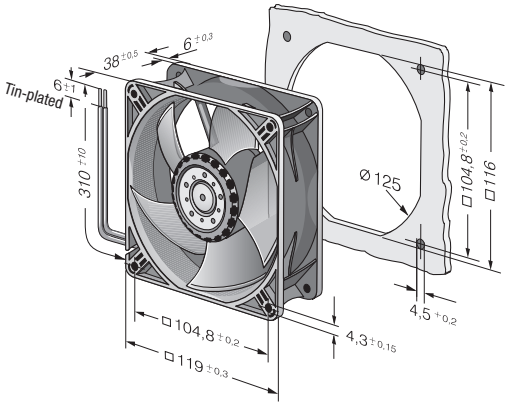




ebmpapst

Max. 285 m³/h

# DC axial fans

☐ 119 x 38 mm



- **Material:** Housing: GRP[1] (PBT)
  Impeller: GRP[1] (PA)
- **Direction of air flow:** Exhaust over struts
- **Direction of rotation:** Clockwise, looking towards rotor
- **Connection:** Via single wires AWG 24, TR 64
- **Weight:** 270 g

- **Possible special versions:**
  (See chapter DC fans - specials)
  - Speed signal
  - Go / NoGo alarm
  - Alarm with speed limit
  - External temperature sensor
  - Internal temperature sensor
  - PWM control input
  - Analog control input
  - Moisture protection
  - Degree of protection: IP 54

1) Fiberglass-reinforced plastic

Series 4400
VWC0119AUGBS

| Nominal data | Air flow | Air flow | Nominal voltage | Voltage range | Sound pressure level | Sound power level | Sintec sleeve bearings ☐ / Ball bearings ■ | Power consumption | Nominal speed | Temperature range | Service life $L_{10}$ (40 °C) ebm-papst standard / Service life $L_{10}$ ($T_{max}$) ebm-papst standard | Life expectancy $L_{10IPC}$ (40 °C) see page 15 | Curve |
|---|---|---|---|---|---|---|---|---|---|---|---|---|---|
| **Type** | **m³/h** | **cfm** | **VDC** | **VDC** | **dB(A)** | **Bel(A)** | ☐ / ■ | **Watts** | **rpm⁻¹** | **°C** | **Hours** | **Hours** | |
| 4412 H | 240 | 141 | **12** | 7...14 | 50 | 6.0 | ■ | 8.6 | 4 300 | -20...+70 | 57 500 / 27 500 | 97 500 | ① |
| 4412/2 HHP | 285 | 168 | **12** | 7...14.5 | 55 | 6.4 | ■ | 13.0 | 5 000 | -20...+70 | 50 000 / 25 000 | 85 000 | ② |
| 4414 H | 240 | 141 | **24** | 18...28 | 50 | 6.0 | ■ | 8.6 | 4 300 | -20...+70 | 57 500 / 27 500 | 97 500 | ① |
| 4414 HH | 285 | 165 | **24** | 16...28 | 55 | 6.4 | ■ | 14.0 | 5 000 | -20...+70 | 50 000 / 25 000 | 85 000 | ② |
| 4414/2 HHP | 285 | 168 | **24** | 18...28 | 55 | 6.4 | ■ | 12.0 | 5 000 | -20...+70 | 50 000 / 25 000 | 85 000 | ② |
| 4418 H | 240 | 141 | **48** | 36...60 | 50 | 6.0 | ■ | 8.6 | 4 300 | -20...+70 | 57 500 / 27 500 | 97 500 | ① |
| 4418/2 HHP | 285 | 168 | **48** | 36...60 | 55 | 6.4 | ■ | 13.0 | 5 000 | -20...+70 | 50 000 / 25 000 | 85 000 | ② |

Subject to change

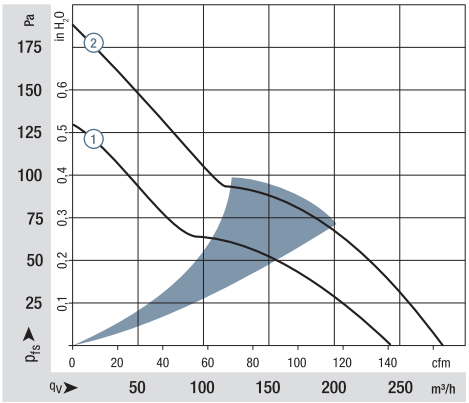


Air performance measured according to: ISO 5801.
Installation category A, without contact protection.
Noise: Total sound power level $L_{WA}$ ISO 10302 measured on a hemisphere with a radius of 2 m.
Sound pressure level $L_{pA}$ measured at 1 m distance from fan axis.
The values given are applicable only under the specified measuring conditions and may differ depending on the installation conditions.
In the event of deviation from the standard configuration, the parameters must be checked after installation!
For detailed information see
http://www.ebmpapst.com/general conditions

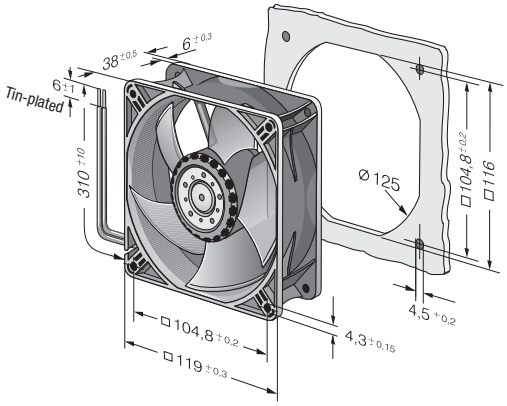

Max. 237 m³/h

# DC axial fans

☐ 119 x 38 mm



- **Material:** Housing: Die-cast aluminum
  Impeller: GRP[1] (PA)
- **Direction of air flow:** Intake over struts
- **Direction of rotation:** Clockwise, looking towards rotor
- **Connection:** On flat connectors, 2.8 x 0.5 mm
  Also available with wires as an option
- **Highlights:** Housing with grounding lug for screw M4 x 8 (Torx)
- **Weight:** 390 g

- **Possible special versions:**
  (See chapter DC fans - specials)
  - Speed signal
  - Go / NoGo alarm
  - Alarm with speed limit
  - External temperature sensor
  - Internal temperature sensor
  - PWM control input
  - Analog control input
  - Moisture protection
  - Salt spray protection
  - Degree of protection: IP 54 / IP 68

1) Fiberglass-reinforced plastic

Series 4100 N
VUC0119YUJBS

| Nominal data | Air flow | Air flow | Nominal voltage | Voltage range | Sound pressure level | Sound power level | Sintec sleeve bearings / Ball bearings | Power consumption | Nominal speed | Temperature range | Service life $L_{10}$ (40 °C) ebm-papst standard / Service life $L_{10}$ ($T_{max}$) ebm-papst standard | Life expectancy $L_{10IPC}$ (40 °C) see page 15 | Curve |
|---|---|---|---|---|---|---|---|---|---|---|---|---|---|
| **Type** | **m³/h** | **cfm** | **VDC** | **VDC** | **dB(A)** | **Bel(A)** | □ / ■ | **Watts** | **rpm⁻¹** | **°C** | **Hours** | **Hours** | |
| 4182 NGX | 160 | 94 | **12** | 6...15 | 44 | 5.3 | □ | 3.7 | 2 800 | -20...+75 | 85 000 / 37 500 | 142 500 | ① |
| 4182 NX | 180 | 106 | **12** | 6...15 | 49 | 5.7 | ■ | 4.9 | 3 200 | -30...+75 | 85 000 / 37 500 | 142 500 | ② |
| 4182 NXH | 237 | 140 | **12** | 7...14 | 57 | 6.5 | ■ | 11.0 | 4 400 | -30...+55 | 70 000 / 50 000 | 117 500 | ③ |
| 4184 NGX | 160 | 94 | **24** | 12...31.5 | 44 | 5.3 | □ | 3.3 | 2 800 | -20...+75 | 85 000 / 37 500 | 142 500 | ① |
| 4184 NXM | 160 | 94 | **24** | 12...31.5 | 44 | 5.3 | ■ | 3.2 | 2 800 | -30...+75 | 85 000 / 37 500 | 142 500 | ① |
| 4184 NX | 180 | 106 | **24** | 12...31.5 | 49 | 5.7 | ■ | 4.9 | 3 200 | -30...+70 | 85 000 / 42 500 | 142 500 | ② |
| 4184 NXH | 237 | 140 | **24** | 12...28 | 57 | 6.5 | ■ | 11.0 | 4 400 | -30...+70 | 70 000 / 35 000 | 117 500 | ③ |
| 4188 NGX | 160 | 94 | **48** | 36...60 | 44 | 5.3 | □ | 3.6 | 2 800 | -20...+75 | 85 000 / 37 500 | 142 500 | ① |
| 4188 NXM | 160 | 94 | **48** | 36...60 | 44 | 5.3 | ■ | 3.5 | 2 800 | -30...+75 | 85 000 / 37 500 | 142 500 | ① |

Subject to change

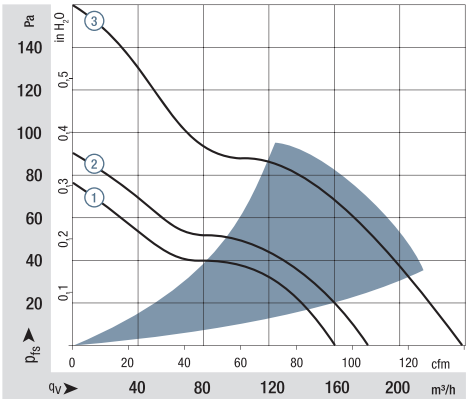


Air performance measured according to: ISO 5801.
Installation category A, without contact protection.
Noise: Total sound power level $L_{WA}$ ISO 10302 measured on a hemisphere with a radius of 2 m.
Sound pressure level $L_{pA}$ measured at 1 m distance from fan axis.
The values given are applicable only under the specified measuring conditions and may differ depending on the installation conditions.
In the event of deviation from the standard configuration, the parameters must be checked after installation!
For detailed information see
http://www.ebmpapst.com/general conditions

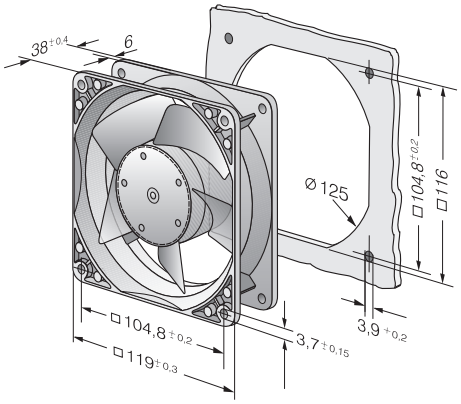

Max. 440 m³/h

# DC axial fans

☐ 119 x 38 mm



- **Material:** Housing: Die-cast aluminum
  Impeller: GRP[1)] (PA)
- **Direction of air flow:** Intake over struts
- **Direction of rotation:** Clockwise, looking towards rotor
- **Connection:** Via single wires AWG 22 UL 1007, TR 64
- **Highlights:** Housing with grounding lug for screw M4 x 8 (Torx)
- **Weight:** 390 g

- **Possible special versions:**
  (See chapter DC fans - specials)
  - Speed signal
  - Go / NoGo alarm
  - Alarm with speed limit
  - External temperature sensor
  - Internal temperature sensor
  - PWM control input
  - Analog control input
  - Moisture protection
  - Salt spray protection
  - Degree of protection:IP 54 / IP 68

1) Fiberglass-reinforced plastic

Series 4100 N
High Performance
VUC0119YUJBS

**Nominal data**

| Type | Air flow m³/h | Air flow cfm | Nominal voltage VDC | Voltage range VDC | Sound pressure level dB(A) | Sound power level Bel(A) | Sintec sleeve bearings ☐ / Ball bearings ■ | Power consumption* Watts | Nominal speed rpm⁻¹ | Temperature range °C | Service life $L_{10}$ (40 °C) ebm-papst standard Hours | Service life $L_{10}$ ($T_{max}$) ebm-papst standard Hours | Life expectancy $L_{10IPC}$ (40 °C) see page 15 Hours | Curve |
|---|---|---|---|---|---|---|---|---|---|---|---|---|---|---|
| 4112 NHH | 260 | 153 | **12** | 9...15 | 60 | 6.8 | ■ | 13.3 | 5 000 | -20...+65 | 70 000 / 40 000 | | 117 500 | ① |
| 4112 NH3 | 310 | 182 | **12** | 9...15 | 65 | 7.2 | ■ | 21.6 | 6 000 | -20...+65 | 65 000 / 37 500 | | 110 000 | ② |
| 4112 NH4 | 355 | 209 | **12** | 9...14 | 67 | 7.4 | ■ | 32.0 | 6 800 | -20...+65 | 62 500 / 35 000 | | 105 000 | ③ |
| 4114 NHH | 260 | 153 | **24** | 16...30 | 60 | 6.8 | ■ | 12.4 | 5 000 | -20...+65 | 70 000 / 40 000 | | 117 500 | ① |
| 4114 NH3 | 310 | 182 | **24** | 16...30 | 65 | 7.2 | ■ | 19.5 | 6 000 | -20...+65 | 65 000 / 37 500 | | 110 000 | ② |
| 4114 NH4 | 355 | 209 | **24** | 16...30 | 67 | 7.4 | ■ | 30.0 | 6 800 | -20...+65 | 62 500 / 35 000 | | 105 000 | ③ |
| 4114 NH5 *S-Force* | 390 | 230 | **24** | 16...30 | 70 | 7.6 | ■ | 45.0* | 7 500 | -20...+65 | 62 500 / 35 000 | | 105 000 | ④ |
| 4114 NH6 *S-Force* | 440 | 259 | **24** | 16...30 | 73 | 8.1 | ■ | 65.0* | 8 400 | -20...+65 | 60 000 / 32 500 | | 102 500 | ⑤ |
| 4118 NHH | 260 | 153 | **48** | 36...60 | 60 | 6.8 | ■ | 12.0 | 5 000 | -20...+65 | 70 000 / 40 000 | | 117 500 | ① |
| 4118 NH3 | 310 | 182 | **48** | 36...60 | 65 | 7.2 | ■ | 20.0 | 6 000 | -20...+65 | 65 000 / 37 500 | | 110 000 | ② |
| 4118 NH4 | 355 | 209 | **48** | 36...60 | 67 | 7.4 | ■ | 28.0 | 6 800 | -20...+65 | 62 500 / 35 000 | | 105 000 | ③ |
| 4118 NH5 *S-Force* | 390 | 230 | **48** | 36...60 | 70 | 7.6 | ■ | 45.0* | 7 500 | -20...+65 | 62 500 / 35 000 | | 105 000 | ④ |
| 4118 NH6 *S-Force* | 440 | 259 | **48** | 36...60 | 73 | 8.1 | ■ | 62.0* | 8 400 | -20...+65 | 60 000 / 32 500 | | 102 500 | ⑤ |

Subject to change

* Power consumption at free air flow. These values can be significantly higher in the operating point.

*** Power consumption – in operation**

| Fan type | optimum operating range (W) |
|---|---|
| 4114 NH5 | 55 |
| 4114 NH6 | 95 |
| 4118 NH5 | 55 |
| 4118 NH6 | 95 |

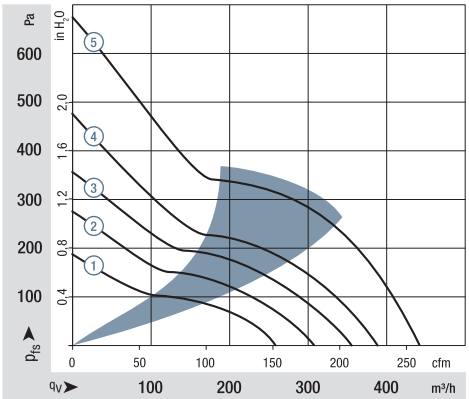


Air performance measured according to: ISO 5801.
Installation category A, without contact protection.
Noise: Total sound power level $L_{WA}$ ISO 10302 measured on a hemisphere with a radius of 2 m.
Sound pressure level $L_{pA}$ measured at 1 m distance from fan axis.
The values given are applicable only under the specified measuring conditions and may differ depending on the installation conditions.
In the event of deviation from the standard configuration, the parameters must be checked after installation!
For detailed information see
http://www.ebmpapst.com/general conditions

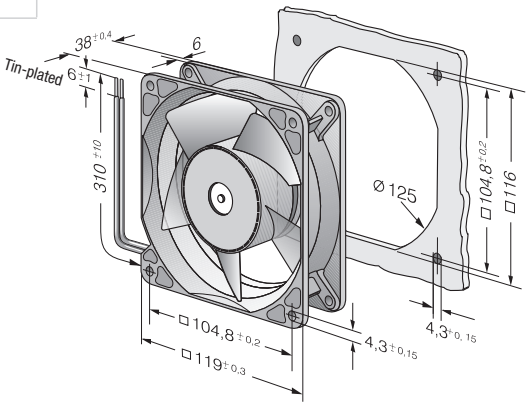

Max. 540 m³/h

S-Force

# DC axial fans

□ 119 x 38 mm



- **Material:** Housing: Die-cast aluminum
  Impeller: GRP[1] (PA)
- **Direction of air flow:** Intake over struts
- **Direction of rotation:** Clockwise, looking towards rotor
- **Connection:** Via single wires AWG 18, 20 or AWG 22, TR 64, speed signal and control input AWG 22
- **Highlights:** Highly efficient and smoothly operating 3-phase fan drive
  Housing with grounding lug for screw M4 x 8 (Torx)
- **Weight:** 425 g

1) Fiberglass-reinforced plastic

- **Possible special versions:**
  (See chapter DC fans - specials)
  - Speed signal
  - Go / NoGo alarm
  - Alarm with speed limit
  - External temperature sensor
  - Internal temperature sensor
  - PWM control input (standard)
  - Analog control input
  - Moisture protection

Series 4100 N
High Performance
VUC0119YUJCS

**Nominal data**

| Type | Air flow m³/h | Air flow cfm | Nominal voltage VDC | Voltage range VDC | Sound pressure level dB(A) | Sound power level Bel(A) | Sintec sleeve bearings / Ball bearings □/■ | Power consumption* Watts | Nominal speed rpm⁻¹ | Temperature range °C | Service life $L_{10}$ (40 °C) ebm-papst standard / Service life $L_{10}$ ($T_{max}$) ebm-papst standard Hours | Life expectancy $L_{10IPC}$ (40 °C) see page 15 Hours | Curve |
|---|---|---|---|---|---|---|---|---|---|---|---|---|---|
| 4154 N/2 H7P | 465 | 274 | **24** | 16...30 | 77 | 8.5 | ■ | 90 | 9 500 | -20...+75 | 57 500 / 25 000 | 97 500 | ① |
| 4154 N/2 H8P | 540 | 315 | **24** | 16...30 | 80 | 8.9 | ■ | 120 | 11 000 | -20...+75 | 55 000 / 22 500 | 92 500 | ② |
| 4158 N/2 H7P | 465 | 274 | **48** | 36...72 | 77 | 8.5 | ■ | 90 | 9 500 | -20...+75 | 57 500 / 25 000 | 97 500 | ① |
| 4158 N/2 H8P | 540 | 315 | **48** | 36...72 | 80 | 8.9 | ■ | 120 | 11 000 | -20...+75 | 55 000 / 22 500 | 92 500 | ② |

Subject to change

Speed control range from 500 rpm⁻¹ up to maximum nominal speed.
Standstill at 0 % PWM, maximum speed if control cable is interrupted.
To attain the specified service life, an external capacitor must be wired between the plus and minus strands. Please note the wiring suggestion on page 14.
* Power consumption at free air flow, these values can be significantly higher in the operating point.

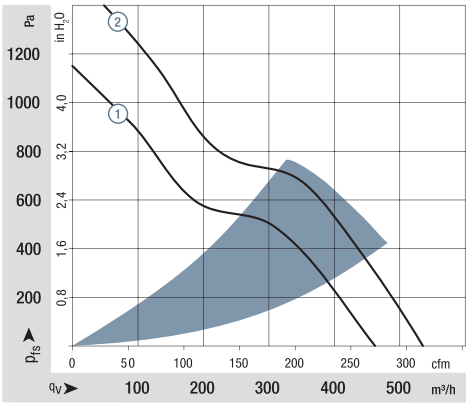


Air performance measured according to: ISO 5801.
Installation category A, without contact protection.
Noise: Total sound power level $L_{WA}$ ISO 10302 measured on a hemisphere with a radius of 2 m.
Sound pressure level $L_{pA}$ measured at 1 m distance from fan axis.
The values given are applicable only under the specified measuring conditions and may differ depending on the installation conditions.
In the event of deviation from the standard configuration, the parameters must be checked after installation!
For detailed information see
http://www.ebmpapst.com/general conditions

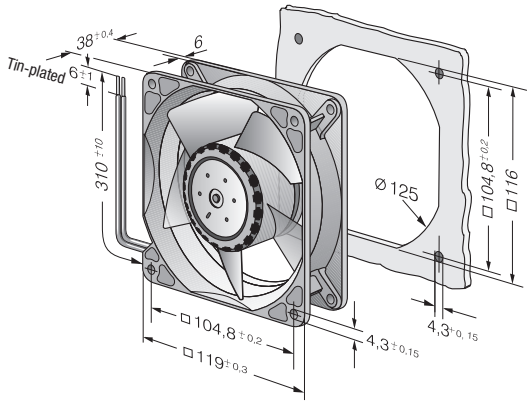




Finger guards from p. 254

ebmpapst

Max. 280 m³/h

# DC diagonal fan

☐ 119 x 38 mm



- **Material:** Housing: GRP[1] (PBT)
  Available in die-cast aluminum
  Impeller: GRP[1] (PA)
- **Direction of air flow:** Exhaust over struts
- **Direction of rotation:** Counterclockwise, looking towards rotor
- **Connection:** Via single wires AWG 22, TR 64
- **Highlights:** Housing with grounding lug for screw M4 x 8 (Torx)
- **Weight:** 375 g (with metal housing: 455 g)

- **Possible special versions:**
  (See chapter DC fans - specials)
  - Speed signal
  - Go / NoGo alarm
  - Alarm with speed limit
  - External temperature sensor
  - Internal temperature sensor
  - PWM control input
  - Analog control input
  - Moisture protection
  - Salt spray protection
  - Degree of protection: IP 54 / IP 68

1) Fiberglass-reinforced plastic

Series DV 4100
VKC0119AUJBS

**Nominal data**

| Type | Air flow m³/h | Air flow cfm | Nominal voltage VDC | Voltage range VDC | Sound pressure level dB(A) | Sound power level Bel(A) | Sintec sleeve bearings □ / Ball bearings ■ | Power consumption* Watts | Nominal speed rpm⁻¹ | Temperature range °C | Service life $L_{10}$ (40 °C) ebm-papst standard / Service life $L_{10}$ ($T_{max}$) ebm-papst standard Hours | Life expectancy $L_{10IPC}$ (40 °C) see page 15 Hours | Curve |
|---|---|---|---|---|---|---|---|---|---|---|---|---|---|
| DV 4112 N | 280 | 165 | **12** | 9...15 | 61 | 6.9 | ■ | 21.0 | 6 000 | -20...+65 | 70 000 / 40 000 | 117 500 | ① |
| DV 4114 N | 280 | 165 | **24** | 16...30 | 61 | 6.9 | ■ | 20.5 | 6 000 | -20...+65 | 70 000 / 40 000 | 117 500 | ① |
| DV 4118 N | 280 | 165 | **48** | 36...60 | 61 | 6.9 | ■ | 20.0 | 6 000 | -20...+65 | 70 000 / 40 000 | 117 500 | ① |

Subject to change

* Power consumption at free air flow. These values can be significantly higher in the operating point.

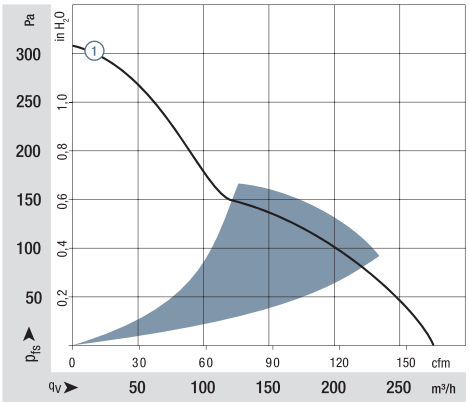


Air performance measured according to: ISO 5801.
Installation category A, without contact protection.
Noise: Total sound power level $L_{WA}$ ISO 10302 measured on a hemisphere with a radius of 2 m.
Sound pressure level $L_{pA}$ measured at 1 m distance from fan axis.
The values given are applicable only under the specified measuring conditions and may differ depending on the installation conditions.
In the event of deviation from the standard configuration, the parameters must be checked after installation!
For detailed information see
http://www.ebmpapst.com/general conditions

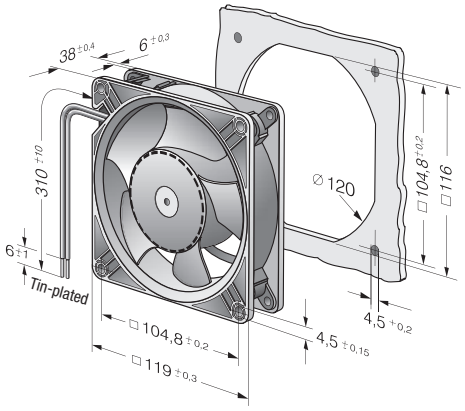

Max. 340 m³/h

# DC axial fans

☐ 127 x 38 mm



- **Material:** Housing: GRP[1] (PBT)
  Impeller: GRP[1] (PA)
- **Direction of air flow:** Exhaust over struts
- **Direction of rotation:** Counterclockwise, looking towards rotor
- **Connection:** Via single wires AWG 22, TR 64
- **Weight:** 310 g

- **Possible special versions:**
  (See chapter DC fans - specials)
  - Speed signal
  - Go / NoGo alarm
  - Alarm with speed limit
  - External temperature sensor
  - Internal temperature sensor
  - PWM control input
  - Analog control input
  - Moisture protection
  - Salt spray protection
  - Degree of protection: IP 54 / IP 68

1) Fiberglass-reinforced plastic

Series 5200 N
VWC0127YUJBS

**Nominal data**

| Type | Air flow m³/h | Air flow cfm | **Nominal voltage** VDC | Voltage range VDC | Sound pressure level dB(A) | Sound power level Bel(A) | Sintec sleeve bearings / Ball bearings □/■ | Power consumption** Watts | Nominal speed rpm⁻¹ | Temperature range °C | Service life $L_{10}$ (40 °C) ebm-papst standard / Service life $L_{10}$ ($T_{max}$) ebm-papst standard Hours | Life expectancy $L_{10IPC}$ (40 °C) see page 15 Hours | Curve |
|---|---|---|---|---|---|---|---|---|---|---|---|---|---|
| 5212 NM | 187 | 110 | **12** | 7...14.5 | 43 | 5.3 | ■ | 4.1 | 2 750 | -20...+75 | 62 500 / 27 500 | 105 000 | ① |
| 5212 NN | 216 | 127 | **12** | 7...14 | 46 | 5.6 | ■ | 6.2 | 3 150 | -20...+70 | 57 500 / 25 000 | 97 500 | ② |
| 5212 NH | 252 | 148 | **12** | 7...14 | 51 | 6.0 | ■ | 9.8 | 3 650 | -20...+70 | 45 000 / 22 500 | 75 000 | ③ |
| 5212 NHH* | 340 | 200 | **12** | 9...15 | 58 | 6.6 | ■ | 19.0 | 4 900 | -20...+65 | 45 000 / 25 000 | 75 000 | ④ |
| 5214 NM | 187 | 110 | **24** | 12...28 | 43 | 5.3 | ■ | 4.6 | 2 750 | -20...+75 | 62 500 / 27 500 | 105 000 | ① |
| 5214 NN | 216 | 127 | **24** | 12...28 | 46 | 5.6 | ■ | 6.0 | 3 150 | -20...+75 | 57 500 / 25 000 | 97 500 | ② |
| 5214 NH | 252 | 148 | **24** | 12...28 | 51 | 6.0 | ■ | 9.8 | 3 650 | -20...+70 | 45 000 / 22 500 | 75 000 | ③ |
| 5214 NHH* | 340 | 200 | **24** | 16...30 | 58 | 6.6 | ■ | 17.5 | 4 900 | -20...+65 | 45 000 / 25 000 | 75 000 | ④ |
| 5218 NM | 187 | 110 | **48** | 36...56 | 43 | 5.3 | ■ | 4.5 | 2 750 | -20...+75 | 62 500 / 27 500 | 105 000 | ① |
| 5218 NN | 216 | 127 | **48** | 36...56 | 46 | 5.6 | ■ | 6.2 | 3 150 | -20...+70 | 57 500 / 32 500 | 97 500 | ② |
| 5218 NH | 252 | 148 | **48** | 36...56 | 51 | 6.0 | ■ | 9.6 | 3 650 | -20...+55 | 45 000 / 32 500 | 75 000 | ③ |
| 5218 NHH* | 340 | 200 | **48** | 36...60 | 58 | 6.6 | ■ | 18.0 | 4 900 | -20...+65 | 45 000 / 25 000 | 75 000 | ④ |

Subject to change

* see drawing

** Power consumption at free air flow, these values can be significantly higher in the operating point.

***NHH models:** fan housing with molded-in spacers.

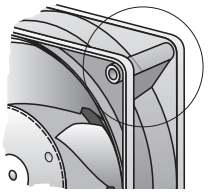

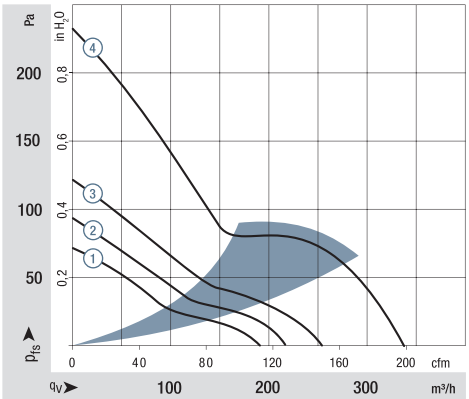


Air performance measured according to: ISO 5801.
Installation category A, without contact protection.
Noise: Total sound power level $L_{WA}$ ISO 10302 measured on a hemisphere with a radius of 2 m.
Sound pressure level $L_{pA}$ measured at 1 m distance from fan axi.
The values given are applicable only under the specified measuring conditions and may differ depending on the installation conditions.
In the event of deviation from the standard configuration, the parametersmust be checked after installation!
For detailed information see
http://www.ebmpapst.com/general conditions

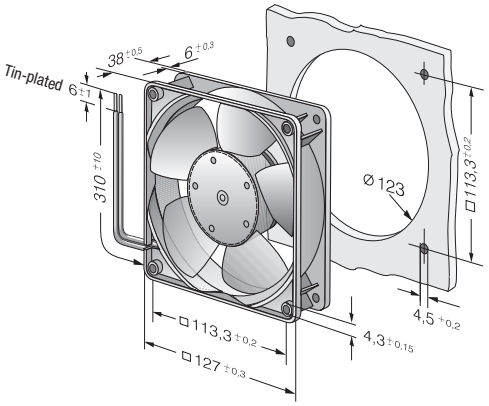




**Finger guards from p. 254**

ebmpapst

Max. 320 m³/h

# DC diagonal fan

☐ 127 x 38 mm



- **Material:** Housing: GRP[1] (PBT)
  Available in Die-cast aluminum
  Metal flange
  Impeller: GRP[1] (PA)
- **Direction of air flow:** Exhaust over struts
- **Direction of rotation:** Counterclockwise, looking towards rotor
- **Connection:** Via single wires AWG 22, TR 64
- **Highlights:** Housing with grounding lug for screw M4 x 8 (Torx)
- **Weight:** 415 g (with metal housing: 490 g)

- **Possible special versions:**
  (See chapter DC fans - specials)
  - Speed signal
  - Go / NoGo alarm
  - Alarm with speed limit
  - External temperature sensor
  - Internal temperature sensor
  - PWM control input
  - Analog control input
  - Moisture protection
  - Salt spray protection
  - Degree of protection: IP 54

1) Fiberglass-reinforced plastic

| Series DV 5200<br>VKC0127AUJBS<br>**Nominal data** | Air flow | Air flow | **Nominal voltage** | Voltage range | Sound pressure level | Sound power level | Sintec sleeve bearings<br>Ball bearings | Power consumption* | Nominal speed | Temperature range | Service life $L_{10}$ (40 °C)<br>ebm-papst standard<br>Service life $L_{10}$ ($T_{max}$)<br>ebm-papst standard | Life expectancy $L_{10IPC}$<br>(40 °C) see page 15 | Curve |
|---|---|---|---|---|---|---|---|---|---|---|---|---|---|
| **Type** | **m³/h** | **cfm** | **VDC** | **VDC** | **dB(A)** | **Bel(A)** | **□ / ■** | **Watts** | **rpm⁻¹** | **°C** | **Hours** | **Hours** | |
| DV 5212 N | 270 | 159 | **12** | 9...15 | 56 | 6.4 | ■ | 21.0 | 5 000 | -20...+65 | 70 000 / 40 000 | 117 500 | ① |
| DV 5214 N | 270 | 159 | **24** | 16...30 | 56 | 6.4 | ■ | 20.4 | 5 000 | -20...+65 | 70 000 / 40 000 | 117 500 | ① |
| DV 5218 N | 270 | 159 | **48** | 36...60 | 56 | 6.4 | ■ | 18.5 | 5 000 | -20...+65 | 70 000 / 40 000 | 117500 | ① |
| **Standard model comes with speed signal and PWM control input. Other versions by request.** | | | | | | | | | | | | | |
| DV 5214/2 HP | 320 | 188 | **24** | 16...30 | 62 | 7.2 | ■ | 38.5 | 6 000 | -20...+65 | 62 500 / 35 000 | 105 000 | ② |

Subject to change

Speed control range from 1000 rpm⁻¹ up to maximum nominal speed.
Standstill at 0 % PWM, maximum speed if control cable is interrupted.
* Power consumption at free air flow. These values can be significantly higher in the operating point.

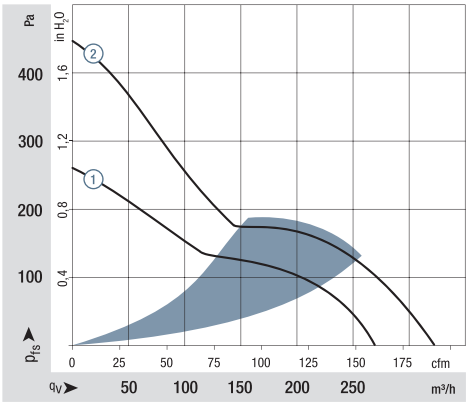


Air performance measured according to: ISO 5801.
Installation category A, without contact protection.
Noise: Total sound power level $L_{WA}$ ISO 10302 measured on a hemisphere with a radius of 2 m.
Sound pressure level $L_{pA}$ measured at 1 m distance from fan axis.
The values given are applicable only under the specified measuring conditions and may differ depending on the installation conditions.
In the event of deviation from the standard configuration, the parameters must be checked after installation!
For detailed information see
http://www.ebmpapst.com/general conditions

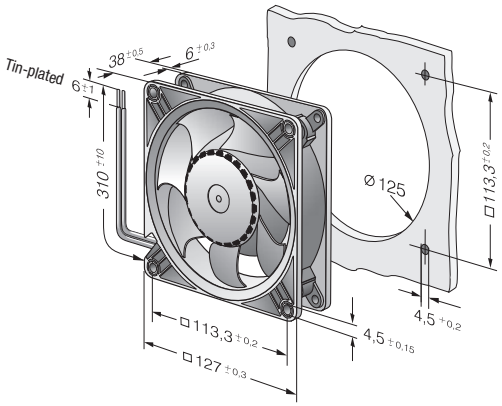

Max. 260 m³/h

# DC axial fans

☐ 135 x 38 mm



- **Material:** Housing: Die-cast aluminum
  Impeller: painted sheet steel
- **Direction of air flow:** Exhaust over struts
- **Direction of rotation:** Counterclockwise, looking towards rotor
- **Connection:** Via single wires AWG 22, TR 64
- **Highlights:** Housing with grounding lug for screw M4 x 8 (Torx)
  48 V design incl. screws.
- **Weight:** 650 g

- **Possible special versions:**
  (See chapter DC fans - specials)
  - Speed signal
  - Go / NoGo alarm
  - Alarm with speed limit
  - External temperature sensor
  - Internal temperature sensor
  - PWM control input
  - Analog control input
  - Moisture protection
  - Salt spray protection
  - Degree of protection: IP 54

Series 5100 N
VWC0135YULBS

| Nominal data | Air flow | Air flow | Nominal voltage | Voltage range | Sound pressure level | Sound power level | Sintec sleeve bearings / Ball bearings | Power consumption* | Nominal speed | Temperature range | Service life $L_{10}$ (40 °C) ebm-papst standard / Service life $L_{10}$ ($T_{max}$) ebm-papst standard | Life expectancy $L_{10IPC}$ (40 °C) see page 15 | Curve |
|---|---|---|---|---|---|---|---|---|---|---|---|---|---|
| **Type** | **m³/h** | **cfm** | **VDC** | **VDC** | **dB(A)** | **Bel(A)** | **☐ / ■** | **Watts** | **rpm⁻¹** | **°C** | **Hours** | **Hours** | |
| 5112 N | 260 | 153 | **12** | 6...15 | 48 | 6.1 | ■ | 9.5 | 2 900 | -25...+72 | 80 000 / 37 500 | 135 000 | ① |
| 5114 N | 260 | 153 | **24** | 12...30 | 48 | 6.1 | ■ | 9.5 | 2 900 | -25...+72 | 80 000 / 37 500 | 135 000 | ① |
| 5118 N | 260 | 153 | **48** | 24...60 | 48 | 6.1 | ■ | 9.5 | 2 900 | -25...+72 | 80 000 / 37 500 | 135 000 | ① |

Subject to change

* Power consumption at free air flow. These values can be significantly higher in the operating point.

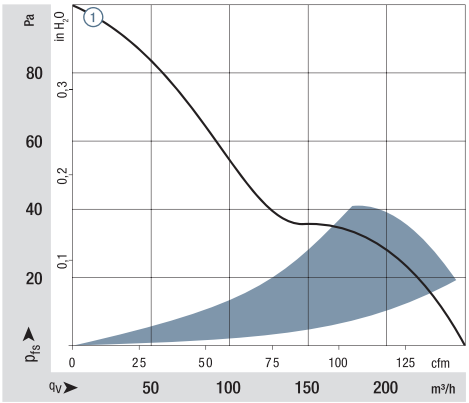


Air performance measured according to: ISO 5801.
Installation category A, without contact protection.
Noise: Total sound power level $L_{WA}$ ISO 10302 measured on a hemisphere with a radius of 2 m.
Sound pressure level $L_{pA}$ measured at 1 m distance from fan axis.
The values given are applicable only under the specified measuring conditions and may differ depending on the installation conditions.
In the event of deviation from the standard configuration, the parameters must be checked after installation!
For detailed information see
http://www.ebmpapst.com/general conditions

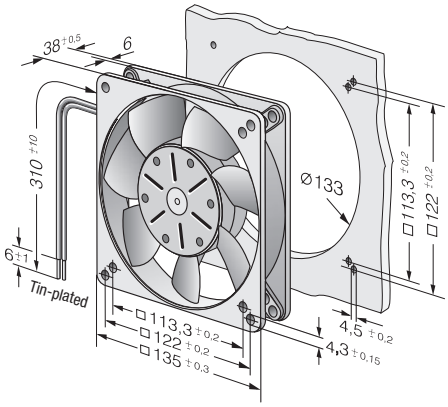




**Finger guards from p. 254**

ebmpapst

Max. 340 m³/h

S-Force

# DC axial fans

□ 140 x 51 mm



- **Material:** Housing: Die-cast aluminum
  Impeller: GRP[1] (PA)
- **Direction of air flow:** Intake over struts
- **Direction of rotation:** Counterclockwise, looking towards rotor
- **Connection:** Via single wires AWG 22, TR 64
- **Highlights:** Housing with grounding lug for screw M4 x 8 (Torx)
- **Weight:** 900 g

- **Possible special versions:**
  (See chapter DC fans - specials)
  - Speed signal
  - Go / NoGo alarm
  - Alarm with speed limit
  - External temperature sensor
  - Internal temperature sensor
  - PWM control input
  - Analog control input
  - Moisture protection
  - Salt spray protection
  - Degree of protection: IP 54

1) Fiberglass-reinforced plastic

Series 5300
VUC0140AULCS

**Nominal data**

| Type | Air flow m³/h | Air flow cfm | **Nominal voltage** VDC | Voltage range VDC | Sound pressure level dB(A) | Sound power level Bel(A) | Sintec sleeve bearings □ / Ball bearings ■ | Power consumption* Watts | Nominal speed rpm⁻¹ | Temperature range °C | Service life $L_{10}$ (40 °C) ebm-papst standard / Service life $L_{10}$ ($T_{max}$) ebm-papst standard Hours | Life expectancy $L_{10IPC}$ (40 °C) see page 15 Hours | Curve |
|---|---|---|---|---|---|---|---|---|---|---|---|---|---|
| 5314/2 HP | 340 | 200 | **24** | 16...28 | 64 | 7.2 | ■ | 28.4 | 5 000 | -20...+65 | 77 500 / 40 000 | 130 000 | ① |
| 5318/2 HP | 340 | 200 | **48** | 36...72 | 64 | 7.2 | ■ | 27 | 5 000 | -20...+65 | 77 500 / 40 000 | 130 000 | ① |

Subject to change

Speed control range from 700 rpm⁻¹ up to maximum nominal speed.
Standstill at 0% PWM, maximum speed if control cable is interrupted.
* Power consumption at free air flow. These values can be significantly higher in the operating point.

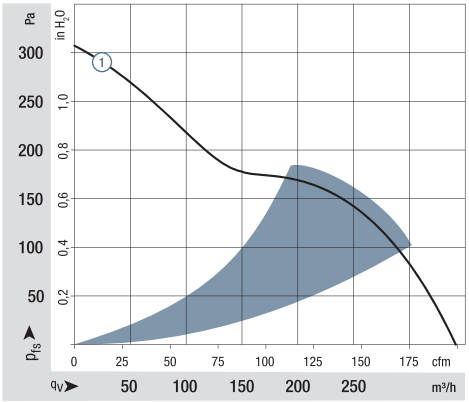


Air performance measured according to: ISO 5801.
Installation category A, without contact protection.
Noise: Total sound power level $L_{WA}$ ISO 10302 measured on a hemisphere with a radius of 2 m.
Sound pressure level $L_{pA}$ measured at 1 m distance from fan axis.
The values given are applicable only under the specified measuring conditions and may differ depending on the installation conditions.
In the event of deviation from the standard configuration, the parameters must be checked after installation!
For detailed information see
http://www.ebmpapst.com/general conditions

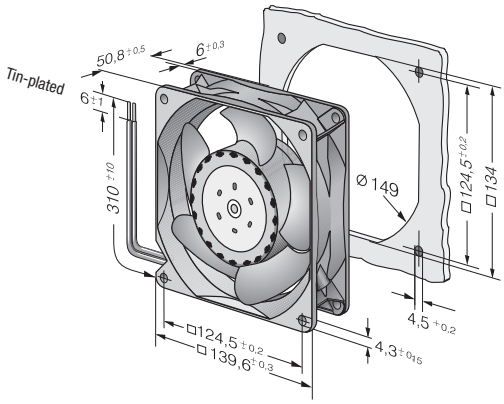

Max. 670 m³/h

S-Force

# DC axial fans

□ 140 x 51 mm



- **Material:** Housing: Die-cast aluminum
  Impeller: GRP[1] (PA)
- **Direction of air flow:** Intake over struts
- **Direction of rotation:** Counterclockwise, looking towards rotor
- **Connection:** Via single wires AWG 20 and AWG 22, TR 64
- **Highlights:** 3-phase fan drive with very smooth operation
  Housing with grounding lug for screw M4 x 8 (Torx)
- **Weight:** 900 g

1) Fiberglass-reinforced plastic

- **Possible special versions:**
  (See chapter DC fans - specials)
  - Speed signal
  - Go / NoGo alarm
  - Alarm with speed limit
  - External temperature sensor
  - Internal temperature sensor
  - PWM control input
  - Analog control input
  - Multi-option control input
  - Moisture protection
  - Salt spray protection
  - Degree of protection: IP 54

Series 5300 TD
VUC0140AULDS

**Nominal data**

| Type | Air flow | Air flow | Nominal voltage | Voltage range | Sound pressure level | Sound power level | Sintec sleeve bearings / Ball bearings | Power consumption* | Nominal speed | Temperature range | Service life $L_{10}$ (40 °C) ebm-papst standard / Service life $L_{10}$ ($T_{max}$) ebm-papst standard | Life expectancy $L_{10IPC}$ (40 °C) see page 15 | Curve |
|---|---|---|---|---|---|---|---|---|---|---|---|---|---|
| | m³/h | cfm | VDC | VDC | dB(A) | Bel(A) | □ / ■ | Watts | rpm⁻¹ | °C | Hours | Hours | |
| 5312/2 TDHP | 410 | 241 | **12** | 8...16 | 70 | 7.7 | ■ | 43 | 6 000 | -20...+70 | 70 000 / 35 000 | 117 500 | ① |
| 5314/2 TDHP | 410 | 241 | **24** | 16...36 | 70 | 7.7 | ■ | 42 | 6 000 | -20...+70 | 70 000 / 35 000 | 117 500 | ① |
| 5314/2 TDHHP | 490 | 288 | **24** | 16...36 | 75 | 8.1 | ■ | 67 | 7 000 | -20...+70 | 62 500 / 30 000 | 105 000 | ② |
| 5318/2 TDHP | 410 | 241 | **48** | 36...72 | 70 | 7.7 | ■ | 42 | 6 000 | -20...+70 | 70 000 / 35 000 | 117 500 | ① |
| 5318/2 TDHHP | 490 | 288 | **48** | 36...72 | 75 | 8.1 | ■ | 66 | 7 000 | -20...+70 | 62 500 / 30 000 | 105 000 | ② |
| 5318/2 TDH4P | 670 | 394 | **48** | 36...72 | 79 | 8.8 | ■ | 149 | 9 200 | -20...+65 | 57 500 / 32 500 | 97 500 | ③ |

Subject to change

Speed control range from 1000 rpm⁻¹ up to maximum nominal speed.
Standstill at 0 % PWM, maximum speed if control cable is interrupted.
* Power consumption at free air flow. These values can be significantly higher in the operating point.

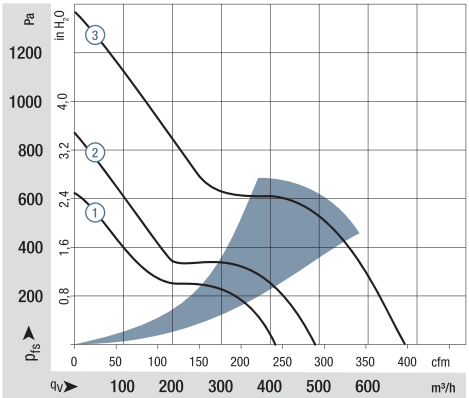


Air performance measured according to: ISO 5801.
Installation category A, without contact protection.
Noise: Total sound power level $L_{WA}$ ISO 10302 measured on a hemisphere with a radius of 2 m.
Sound pressure level $L_{pA}$ measured at 1 m distance from fan axis.
The values given are applicable only under the specified measuring conditions and may differ depending on the installation conditions.
In the event of deviation from the standard configuration, the parameters must be checked after installation!
For detailed information see
http://www.ebmpapst.com/general conditions

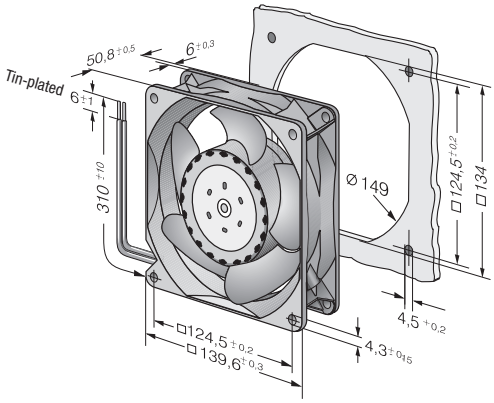




Finger guards
from p. 254

ebmpapst

Max. 360 m³/h

# DC axial fans

## Ø 150 x 38 mm



- **Material:** Housing: Die-cast aluminum
  Impeller: painted sheet steel
- **Direction of air flow:** Exhaust over struts
- **Direction of rotation:** Counterclockwise, looking towards rotor
- **Connection:** Via single wires AWG 22, TR 64
- **Highlights:** Housing with grounding lug for screw M4 x 8 (Torx)
- **Weight:** 620 g

- **Possible special versions:**
  (See chapter DC fans - specials)
  - Speed signal
  - Go / NoGo alarm
  - Alarm with speed limit
  - External temperature sensor
  - Internal temperature sensor
  - PWM control input
  - Analog control input
  - Moisture protection
  - Salt spray protection
  - Degree of protection:IP 54 / IP 68

Series 7100 N
VWS0140XULBS

**Nominal data**

| Type | Air flow m³/h | Air flow cfm | **Nominal voltage** VDC | Voltage range VDC | Sound pressure level dB(A) | Sound power level Bel(A) | Sintec sleeve bearings □ / Ball bearings ■ | Power consumption* Watts | Nominal speed rpm⁻¹ | Temperature range °C | Service life $L_{10}$ (40 °C) ebm-papst standard / Service life $L_{10}$ ($T_{max}$) ebm-papst standard Hours | Life expectancy $L_{10IPC}$ (40 °C) see page 15 Hours | Curve |
|---|---|---|---|---|---|---|---|---|---|---|---|---|---|
| 7112 N | 308 | 181 | **12** | 6...15 | 53 | 6.2 | ■ | 12.0 | 2 850 | -25...+72 | 80 000 / 37 500 | 135 000 | ① |
| 7114 N | 308 | 181 | **24** | 12...30 | 53 | 6.2 | ■ | 12.0 | 2 850 | -25...+72 | 80 000 / 37 500 | 135 000 | ① |
| 7114 NH | 360 | 212 | **24** | 12...26.5 | 58 | 6.7 | ■ | 19.0 | 3 350 | -25...+72 | 75 000 / 35 000 | 127 500 | ② |
| 7118 N | 308 | 181 | **48** | 24...60 | 53 | 6.2 | ■ | 12.0 | 2 850 | -25...+72 | 80 000 / 37 500 | 135 000 | ① |

Subject to change

* Power consumption at free air flow. These values can be significantly higher in the operating point.

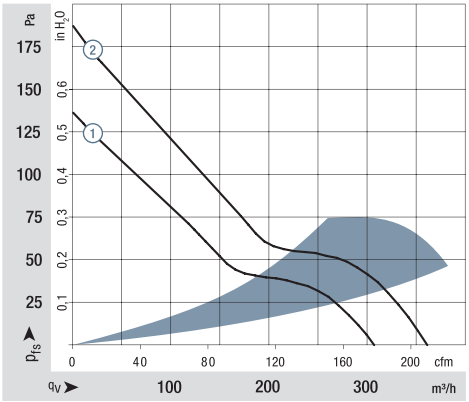


Air performance measured according to: ISO 5801.
Installation category A, without contact protection.
Noise: Total sound power level $L_{WA}$ ISO 10302 measured on a hemisphere with a radius of 2 m.
Sound pressure level $L_{pA}$ measured at 1 m distance from fan axis.
The values given are applicable only under the specified measuring conditions and may differ depending on the installation conditions.
In the event of deviation from the standard configuration, the parameters must be checked after installation!
For detailed information see
http://www.ebmpapst.com/general conditions

Wire fastened with cable tie.
Strand fastened using cable tie; cable tie protrudes 1 mm.

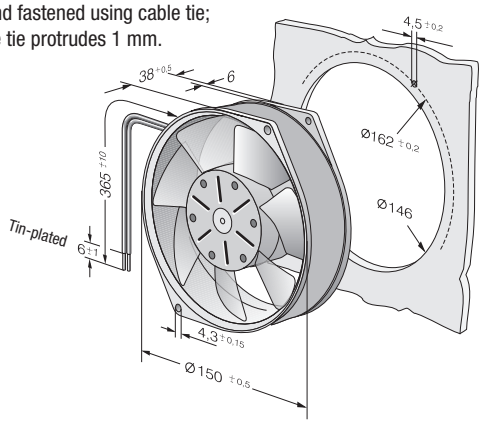


Finger guards
from p. 254

Max. 360 m³/h

# DC axial fans

## Ø 150 x 55 mm



- **Material:** Housing: Die-cast aluminum
  Impeller: GRP[1] (PA)
- **Direction of air flow:** Exhaust over struts
- **Direction of rotation:** Counterclockwise, looking towards rotor
- **Connection:** Via single wires AWG 22, TR 64
- **Highlights:** Housing with grounding lug for screw M4 x 8 (Torx)
- **Weight:** 725 g

- **Possible special versions:**
  (See chapter DC fans - specials)
  - Speed signal
  - Go / NoGo alarm
  - Alarm with speed limit
  - External temperature sensor
  - Internal temperature sensor
  - PWM control input
  - Analog control input
  - Moisture protection
  - Salt spray protection
  - Degree of protection: IP 54 / IP 68

1) Fiberglass-reinforced plastic

Series 7200 N
VWS0143XULCS

**Nominal data**

| Type | Air flow m³/h | Air flow cfm | Nominal voltage VDC | Voltage range VDC | Sound pressure level dB(A) | Sound power level Bel(A) | Sintec sleeve bearings / Ball bearings □/■ | Power consumption* Watts | Nominal speed rpm⁻¹ | Temperature range °C | Service life $L_{10}$ (40 °C) ebm-papst standard / Service life $L_{10}$ ($T_{max}$) ebm-papst standard Hours | Life expectancy $L_{10IPC}$ (40 °C) see page 15 Hours | Curve |
|---|---|---|---|---|---|---|---|---|---|---|---|---|---|
| 7212 N | 360 | 212 | **12** | 6...15 | 53 | 6.2 | ■ | 12.0 | 3 050 | -25...+72 | 80 000 / 37 500 | 135 000 | ① |
| 7214 N | 360 | 212 | **24** | 12...30 | 53 | 6.2 | ■ | 12.0 | 3 050 | -25...+72 | 80 000 / 37 500 | 135 000 | ① |
| 7218 N | 360 | 212 | **48** | 24...60 | 53 | 6.2 | ■ | 12.0 | 3 050 | -25...+72 | 80 000 / 37 500 | 135 000 | ① |

Subject to change

* Power consumption at free air flow. These values can be significantly higher in the operating point.

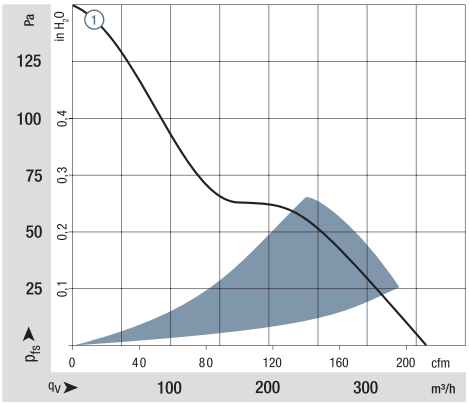


Air performance measured according to: ISO 5801.
Installation category A, without contact protection.
Noise: Total sound power level $L_{WA}$ ISO 10302 measured on a hemisphere with a radius of 2 m.
Sound pressure level $L_{pA}$ measured at 1 m distance from fan axis.
The values given are applicable only under the specified measuring conditions and may differ depending on the installation conditions.
In the event of deviation from the standard configuration, the parameters must be checked after installation!
For detailed information see
http://www.ebmpapst.com/general conditions

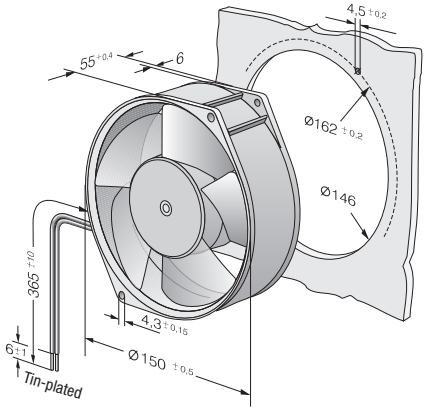




ebmpapst

Max. 480 m³/h

# DC axial fans

## 172 x 150 x 51 mm



- **Material:** Housing: Die-cast aluminum
  Impeller: GRP[1)] (PA)
- **Direction of air flow:** Exhaust over struts
- **Direction of rotation:** Counterclockwise, looking towards rotor
- **Connection:** on flat plugs 3 x 0.5 mm
- **Highlights:** Housing with grounding lug for screw M4 x 8 (Torx)
- **Weight:** 760 g

- **Possible special versions:**
  (See chapter DC fans - specials)
  - Speed signal
  - Go / NoGo alarm
  - Alarm with speed limit
  - External temperature sensor
  - Internal temperature sensor
  - PWM control input
  - Analog control input
  - Moisture protection
  - Salt spray protection
  - Degree of protection: IP 54

1) Fiberglass-reinforced plastic

Series 6400
VWS0143XULCS

**Nominal data**

| Type | Air flow | Air flow | Nominal voltage | Voltage range | Sound pressure level | Sound power level | Sintec sleeve bearings / Ball bearings | Power consumption*** | Nominal speed | Temperature range | Service life $L_{10}$ (40 °C) ebm-papst standard | Service life $L_{10}$ ($T_{max}$) ebm-papst standard | Life expectancy $L_{10IPC}$ (40 °C) see page 15 | Curve |
|---|---|---|---|---|---|---|---|---|---|---|---|---|---|---|
| | m³/h | cfm | VDC | VDC | dB(A) | Bel(A) | □/■ | Watts | rpm⁻¹ | °C | Hours | | Hours | |
| 6412 M | 350 | 206 | **12** | 8...15 | 52 | 6.0 | ■ | 12 | 2 850 | -20...+72 | 80 000 / 37 500 | | 135 000 | ① |
| 6424 M | 350 | 206 | **24** | 12...32 | 52 | 6.0 | ■ | 12 | 2 850 | -20...+72 | 80 000 / 37 500 | | 135 000 | ① |
| 6424 | 410 | 241 | **24** | 12...28 | 57 | 6.4 | ■ | 17 | 3 400 | -20...+72 | 75 000 / 35 000 | | 127 500 | ② |
| 6424 H | 480 | 283 | **24** | 12...28 | 63 | 7.1 | ■ | 26 | 4 000 | -20...+55** | 70 000 / 50 000 | | 117 500 | ③ |
| 6448 | 410 | 241 | **48** | 28...60 | 57 | 6.4 | ■ | 17 | 3 400 | -20...+72 | 75 000 / 35 000 | | 127 500 | ② |
| 6448 H* | 480 | 283 | **48** | 28...60 | 63 | 7.1 | ■ | 26 | 4 000 | -20...+55** | 70 000 / 50 000 | | 117 500 | ③ |

Subject to change

* Strand 310 mm.
** 72 °C versions on request
*** Power consumption at free air flow, these values can be significantly higher in the operating point.

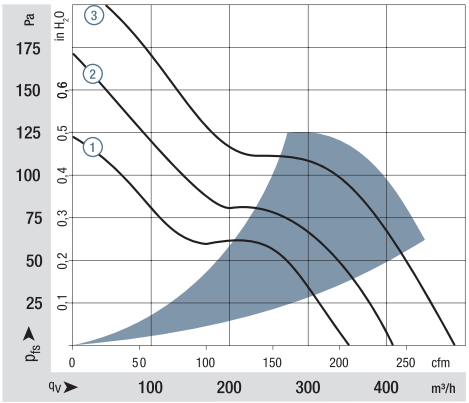


Air performance measured according to: ISO 5801.
Installation category A, without contact protection.
Noise: Total sound power level $L_{WA}$ ISO 10302 measured on a hemisphere with a radius of 2 m.
Sound pressure level $L_{pA}$ measured at 1 m distance from fan axis.
The values given are applicable only under the specified measuring conditions and may differ depending on the installation conditions.
In the event of deviation from the standard configuration, the parameters must be checked after installation!
For detailed information see
http://www.ebmpapst.com/general conditions

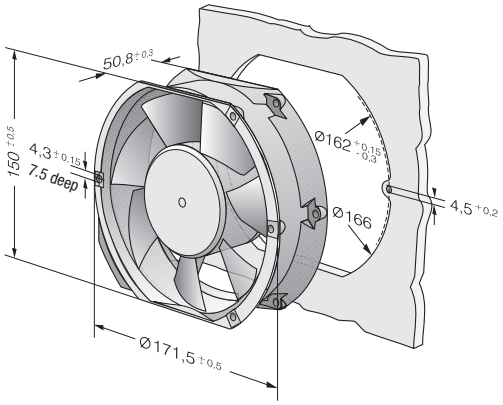

Max. 900 m³/h

# DC axial fans

172 x 150 x 51 mm



- **Material:** Housing: Die-cast aluminum
  Impeller: GRP[1] (PA)
- **Direction of air flow:** Exhaust over struts
- **Direction of rotation:** Counterclockwise, looking towards rotor
- **Connection:** Via single wires AWG 18, 20 or AWG 22, TR 64, speed signal and control input AWG 22
- **Highlights:** Highly efficient and smoothly operating 3-phase fan drive
  Housing with grounding lug for screw M4 x 8 (Torx)
- **Weight:** 760 g

1) Fiberglass-reinforced plastic

- **Possible special versions:**
  (See chapter DC fans - specials)
  - Speed signal
  - Go / NoGo alarm
  - Alarm with speed limit
  - External temperature sensor
  - Internal temperature sensor
  - PWM control input
  - Analog control input
  - Moisture protection
  - Salt spray protection
  - Degree of protection: IP 54
  - Reversible direction of rotation

Series 6400 TD
VWS0143XULCS

**Nominal data**

| | Type | Air flow | Air flow | Nominal voltage | Voltage range | Sound pressure level | Sound power level | Sintec sleeve bearings / Ball bearings | Power consumption** | Nominal speed | Temperature range | Service life $L_{10}$ (40 °C) ebm-papst standard / Service life $L_{10}$ ($T_{max}$) ebm-papst standard | Life expectancy $L_{10IPC}$ (40 °C) see page 15 | Curve |
|---|---|---|---|---|---|---|---|---|---|---|---|---|---|---|
| | | m³/h | cfm | VDC | VDC | dB(A) | Bel(A) | □ / ■ | Watts | rpm⁻¹ | °C | Hours | Hours | |
| Min | 6424 TD... | 90 | 53 | 24 | 16...28 | 18 | — | ■ | 2 | 800 | -20...+60 | 70 000 / 45 000 | 117 500 | ① |
| Max | | 600 | 353 | | | 65 | 7.4 | | 50 | 5 100 | | | | ② |
| Min | 6448 TD... | 90 | 53 | 48 | 40...55* | 18 | — | ■ | 2 | 800 | -20...+60 | 70 000 / 45 000 | 117 500 | ① |
| Max | | 600 | 353 | | | 65 | 7.4 | | 50 | 5 100 | | | | ② |
| Min | 6448 TDHH... | 90 | 53 | 48 | 36...72 | 18 | — | ■ | 2 | 800 | -20...+60 | 70 000 / 45 000 | 117 500 | ① |
| Max | | 900 | 530 | | | 78 | 8.6 | | 163 | 7500 | | | | ③ |

Subject to change

* Variants with an extended voltage range available on request.

Models 6424 TD..., 6448 TD... and 6448 TDHH... are available in customer-specific, custom-developed variants only.
The figures indicated are technically feasible benchmark values. The fans can be specially adapted to your application with signal outputs and control inputs.
For details of the technical possibilities, refer to the chapters on the sensor signal, alarm signal and control inputs beginning on page 175.
** Power consumption at free air flow, these values can be significantly higher in the operating point.

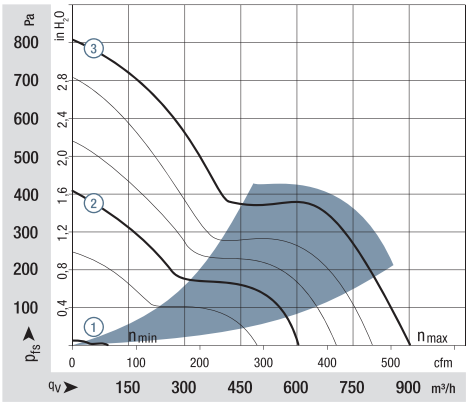


Air performance measured according to: ISO 5801.
Installation category A, without contact protection.
Noise: Total sound power level $L_{WA}$ ISO 10302 measured on a hemisphere with a radius of 2 m.
Sound pressure level $L_{pA}$ measured at 1 m distance from fan axis.
The values given are applicable only under the specified measuring conditions and may differ depending on the installation conditions.
In the event of deviation from the standard configuration, the parameters must be checked after installation!
For detailed information see
http://www.ebmpapst.com/general conditions

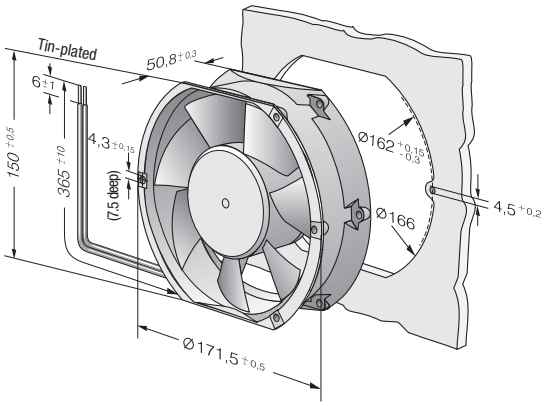




ebmpapst

Max. 530 m³/h

# DC diagonal fan

172 x 160 x 51 mm



- **Material:** Housing: Die-cast aluminum
  Impeller: GRP[1] (PA)
- **Direction of air flow:** Exhaust over struts
- **Direction of rotation:** Counterclockwise, looking towards rotor
- **Connection:** Via single wires AWG 22, TR 64
- **Highlights:** Housing with grounding lug for screw M4 x 8 (Torx)
- **Weight:** 820 g

- **Possible special versions:**
  (See chapter DC fans - specials)
  - Speed signal
  - Go / NoGo alarm
  - Alarm with speed limit
  - External temperature sensor
  - Internal temperature sensor
  - PWM control input
  - Analog control input
  - Moisture protection
  - Salt spray protection
  - Degree of protection: IP 54

1) Fiberglass-reinforced plastic

| Series DV 6400<br>VKS0154XULCS<br>**Nominal data** | Air flow | Air flow | **Nominal voltage** | Voltage range | Sound pressure level | Sound power level | Sintec sleeve bearings<br>Ball bearings | Power consumption | Nominal speed | Temperature range | Service life $L_{10}$ (40 °C)<br>ebm-papst standard | Service life $L_{10}$ ($T_{max}$)<br>ebm-papst standard | Life expectancy $L_{10IPC}$<br>(40 °C) see page 15 | Curve |
|---|---|---|---|---|---|---|---|---|---|---|---|---|---|---|
| **Type** | **m³/h** | **cfm** | **VDC** | **VDC** | **dB(A)** | **Bel(A)** | □/■ | **Watts** | **rpm⁻¹** | **°C** | **Hours** | | **Hours** | |
| DV 6424 | 530 | 312 | **24** | 16...28 | 65 | 7.3 | ■ | 40 | 4 300 | -20...+75 | 90 000 / 35 000 | | 152 500 | ① |
| DV 6448/12 | 530 | 312 | **48** | 28...60 | 65 | 7.3 | ■ | 40 | 4 300 | -20...+75 | 90 000 / 35 000 | | 152 500 | ① |

Subject to change

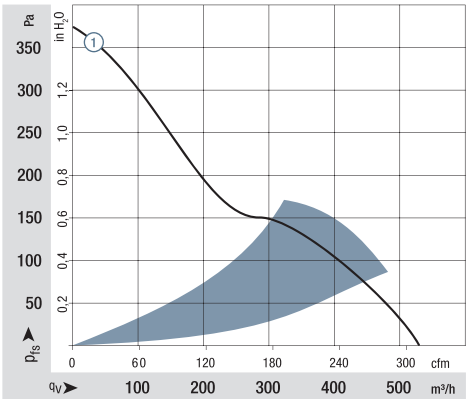


Air performance measured according to: ISO 5801.
Installation category A, without contact protection.
Noise: Total sound power level $L_{WA}$ ISO 10302 measured on a hemisphere with a radius of 2 m.
Sound pressure level $L_{pA}$ measured at 1 m distance from fan axis.
The values given are applicable only under the specified measuring conditions and may differ depending on the installation conditions.
In the event of deviation from the standard configuration, the parameters must be checked after installation!
For detailed information see
http://www.ebmpapst.com/general conditions

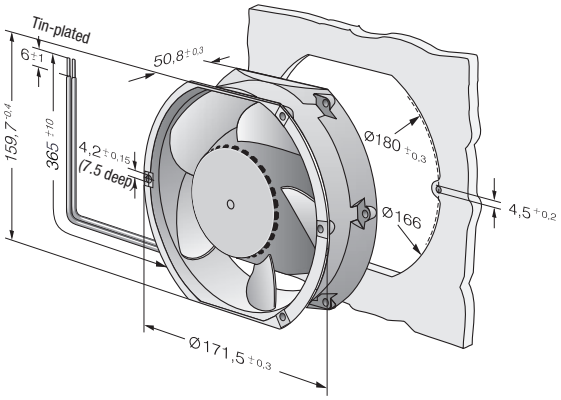

Max. 680 m³/h

# DC diagonal fan

172 x 160 x 51 mm



- **Material:** Housing: Die-cast aluminum
  Impeller: GRP[1] (PA)
- **Direction of air flow:** Exhaust over struts
- **Direction of rotation:** Counterclockwise, looking towards rotor
- **Connection:** Via single wires AWG 22, TR 64
- **Highlights:** 3-phase fan drive with very smooth operation and high efficiency. Housing with grounding lug for screw M4 x 8 (Torx)
- **Weight:** 820 g

1) Fiberglass-reinforced plastic

- **Possible special versions:**
  (See chapter DC fans - specials)
  - Speed signal
  - Go / NoGo alarm
  - Alarm with speed limit
  - External temperature sensor
  - Internal temperature sensor
  - PWM control input
  - Analog control input
  - Moisture protection
  - Salt spray protection
  - Degree of protection: IP 54
  - Reversible direction of rotation

Series DV 6400 TD
TURBOFAN
VKS0154XULCS

**Nominal data**

| | Type | Air flow m³/h | Air flow cfm | Nominal voltage VDC | Voltage range VDC | Sound pressure level dB(A) | Sound power level Bel(A) | Sintec sleeve bearings □ / Ball bearings ■ | Power consumption* Watts | Nominal speed rpm⁻¹ | Temperature range °C | Service life $L_{10}$ (40 °C) ebm-papst standard Hours | Service life $L_{10}$ ($T_{max}$) ebm-papst standard Hours | Life expectancy $L_{10IPC}$ (40 °C) see page 15 Hours | Curve |
|---|---|---|---|---|---|---|---|---|---|---|---|---|---|---|---|
| Min | DV 6424 TD... | 100 | 59 | **24** | 16...28 | 29 | — | ■ | 2 | 800 | -20...+60 | 65 000 / 40 000 | | 110 000 | ① |
| Max | | 680 | 400 | | | 71 | 7.9 | | 91 | 5 500 | | | | | ② |
| Min | DV 6448 TD... | 100 | 59 | **48** | 40...55 | 29 | — | ■ | 2 | 800 | -20...+60 | 65 000 / 40 000 | | 110 000 | ① |
| Max | | 680 | 400 | | | 71 | 7.9 | | 86 | 5 500 | | | | | ② |

Subject to change

Models DV 6424 TD... and DV 6448 TD... are available in customer-specific, custom-developed variants only.
The figures indicated are technically feasible benchmark values. The fans can be specially adapted to your application with signal outputs and control inputs.
For details of the technical possibilities, refer to the chapters on the sensor signal, alarm signal and control inputs beginning on page 175.
* Power consumption at free air flow. These values can be significantly higher in the operating point.

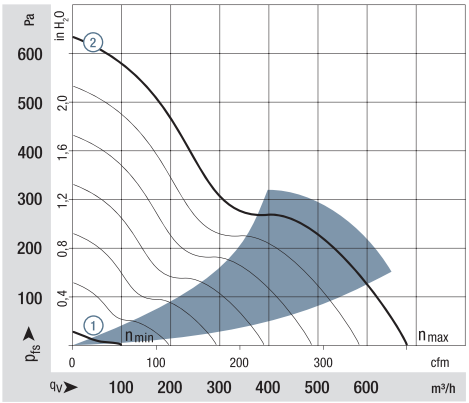


Air performance measured according to: ISO 5801.
Installation category A, without contact protection.
Noise: Total sound power level $L_{WA}$ ISO 10302 measured on a hemisphere with a radius of 2 m.
Sound pressure level $L_{pA}$ measured at 1 m distance from fan axis.
The values given are applicable only under the specified measuring conditions and may differ depending on the installation conditions.
In the event of deviation from the standard configuration, the parameters must be checked after installation!
For detailed information see
http://www.ebmpapst.com/general conditions

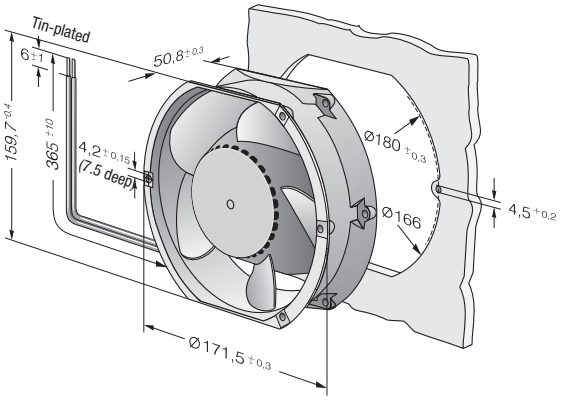




ebmpapst

Max. 1030 m³/h

**S-Panther**

# DC axial fans

172 x 160 x 51 mm



- **Material:** Housing: Die-cast aluminum
  Impeller: GRP[1)] (PA)
- **Direction of air flow:** Exhaust over struts
- **Direction of rotation:** Counterclockwise, looking towards rotor
- **Connection:** Via single wires AWG 18, 20 or AWG 22, TR 64, speed and alarm signals: AWG 22
- **Highlights:** Highly efficient and smoothly operating 3-phase fan drive
  Housing with grounding lug for screw M4 x 8 (Torx)
- **Weight:** 875 g

1) Fiberglass-reinforced plastic

- **Possible special versions:**
  (See chapter DC fans - specials)
  - Speed signal
  - Go / NoGo alarm
  - Alarm with speed limit
  - External temperature sensor
  - Internal temperature sensor
  - PWM control input (standard)
  - Analog control input
  - Multi-option control input
  - Moisture protection
  - Salt spray protection
  - Degree of protection: IP 54

Series 6300 NTD
VWS0148PULDS

**Nominal data**

| Type | Air flow m³/h | Air flow cfm | Nominal voltage VDC | Voltage range VDC | Sound pressure level dB(A) | Sound power level Bel(A) | Sintec sleeve bearings / Ball bearings □ / ■ | Power consumption* Watts | Nominal speed rpm⁻¹ | Temperature range °C | Service life $L_{10}$ (40 °C) ebm-papst standard Hours | Service life $L_{10}$ ($T_{max}$) ebm-papst standard Hours | Life expectancy $L_{10IPC}$ (40 °C) see page 15 Hours | Curve |
|---|---|---|---|---|---|---|---|---|---|---|---|---|---|---|
| 6318 N/2 TDH3P-303 | 1030 | 611 | **48** | 36...72 | 76 | 8.3 | ■ | 160 | 7 500 | -20...+70 | 60 000 / 30 000 | | 102 500 | ① |

Subject to change

Speed control range from 1000 rpm⁻¹ up to maximum nominal speed. Standstill at 0 % PWM, maximum speed if control cable is interrupted.
* Power consumption at free air flow. These values can be significantly higher in the operating point.

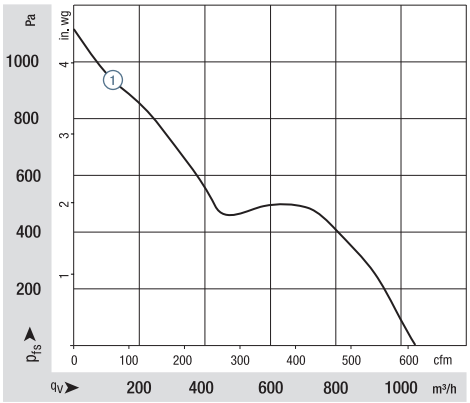


Air performance measured according to: ISO 5801.
Installation category A, without contact protection.
Noise: Total sound power level $L_{WA}$ ISO 10302 measured on a hemisphere with a radius of 2 m.
Sound pressure level $L_{pA}$ measured at 1 m distance from fan axis.
The values given are applicable only under the specified measuring conditions and may differ depending on the installation conditions.
In the event of deviation from the standard configuration, the parameters must be checked after installation!
For detailed information see
http://www.ebmpapst.com/general conditions

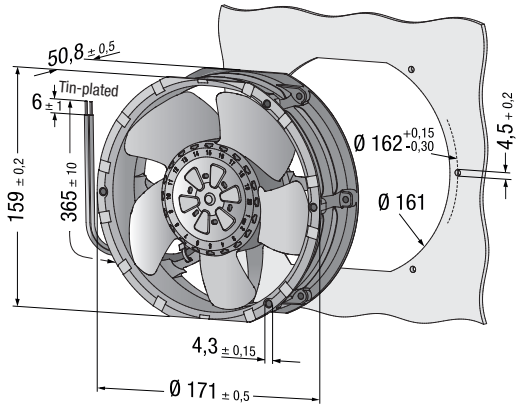

Max. 930 m³/h

S-Force

# DC axial fans

172 x 160 x 51 mm



- **Material:** Housing: Die-cast aluminum
  Impeller: GRP[1] (PA)
- **Direction of air flow:** Exhaust over struts
- **Direction of rotation:** Counterclockwise, looking towards rotor
- **Connection:** Via single wires AWG 18, 20 or AWG 22, TR 64, speed signal and control input AWG 22
- **Highlights:** Highly efficient and smoothly operating 3-phase fan drive
  Housing with grounding lug for screw M4 x 8 (Torx)
- **Weight:** 910 g

1) Fiberglass-reinforced plastic

- **Possible special versions:**
  (See chapter DC fans - specials)
  - Speed signal
  - Go / NoGo alarm
  - Alarm with speed limit
  - External temperature sensor
  - Internal temperature sensor
  - PWM control input (standard)
  - Analog control input
  - Multi-option control input
  - Moisture protection
  - Salt spray protection
  - Degree of protection: IP 54

Series 6300 TD
VWS0148XULDS

**Nominal data**

| Type | Air flow m³/h | Air flow cfm | Nominal voltage VDC | Voltage range VDC | Sound pressure level dB(A) | Sound power level Bel(A) | Sintec sleeve bearings □ / Ball bearings ■ | Power consumption* Watts | Nominal speed rpm⁻¹ | Temperature range °C | Service life $L_{10}$ (40 °C) ebm-papst standard Hours | Service life $L_{10}$ ($T_{max}$) ebm-papst standard Hours | Life expectancy $L_{10IPC}$ (40 °C) see page 15 Hours | Curve |
|---|---|---|---|---|---|---|---|---|---|---|---|---|---|---|
| 6314/2 TDHHP-015 | 710 | 418 | **24** | 16...36 | 69 | 7.9 | ■ | 67 | 7 000 | -20...+75 | 62 500 / 25 000 | | 105 000 | ① |
| 6318/2 TDH4P-007 | 930 | 546 | **48** | 36...72 | 75 | 8.4 | ■ | 150 | 9 200 | -20...+75 | 52 500 / 20 000 | | 87 500 | ② |

Subject to change

Speed control range from 1000 rpm⁻¹ up to maximum nominal speed.
Standstill at 0 % PWM, maximum speed if control cable is interrupted.
* Power consumption at free air flow. These values can be significantly higher in the operating point.

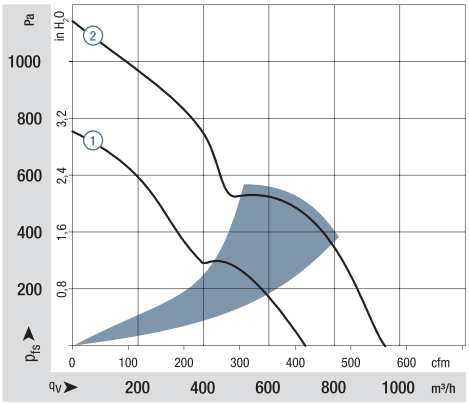


Air performance measured according to: ISO 5801.
Installation category A, without contact protection.
Noise: Total sound power level $L_{WA}$ ISO 10302 measured on a hemisphere with a radius of 2 m.
Sound pressure level $L_{pA}$ measured at 1 m distance from fan axis.
The values given are applicable only under the specified measuring conditions and may differ depending on the installation conditions.
In the event of deviation from the standard configuration, the parameters must be checked after installation!
For detailed information see
http://www.ebmpapst.com/general conditions

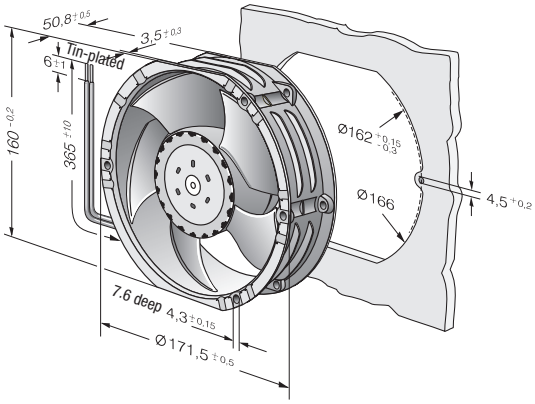




ebmpapst

Max. 685 m³/h

# S-Panther

# DC axial fans

Ø 172 x 51 mm



- **Material:** Housing: Die-cast aluminum
  Impeller: GRP[1] (PA)
- **Direction of air flow:** Exhaust over struts
- **Direction of rotation:** Counterclockwise, looking towards rotor
- **Connection:** (+) and GND AWG 20, UL 1007, TR 64; speed signal and alarm signal: AWG 22, UL 1007, TR 64
- **Highlights:** Highly efficient and smoothly operating 3-phase fan drive
  Housing with grounding lug for screw M4 x 8 (Torx)
- **Weight:** 850 g

1) Fiberglass-reinforced plastic

- **Possible special versions:**
  (See chapter DC fans - specials)
  - Speed signal
  - Go / NoGo alarm
  - Alarm with speed limit
  - External temperature sensor
  - Internal temperature sensor
  - PWM control input (standard)
  - Analog control input
  - Multi-option control input
  - Moisture protection
  - Salt spray protection
  - Degree of protection: IP 54 / IP 68

Series 6300 N
VWS0148PULCS

**Nominal data**

| Type | Air flow m³/h | Air flow cfm | **Nominal voltage** VDC | Voltage range VDC | Sound pressure level dB(A) | Sound power level Bel(A) | Sintec sleeve bearings □ / Ball bearings ■ | Power consumption Watts | Nominal speed rpm⁻¹ | Temperature range °C | Service life $L_{10}$ (40 °C) ebm-papst standard Hours | Service life $L_{10}$ ($T_{max}$) ebm-papst standard Hours | Life expectancy $L_{10IPC}$ (40 °C) see page 15 Hours | Curve |
|---|---|---|---|---|---|---|---|---|---|---|---|---|---|---|
| 6312 NM | 340 | 200 | **12** | 8…16 | - | 5.7 | ■ | 8 | 2500 | -20…+70 | 87 500 / 35 000 | | 147 500 | ② |
| 6312 NH | 470 | 277 | **12** | 8…16 | - | 6.5 | ■ | 24 | 3500 | -20…+70 | 82 500 / 32 500 | | 140 000 | ④ |
| 6314 NM | 340 | 200 | **24** | 16…32 | - | 5.7 | ■ | 8 | 2500 | -20…+70 | 87 500 / 35 000 | | 147 500 | ② |
| 6314 NN | 420 | 247 | **24** | 16…32 | - | 6.3 | ■ | 13 | 3000 | -20…+70 | 85 000 / 32 500 | | 142 500 | ③ |
| 6314 NH | 470 | 277 | **24** | 16…32 | - | 6.5 | ■ | 20 | 3500 | -20…+70 | 82 500 / 32 500 | | 140 000 | ④ |
| 6314 N/2 HHP | 540 | 318 | **24** | 16…32 | - | 6.9 | ■ | 32 | 4000 | -20…+70 | 80 000 / 40 000 | | 135 000 | ⑤ |
| 6318 NL | 200 | 118 | **48** | 36…60 | - | 4.4 | ■ | 3 | 1500 | -20…+70 | 90 000 / 35 000 | | 152 500 | ① |
| 6318 NM | 340 | 200 | **48** | 36…60 | - | 5.7 | ■ | 8 | 2500 | -20…+70 | 87 500 / 35 000 | | 147 500 | ② |
| 6318 N/2 HHP | 540 | 318 | **48** | 36…60 | - | 6.9 | ■ | 32 | 4000 | -20…+70 | 80 000 / 40 000 | | 135 000 | ⑤ |
| 6318 N/2 H3P | 685 | 403 | **48** | 36…60 | - | 7.5 | ■ | 53 | 5000 | -20…+70 | 77 500 / 40 000 | | 130 000 | ⑥ |

Subject to change

Speed control range from 1000 rpm⁻¹ up to maximum nominal speed. Standstill at 0 % PWM, maximum speed if control cable is interrupted.

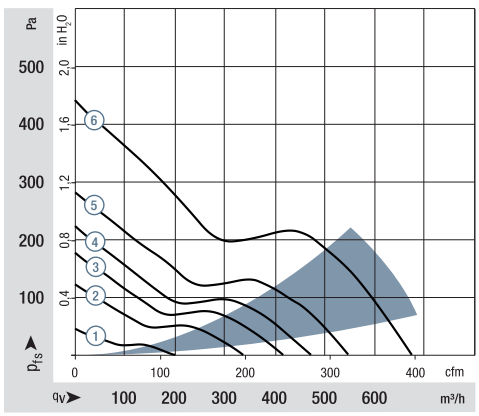


Air performance measured according to: ISO 5801.
Installation category A, without contact protection.
Noise: Total sound power level $L_{WA}$ ISO 10302 measured on a hemisphere with a radius of 2 m.
Sound pressure level $L_{pA}$ measured at 1 m distance from fan axis.
The values given are applicable only under the specified measuring conditions and may differ depending on the installation conditions.
In the event of deviation from the standard configuration, the parameters must be checked after installation!
For detailed information see
http://www.ebmpapst.com/general conditions

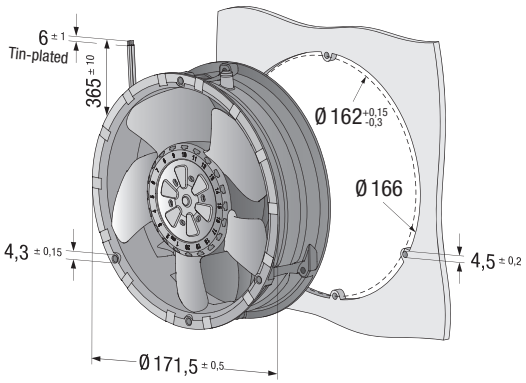

Max. 1210 m³/h

**S-Panther**

# DC axial fans

Ø 172 x 51 mm



- **Material:** Housing: Die-cast aluminum
  Impeller: GRP[1] (PA)
- **Direction of air flow:** Exhaust over struts
- **Direction of rotation:** Counterclockwise, looking towards rotor
- **Connection:** AWG 18, 20, UL 1007, TR 64; speed signal and control input: AWG 22, UL 1007, TR 64
- **Highlights:** Highly efficient and smoothly operating 3-phase fan drive
  Housing with grounding lug for screw M4 x 8 (Torx)
- **Weight:** 890 g

1) Fiberglass-reinforced plastic

- **Possible special versions:**
  (See chapter DC fans - specials)
  - Speed signal
  - Go / NoGo alarm
  - Alarm with speed limit
  - External temperature sensor
  - Internal temperature sensor
  - PWM control input (standard)
  - Analog control input
  - Multi-option control input
  - Moisture protection
  - Salt spray protection
  - Degree of protection: IP 54

Series 6300 NTD
VWS0148PULDS

**Nominal data**

| Type | Air flow | Air flow | Nominal voltage | Voltage range | Sound pressure level | Sound power level | Sintec sleeve bearings / Ball bearings | Power consumption* | Nominal speed | Temperature range | Service life $L_{10}$ (40 °C) ebm-papst standard / Service life $L_{10}$ ($T_{max}$) ebm-papst standard | Life expectancy $L_{10IPC}$ (40 °C) see page 15 | Curve |
|---|---|---|---|---|---|---|---|---|---|---|---|---|---|
| | m³/h | cfm | VDC | VDC | dB(A) | Bel(A) | □ / ■ | Watts | rpm⁻¹ | °C | Hours | Hours | |
| 6314 N/2 TDHHP | 990 | 583 | **24** | 16…36 | 75 | 8.3 | ■ | 156 | 7200 | -20…+70 | 62 500 / 32 500 | 105 000 | ② |
| 6318 N/2 TDHP | 805 | 473 | **48** | 36…60 | 71 | 7.8 | ■ | 95 | 6000 | -20…+70 | 75 000 / 37 500 | 127 500 | ① |
| 6318 N/2 TDH3P | 1030 | 606 | **48** | 36…72 | 76 | 8.4 | ■ | 160 | 7500 | -20…+70 | 60 000 / 30 000 | 102 500 | ③ |
| 6318 N/2 TDH4P | 1210 | 712 | **48** | 36…72 | 80 | 8.8 | ■ | 257 | 9000 | -20…+65 | 45 000 / 25 000 | 75 000 | ④ |

Subject to change

Speed control range from 1000 rpm⁻¹ up to maximum nominal speed.
Standstill at 0 % PWM, maximum speed if control cable is interrupted.
* Power consumption at free air flow. These values can be significantly higher in the operating point.

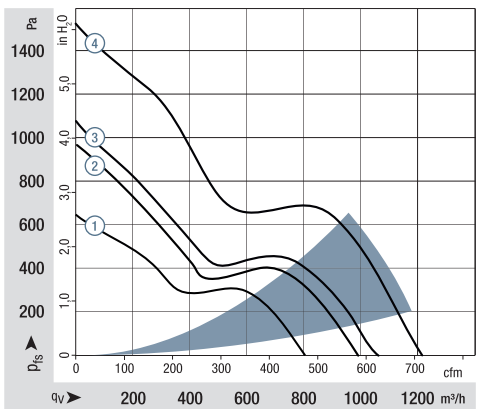


Air performance measured according to: ISO 5801.
Installation category A, without contact protection.
Noise: Total sound power level $L_{WA}$ ISO 10302 measured on a hemisphere with a radius of 2 m.
Sound pressure level $L_{pA}$ measured at 1 m distance from fan axis.
The values given are applicable only under the specified measuring conditions and may differ depending on the installation conditions.
In the event of deviation from the standard configuration, the parameters must be checked after installation!
For detailed information see
http://www.ebmpapst.com/general conditions

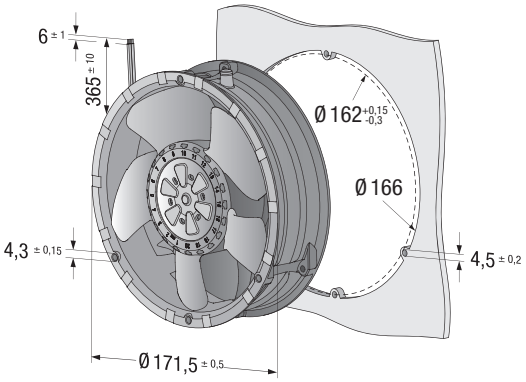




ebmpapst

Max. 545 m³/h

S-Force

# DC axial fans

## Ø 172 x 51 mm



- **Material:** Housing: Die-cast aluminum
  Impeller: GRP[1] (PA)
- **Direction of air flow:** Exhaust over struts
- **Direction of rotation:** Counterclockwise, looking towards rotor
- **Connection:** Via single wires AWG 22, TR 64
- **Highlights:** Housing with grounding lug for screw M4 x 8 (Torx)
- **Weight:** 825 g

- **Possible special versions:**
  (See chapter DC fans - specials)
  - Speed signal
  - Go / NoGo alarm
  - Alarm with speed limit
  - External temperature sensor
  - Internal temperature sensor
  - PWM control input (standard)
  - Analog control input
  - Moisture protection
  - Salt spray protection
  - Degree of protection: IP 54

1) Fiberglass-reinforced plastic

| Series 6300<br>VWS0148XULCS<br>**Nominal data** | Air flow | Air flow | **Nominal voltage** | Voltage range | Sound pressure level | Sound power level | Sintec sleeve bearings<br>Ball bearings | Power consumption* | Nominal speed | Temperature range | Service life $L_{10}$ (40 °C) ebm-papst standard<br>Service life $L_{10}$ ($T_{max}$) ebm-papst standard | Life expectancy $L_{10IPC}$ (40 °C) see page 15 | Curve |
|---|---|---|---|---|---|---|---|---|---|---|---|---|---|
| **Type** | **m³/h** | **cfm** | **VDC** | **VDC** | **dB(A)** | **Bel(A)** | □ / ■ | **Watts** | **rpm⁻¹** | **°C** | **Hours** | **Hours** | |
| 6312/2 MP-204 | 360 | 211 | **12** | 8...16 | 49 | 5.8 | ■ | 15 | 3 500 | -20...+65 | 82 500 / 47 500 | 140 000 | ① |
| 6314/2 MP | 395 | 232 | **24** | 16...30 | 51 | 6.0 | ■ | 14 | 3 700 | -20...+75 | 82 500 / 32 500 | 140 000 | ① |
| 6314/2 NP | 470 | 276 | **24** | 16...30 | 56 | 6.5 | ■ | 23 | 4 400 | -20...+70 | 80 000 / 40 000 | 135 000 | ② |
| 6314/2 HP | 545 | 320 | **24** | 16...30 | 58 | 6.9 | ■ | 31 | 5 000 | -20...+65 | 77 500 / 42 500 | 130 000 | ③ |
| 6318/2 HP | 545 | 320 | **48** | 36...72 | 58 | 6.9 | ■ | 32 | 5 000 | -20...+65 | 77 500 / 42 500 | 130 000 | ③ |

Subject to change

Speed control range from 700 rpm⁻¹ up to maximum nominal speed. Standstill at 0 % PWM, maximum speed if control cable is interrupted.
* Power consumption at free air flow. These values can be significantly higher in the operating point.

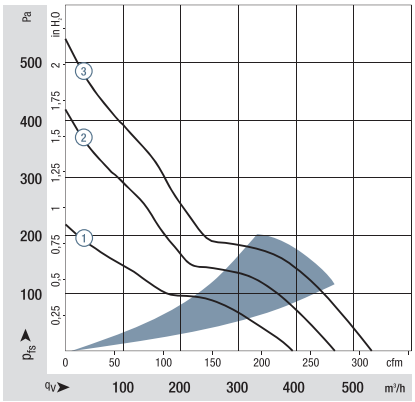


Air performance measured according to: ISO 5801.
Installation category A, without contact protection.
Noise: Total sound power level LwA ISO 10302 measured on a hemisphere with a radius of 2 m.
Sound pressure level LpA measured at 1 m distance from fan axis.
The values given are applicable only under the specified measuring conditions and may differ depending on the installation conditions.
In the event of deviation from the standard configuration, the parameters must be checked after installation!
For detailed information see
http://www.ebmpapst.com/general conditions

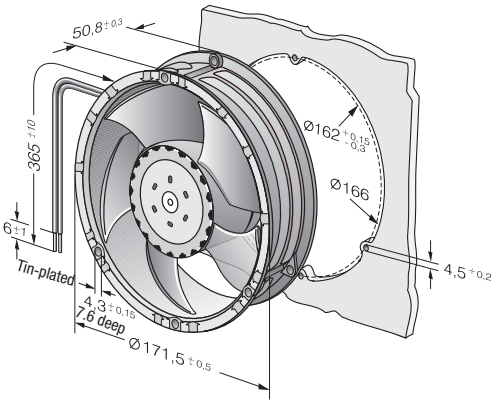

Max. 930 m³/h

S-Force

# DC axial fans

## Ø 172 x 51 mm



- **Material:** Housing: Die-cast aluminum
  Impeller: GRP[1] (PA)
- **Direction of air flow:** Exhaust over struts
- **Direction of rotation:** Counterclockwise, looking towards rotor
- **Connection:** Via single wires AWG 18, 20 or AWG 22, TR 64, speed signal and control input AWG 22
- **Highlights:** Highly efficient and smoothly operating 3-phase fan drive
  Housing with grounding lug for screw M4 x 8 (Torx)
- **Weight:** 910 g

1) Fiberglass-reinforced plastic

- **Possible special versions:**
  (See chapter DC fans - specials)
  - Speed signal
  - Go / NoGo alarm
  - Alarm with speed limit
  - External temperature sensor
  - Internal temperature sensor
  - PWM control input (standard)
  - Analog control input
  - Multi-option control input
  - Moisture protection
  - Salt spray protection
  - Degree of protection: IP 54

Series 6300 TD
VWS0148XULDS

**Nominal data**

| Type | Air flow m³/h | Air flow cfm | Nominal voltage VDC | Voltage range VDC | Sound pressure level dB(A) | Sound power level Bel(A) | Sintec sleeve bearings □ / Ball bearings ■ | Power consumption* Watts | Nominal speed rpm⁻¹ | Temperature range °C | Service life $L_{10}$ (40 °C) ebm-papst standard Hours | Service life $L_{10}$ ($T_{max}$) ebm-papst standard Hours | Life expectancy $L_{10IPC}$ (40 °C) see page 15 Hours | Curve |
|---|---|---|---|---|---|---|---|---|---|---|---|---|---|---|
| 6312/2 TDHP | 600 | 353 | **12** | 8...16 | 60 | 7.3 | ■ | 40 | 5 500 | -20...+70 | 75 000 / 37 500 | | 127 500 | ② |
| 6314/2 TDHP-298 | 600 | 353 | **24** | 16...30 | 60 | 7.3 | ■ | 42 | 5 500 | -20...+65 | 75 000 / 42 500 | | 127 500 | ① |
| 6314/2 TDHP | 600 | 353 | **24** | 16...36 | 60 | 7.3 | ■ | 40 | 5 500 | -20...+75 | 75 000 / 30 000 | | 127 500 | ② |
| 6314/2 TDHHP | 710 | 418 | **24** | 16...36 | 69 | 7.9 | ■ | 67 | 7 000 | -20...+75 | 62 500 / 25 000 | | 105 000 | ③ |
| 6314/2 TDH4P | 930 | 545 | **24** | 16...36 | 75 | 8.4 | ■ | 150 | 9 200 | -20...+75 | 52 500 / 20 000 | | 87 500 | ④ |
| 6318/2 TDHP-299 | 600 | 353 | **48** | 36...60 | 60 | 7.3 | ■ | 42 | 5 500 | -20...+65 | 75 000 / 42 500 | | 127 500 | ① |
| 6318/2 TDHP | 600 | 353 | **48** | 36...72 | 60 | 7.3 | ■ | 40 | 5 500 | -20...+75 | 75 000 / 30 000 | | 127 500 | ② |
| 6318/2 TDHHP | 710 | 418 | **48** | 36...72 | 69 | 7.9 | ■ | 67 | 7 000 | -20...+75 | 62 500 / 25 000 | | 105 000 | ③ |
| 6318/2 TDH4P | 930 | 545 | **48** | 36...72 | 75 | 8.4 | ■ | 150 | 9 200 | -20...+75 | 52 500 / 20 000 | | 87 500 | ⑤ |

Subject to change

Speed control range from 1000 rpm⁻¹ up to maximum nominal speed.
Standstill at 0 % PWM, maximum speed if control cable is interrupted.
* Power consumption at free air flow. These values can be significantly higher in the operating point.

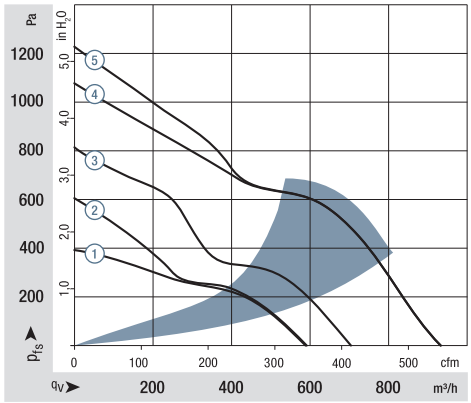


*** Power consumption – in operation**

| Fan type | optimum operating range (W) |
|---|---|
| 6318/2 TDHHP | 115 |
| 6318/2 TDH4P | 270 |

Air performance measured according to: ISO 5801.
Installation category A, without contact protection.
Noise: Total sound power level LwA ISO 10302 measured on a hemisphere with a radius of 2 m.
Sound pressure level LpA measured at 1 m distance from fan axis.
The values given are applicable only under the specified measuring conditions and may differ depending on the installation conditions.
In the event of deviation from the standard configuration, the parameters must be checked after installation!
For detailed information see
http://www.ebmpapst.com/general conditions

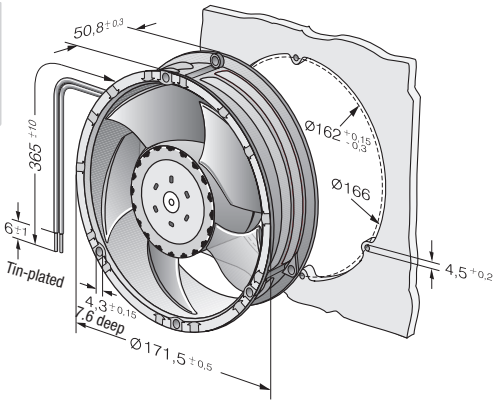




Finger guards from p. 254

ebmpapst

Max. 1100 m³/h

S-Force

# DC diagonal fan

Ø 172 x 51 mm



- **Material:** Housing: Die-cast aluminum
  Impeller: GRP[1] (PA)
- **Direction of air flow:** Exhaust over struts
- **Direction of rotation:** Counterclockwise, looking towards rotor
- **Connection:** (+) and GND: AWG 18, UL 1007, TR 64; speed and alarm signal: AWG 22, UL 1007, TR 64
- **Highlights:** Highly efficient and smoothly operating 3-phase fan drive
  Housing with grounding lugfor screw M4 x 8 (Torx)
- **Weight:** 1050 g

1) Fiberglass-reinforced plastic

- **Possible special versions:**
  (See chapter DC fans - specials)
  - Speed signal
  - Go / NoGo alarm
  - Alarm with speed limit
  - External temperature sensor
  - Internal temperature sensor
  - PWM control input (standard)
  - Analog control input
  - Multi-option control input
  - Moisture protection
  - Salt spray protection
  - Degree of protection: IP 54

Series DV 6300 TD
VKS0168XULDS

**Nominal data**

| Type | Air flow m³/h | Air flow cfm | Nominal voltage VDC | Voltage range VDC | Sound pressure level dB(A) | Sound power level Bel(A) | Sintec sleeve bearings □ / Ball bearings ■ | Power consumption Watts | Nominal speed rpm⁻¹ | Temperature range °C | Service life $L_{10}$ (40 °C) ebm-papst standard Hours | Service life $L_{10}$ ($T_{max}$) ebm-papst standard Hours | Life expectancy $L_{10IPC}$ (40 °C) see page 15 Hours | Curve |
|---|---|---|---|---|---|---|---|---|---|---|---|---|---|---|
| DV 6314/2 TDHHP | 730 | 429 | **24** | 16…36 | 72 | 8.0 | ■ | 118 | 4850 | -20…+60 | 75 000 / 47 000 | | 127 500 | ② |
| DV 6318/2 TDHP* | 630 | 371 | **48** | 36…72 | 68 | 7.6 | ■ | 75 | 4000 | -20…+65 | 70 000 / 40 000 | | 117 500 | ① |
| DV 6318/2 TDHHP* | 730 | 429 | **48** | 36…72 | 72 | 8.0 | ■ | 118 | 4850 | -20…+65 | 60 000 / 32 500 | | 102 500 | ② |
| DV 6318/2 TDH4P | 1050 | 617 | **48** | 36…72 | 77 | 8.7 | ■ | 300 | 6500 | -20…+65 | 50 000 / 27 500 | | 85 000 | ③ |
| DV 6318/2 TDH5P** | 1100 | 647 | **48** | 36…72 | 79 | 8.9 | ■ | 360 | 6800 | -20…+65 | 40 000 / 22 500 | | 67 500 | ④ |

Subject to change

* On request
** Rotor protrusion a = 3 mm

Speed control range from 1000 rpm⁻¹ up to maximum nominal speed. Standstill at 0 % PWM, maximum speed if control cable is interrupted.
The fan has an acceleration of up to 30% that produces a smoother curve.

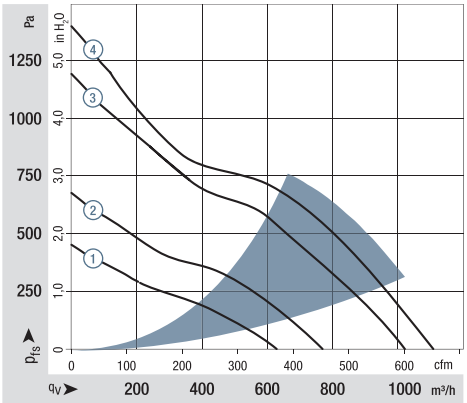


Air performance measured according to: ISO 5801.
Installation category A, without contact protection.
Noise: Total sound power level LwA ISO 10302 measured on a hemisphere with a radius of 2 m.
Sound pressure level LpA measured at 1 m distance from fan axis.
The values given are applicable only under the specified measuring conditions and may differ depending on the installation conditions.
In the event of deviation from the standard configuration, the parameters must be checked after installation!
For detailed information see
http://www.ebmpapst.com/general conditions

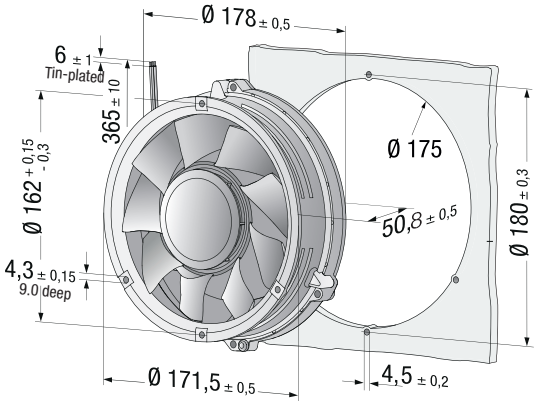

Max. 1220 m³/h

S-Force

# DC axial fans

220 x 200 x 51 mm



- **Material:** Housing: Die-cast aluminum
  Impeller: GRP[1] (PA)
- **Direction of air flow:** Exhaust over struts
- **Direction of rotation:** Counterclockwise, looking towards rotor
- **Connection:** Via single wires AWG 18, 20 or AWG 22, TR 64, speed signal and control input AWG 22
- **Highlights:** Highly efficient and smoothly operating 3-phase fan drive
  Housing with grounding lug for screw M4 x 8 (Torx)
- **Weight:** 1000 g

1) Fiberglass-reinforced plastic

- **Possible special versions:**
  (See chapter DC fans - specials)
  - Speed signal
  - Go / NoGo alarm
  - Alarm with speed limit
  - External temperature sensor
  - Internal temperature sensor
  - PWM control input
  - Analog control input
  - Multi-option control input
  - Moisture protection
  - Salt spray protection
  - Degree of protection: IP 54 / IP 68

Series 2200 FTD
VWS0184FULDS
VWS0184FULCS

**Nominal data**

| Type | Air flow m³/h | Air flow cfm | Nominal voltage VDC | Voltage range VDC | Sound pressure level dB(A) | Sound power level Bel(A) | Sintec sleeve bearings □ / Ball bearings ■ | Power consumption* Watts | Nominal speed rpm⁻¹ | Temperature range °C | Service life $L_{10}$ (40 °C) ebm-papst standard / Service life $L_{10}$ ($T_{max}$) ebm-papst standard Hours | Life expectancy $L_{10IPC}$ (40 °C) see page 15 Hours | Curve |
|---|---|---|---|---|---|---|---|---|---|---|---|---|---|
| 2214 F/2 TDHO | 790 | 465 | **24** | 16...30 | 62 | 7.1 | ■ | 35 | 4250 | -20...+75 | 90 000 / 42 500 | 152 500 | ① |
| 2214 F/2 TDHHO | 940 | 553 | **24** | 16...36 | 66 | 7.4 | ■ | 48 | 5000 | -20...+70 | 85 000 / 42 500 | 142 500 | ② |
| 2218 F/2 TDHO | 790 | 465 | **48** | 36...57 | 62 | 7.1 | ■ | 35 | 4250 | -20...+75 | 90 000 / 42 500 | 152 500 | ① |
| 2218 F/2 TDHHO | 940 | 553 | **48** | 36...72 | 66 | 7.4 | ■ | 48 | 5000 | -20...+70 | 85 000 / 42 500 | 142 500 | ② |
| 2218 F/2 TDH4P | 1220 | 718 | **48** | 36...72 | 72 | 8.2 | ■ | 103 | 6500 | -20...+65 | 70 000 / 40 000 | 117 500 | ③ |

Subject to change

Speed control range from 1000 rpm⁻¹ up to maximum nominal speed.
Standstill at 0 % PWM, Type O: standstill if control wire is interrupted; Type P: maximum speed if control wire is interrupted.
* Power consumption at free air flow. These values can be significantly higher in the operating point.

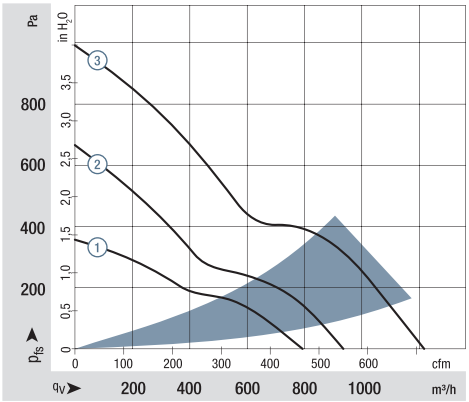


Air performance measured according to: ISO 5801.
Installation category A, without contact protection.
Noise: Total sound power level $L_{WA}$ ISO 10302 measured on a hemisphere with a radius of 2 m.
Sound pressure level $L_{pA}$ measured at 1 m distance from fan axis.
The values given are applicable only under the specified measuring conditions and may differ depending on the installation conditions.
In the event of deviation from the standard configuration, the parameters must be checked after installation!
For detailed information see
http://www.ebmpapst.com/general conditions

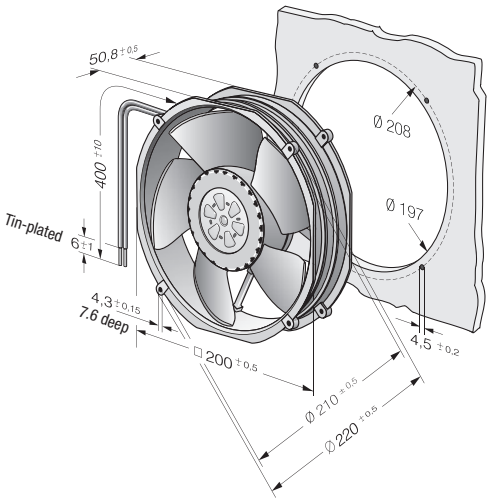




Finger guards
from p. 254

ebmpapst

max. 1000 m³/h

# DC axial fans

☐ 225 x 80 mm



- **Material:** Fan housing: Die-cast aluminum
  Impeller: GRP[1)]
- **Direction of air flow:** Exhaust over struts
- **Direction of rotation:** Counterclockwise, looking towards rotor
- **Connection:** Via terminal strip
- **Highlights:** 3-phase fan drive with very smooth operation
  Electrical commutation completely integrated
- **Weight:** 2.1 kg

1) Fiberglass-reinforced plastic

- **Possible special versions:**
  (See chapter DC fans - specials)
  - Speed signal
  - Go / NoGo alarm
  - Alarm with speed limit
  - External temperature sensor
  - Internal temperature sensor
  - PWM control input
  - Analog control input
  - Multi-option control input
  - Moisture protection
  - Degree of protection: IP 54

Series 2200 TD
VWS0196XULCS

**Nominal data**

| Type | Air flow m³/h | Air flow cfm | **Nominal voltage VDC** | Voltage range VDC | Sound pressure level dB(A) | Sound power level Bel(A) | Sintec sleeve bearings / Ball bearings □ / ■ | Power consumption Watts | Nominal speed rpm⁻¹ | Temperature range °C | Service life $L_{10}$ (40 °C) ebm-papst standard / Service life $L_{10}$ ($T_{max}$) ebm-papst standard Hours | Life expectancy $L_{10IPC}$ (40 °C) see page 15 Hours | Curve |
|---|---|---|---|---|---|---|---|---|---|---|---|---|---|
| 2214/2 TDO | 1000 | 588 | **24** | 16...30 | 59 | 6.8 | ■ | 50 | 3 000 | -20...+60 | 80 000 / 50 000 | 135 000 | ① |
| 2218/2 TDO | 1000 | 588 | **48** | 36...57 | 59 | 6.8 | ■ | 50 | 3 000 | -20...+60 | 80 000 / 50 000 | 135 000 | ① |

Subject to change

* Power consumption at free air flow. These values can be significantly higher in the operating point.

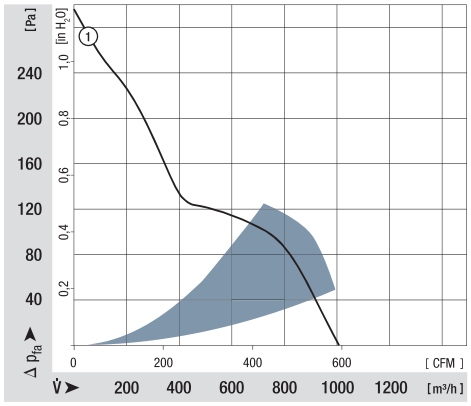


Air performance measured according to: ISO 5801.
Installation category A, without contact protection.
Noise: Total sound power level $L_{WA}$ ISO 10302 measured on a hemisphere with a radius of 2 m.
Sound pressure level $L_{pA}$ measured at 1 m distance from fan axis.
The values given are applicable only under the specified measuring conditions and may differ depending on the installation conditions.
In the event of deviation from the standard configuration, the parameters must be checked after installation!
For detailed information see
http://www.ebmpapst.com/general conditions

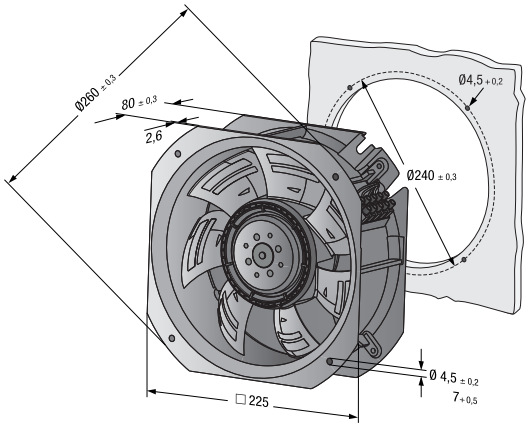

Max. 1245 m³/h

# DC diagonal module

☐ 225 x 80 mm



- **Material:** Housing and support bracket: Fiberglass-reinforced plastic (PA6)
  Impeller: Fiberglass-reinforced plastic (PA6)
  Rotor: Painted black
- **Number of blades:** 7
- **Direction of air flow:** "V"
- **Direction of rotation:** Clockwise, looking towards rotor
- **Degree of protection:** Ⓐ Ⓒ IP 44, Ⓑ Ⓓ IP 20, depending on installation and position
- **Insulation class:** "B"
- **Installation position:** Any
- **Condensation drainage holes:** Ⓐ Ⓒ none, Ⓑ Ⓓ seen on rotor
- **Mode of operation:** Continuous operation (S1)
- **Bearings:** Maintenance-free ball bearings

VJH0200XUNCS

**Nominal data**

| Type | Motor | Curve | Nominal voltage | Nominal voltage range | Air flow | Nominal speed | Power consumption | Input current | Sound power level | Admissible amb. temp. | Weight | Technical features and connection diagram |
|---|---|---|---|---|---|---|---|---|---|---|---|---|
| | | | VDC | VDC | m³/h | rpm⁻¹ | W | A | dB(A) | °C | kg | |
| K1G 200-AD65-04 | M1G 074-BF | Ⓐ | 24 | 16...28 | 1020 | 3 400 | 95 | 4.7 | 76 | -25...+60 | 1.8 | p. 277 / J5) |
| K1G 200-AD31-02 | M1G 074-BF | Ⓑ | 24 | 16...28 | 1045 | 3 500 | 110 | 5.4 | 77 | -25...+70 | 1.7 | p. 277 / J5) |
| K1G 200-AD49-04 | M1G 074-BF | Ⓒ | 48 | 36...57 | 1095 | 3 650 | 120 | 3.4 | 77 | -25...+60 | 1.8 | p. 277 / J5) |
| K1G 200-AD37-02 | M1G 074-BF | Ⓓ | 48 | 36...57 | 1245 | 4 140 | 183 | 5.6 | 81 | -25...+70 | 1.7 | p. 277 / J5) |

Subject to change

**Curves:**

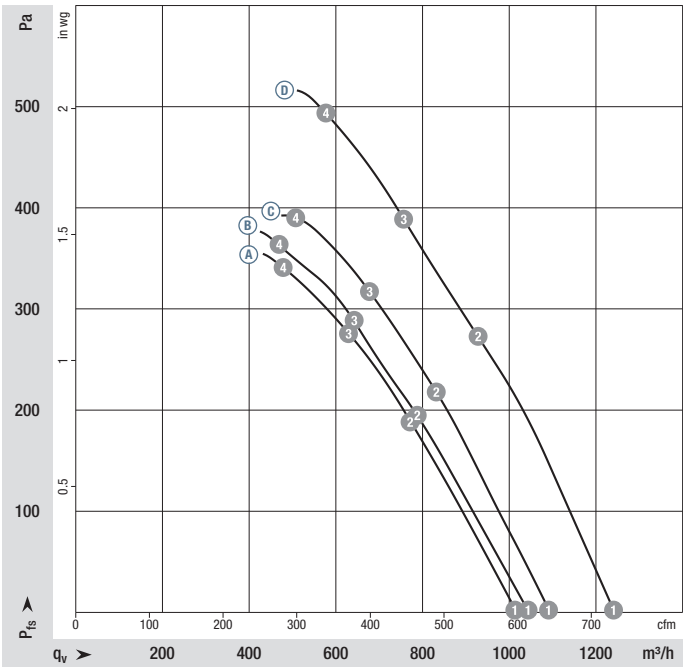


| | | n rpm⁻¹ | $P_{ed}$ W | I A | $L_WA$ dB(A) |
|---|---|---|---|---|---|
| Ⓐ | 1 | 3400 | 95 | 4.70 | 76 |
| Ⓐ | 2 | 3410 | 116 | 5.61 | 74 |
| Ⓐ | 3 | 3410 | 119 | 5.75 | 74 |
| Ⓐ | 4 | 3410 | 117 | 5.62 | 76 |
| Ⓑ | 1 | 3500 | 110 | 5.40 | 77 |
| Ⓑ | 2 | 3510 | 127 | 6.24 | 75 |
| Ⓑ | 3 | 3510 | 129 | 6.31 | 75 |
| Ⓑ | 4 | 3510 | 125 | 6.15 | 76 |
| Ⓒ | 1 | 3650 | 120 | 3.40 | 77 |
| Ⓒ | 2 | 3645 | 141 | 3.90 | 75 |
| Ⓒ | 3 | 3640 | 145 | 3.99 | 76 |
| Ⓒ | 4 | 3645 | 141 | 3.88 | 80 |
| Ⓓ | 1 | 4140 | 183 | 5.60 | 81 |
| Ⓓ | 2 | 4080 | 212 | 6.46 | 79 |
| Ⓓ | 3 | 4060 | 213 | 6.52 | 79 |
| Ⓓ | 4 | 4105 | 211 | 6.43 | 80 |

Air performance measured according to: ISO 5801. Installation category A, without contact protection. Suction-side noise levels: LWA according to ISO 13347, LpA measured at 1 m distance from fan axis. The values given are applicable only under the specified measuring conditions and may differ depending on the installation conditions. In the event of deviation from the standard configuration, the parameters must be checked after installation! For detailed information see http://www.ebmpapst.com/general conditions



ebmpapst

- **Technical features:** See connection diagram p. 277
- **EMC:** Immunity to interference according to EN 61000-6-2 (industrial environment)
  Interference emission according to EN 55022 (Class B)
- **Cable exit:** Lateral
- **Protection class:** I (with customer connection to grounding conductor)
- **Conformity with standard(s):** EN 60335-1
- **Approvals** Ⓐ Ⓒ UL 1004-1, CSA C22.2 no. 77
  Ⓑ Ⓓ EAC, UL 1004-1, CSA C22.2 no. 77

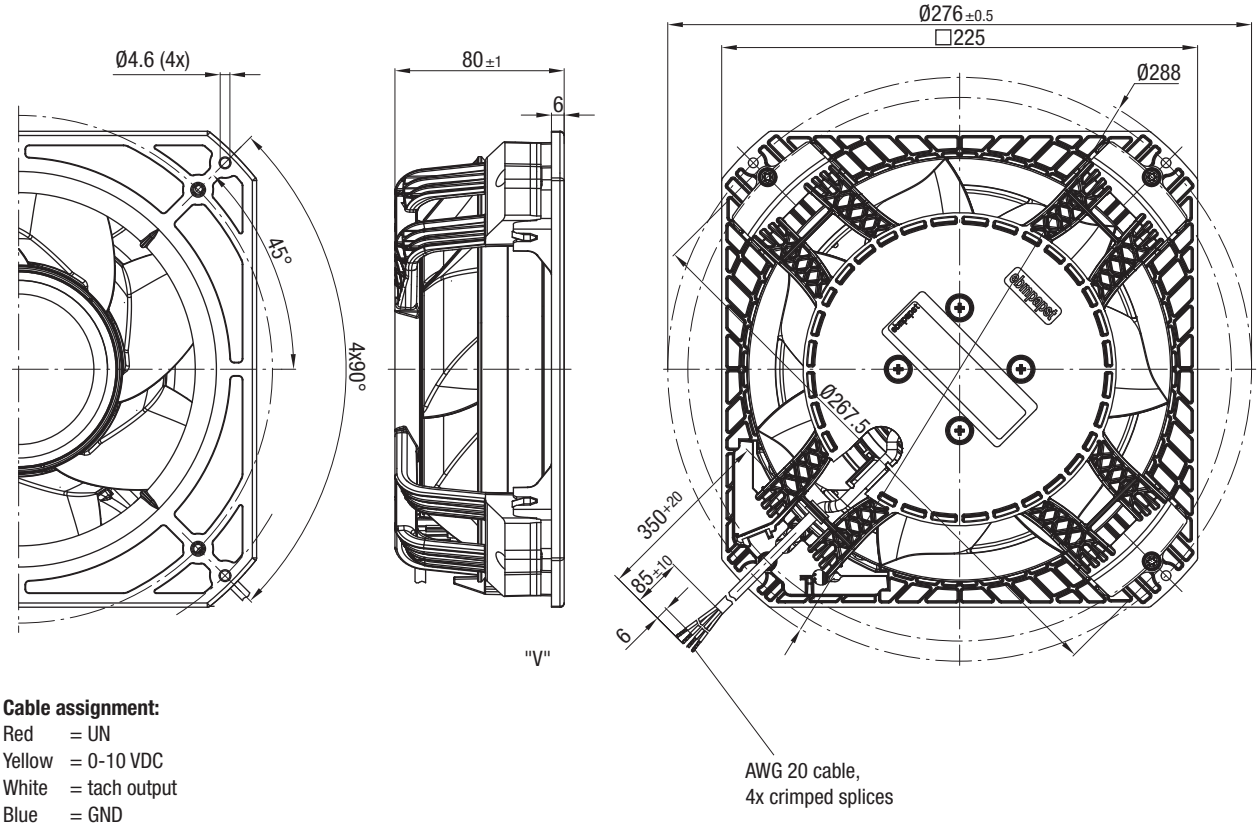


**Cable assignment:**
Red = UN
Yellow = 0-10 VDC
White = tach output
Blue = GND

Max. 1650 m³/h

# DC diagonal module

☐ 225 x 89 mm



- **Material:** Housing and support bracket: Plastic (PA)<br>Impeller: Plastic (PA)<br>Rotor: Painted black
- **Number of blades:** 7
- **Direction of air flow:** "V"
- **Direction of rotation:** Clockwise, looking towards rotor
- **Degree of protection:** Ⓐ Ⓒ IP 44, Ⓑ Ⓓ IP 20, depending on installation and position
- **Insulation class:** "B"
- **Installation position:** Any
- **Condensation drainage holes:** Ⓐ Ⓒ none, Ⓑ Ⓓ seen on rotor
- **Mode of operation:** Continuous operation (S1)
- **Bearings:** Maintenance-free ball bearings

VJH0200XUNES

**Nominal data**

| Type | Motor | Curve | Nominal voltage | Nominal voltage range | Air flow | Nominal speed | Power consumption | Input current | Sound power level | Admissible amb. temp. | Weight | Technical features and connection diagram |
|---|---|---|---|---|---|---|---|---|---|---|---|---|
| | | | VDC | VDC | m³/h | rpm⁻¹ | W | A | dB(A) | °C | kg | |
| K3G 200-BD46-04 | M3G 074-CF | Ⓐ | 24 | 16...28 | 1240 | 4120 | 170 | 7.0 | 80 | -25...+60 | 2.3 | p. 277 / J5) |
| K3G 200-BD44-02 | M3G 074-CF | Ⓑ | 24 | 16...28 | 1445 | 4830 | 275 | 11.5 | 84 | -25...+60 | 2.3 | p. 277 / J5) |
| K3G 200-BD64-04 | M3G 074-CF | Ⓒ | 48 | 36...57 | 1475 | 4875 | 275 | 5.8 | 85 | -25...+60 | 2.3 | p. 277 / J5) |
| K3G 200-BDA8-02 | M3G 074-CF | Ⓓ | 48 | 36...57 | 1650 | 5470 | 400 | 8.4 | 88 | -25...+60 | 2.3 | p. 277 / J5) |

Subject to change

**Curves:**

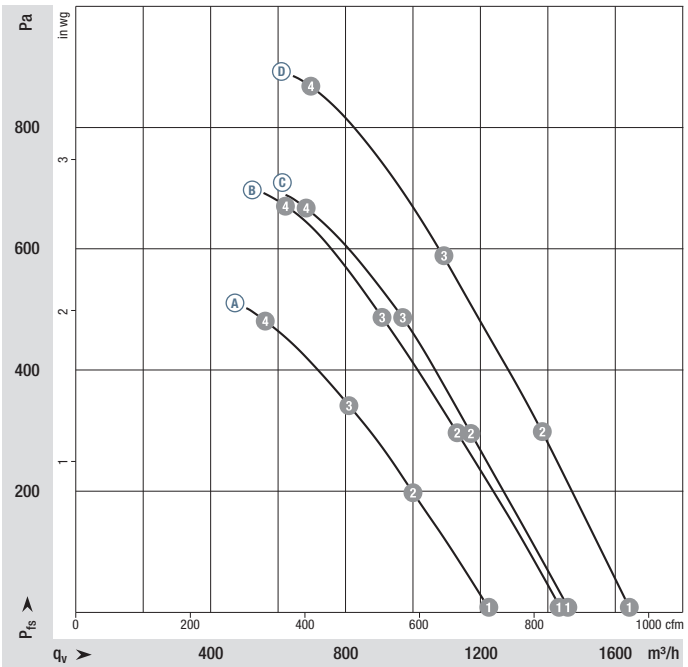


| | n rpm⁻¹ | $P_{ed}$ W | I A | $L_WA$ dB(A) |
|---|---|---|---|---|
| Ⓐ 1 | 4120 | 170 | 7.00* | 80 |
| Ⓐ 2 | 4025 | 180 | 7.52* | 77 |
| Ⓐ 3 | 4005 | 187 | 7.80* | 76 |
| Ⓐ 4 | 4045 | 187 | 7.78* | 78 |
| Ⓑ 1 | 4830 | 275 | 11.50* | 84 |
| Ⓑ 2 | 4720 | 294 | 12.24* | 81 |
| Ⓑ 3 | 4685 | 299 | 12.48* | 80 |
| Ⓑ 4 | 4715 | 295 | 12.30* | 83 |
| Ⓒ 1 | 4875 | 275 | 5.80* | 85 |
| Ⓒ 2 | 4795 | 300 | 6.27* | 81 |
| Ⓒ 3 | 4755 | 307 | 6.41* | 80 |
| Ⓒ 4 | 4780 | 304 | 6.35* | 82 |
| Ⓓ 1 | 5470 | 400 | 8.40* | 88 |
| Ⓓ 2 | 5365 | 426 | 8.89* | 85 |
| Ⓓ 3 | 5310 | 438 | 9.17* | 83 |
| Ⓓ 4 | 5355 | 431 | 9.01* | 87 |

* Current measured at nominal voltage.

Air performance measured according to: ISO 5801. Installation category A, without contact protection. Suction-side noise levels: LWA according to ISO 13347, LpA measured at 1 m distance from fan axis. The values given are applicable only under the specified measuring conditions and may differ depending on the installation conditions. In the event of deviation from the standard configuration, the parameters must be checked after installation! For detailed information see http://www.ebmpapst.com/general conditions



ebmpapst

- **Technical features:** See connection diagram p. 277
- **EMC (48 V):** Immunity to interference according to EN 61000-6-2 (industrial environment)
  Interference emission according to EN 55022 (Class B, household environment)
- **Cable exit:** Lateral
- **Conformity with standard(s):** EN 60335-1
- **Approvals:** (24 V) EAC
  (48 V) EAC, CCC

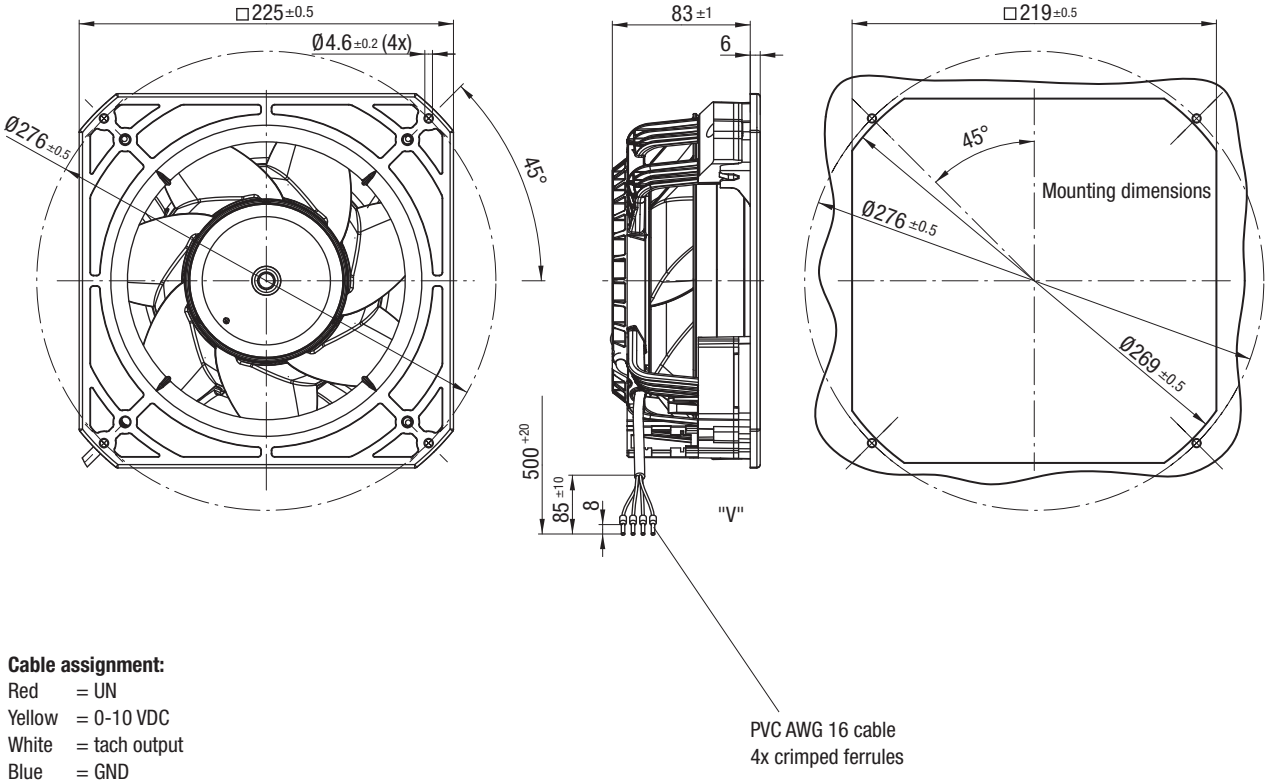


**Cable assignment:**
Red = UN
Yellow = 0-10 VDC
White = tach output
Blue = GND

PVC AWG 16 cable
4x crimped ferrules

Max. 2070 m³/h

# DC axial fans

## Ø 250 mm



- **Material:** Fan housing: Die-cast aluminum<br>Blades: Plastic (PP)<br>Rotor: Thick-film passivated
- **Number of blades:** 7
- **Direction of air flow:** "V"
- **Direction of rotation:** Counterclockwise, looking towards rotor
- **Insulation class:** "B"
- **Installation position:** Any
- **Condensation drainage holes:** On rotor side
- **Mode of operation:** Continuous operation (S1)
- **Bearings:** Maintenance-free ball bearings

VWT250XUNCS

**Nominal data**

| Type | Motor | Curve | Nominal voltage | Nominal voltage range | Air flow | Nominal speed | Power consumption | Input current | Max. back-pressure | Admissible amb. temp. | Technical features and connection diagram |
|---|---|---|---|---|---|---|---|---|---|---|---|
| | | | VDC | VDC | m³/h | rpm⁻¹ | W | A | Pa | °C | |
| **W1G250-HJ87 -02** | M1G074-BF | Ⓐ | 24 | 16-28 | 2070 | 3090 | 120 | 7.00 | 150 | -25...+60 | p. 273 / E) |
| **W1G250-HJ20 -02** | M1G074-BF | Ⓑ | 48 | 36-57 | 2070 | 3100 | 130 | 3.80 | 140 | -25...+60 | p. 273 / E) |

Subject to change

**Curves:**

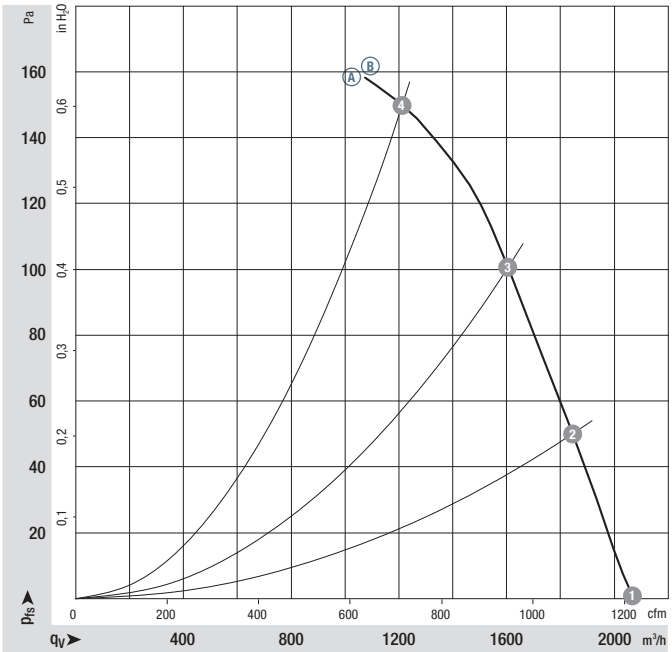


| | | n rpm⁻¹ | $P_{ed}$ W | I A | $L_WA$ dB(A) |
|---|---|---|---|---|---|
| Ⓐ | 1 | 3090 | 120 | 6.80 | 74 |
| Ⓐ | 2 | 2950 | 124 | 7.10 | 73 |
| Ⓐ | 3 | 2820 | 127 | 7.43 | 73 |
| Ⓐ | 4 | 2730 | 130 | 7.80 | 78 |
| Ⓑ | 1 | 3100 | 130 | 3.80 | 74 |
| Ⓑ | 2 | 2945 | 133 | 4.10 | 73 |
| Ⓑ | 3 | 2810 | 135 | 4.20 | 73 |
| Ⓑ | 4 | 2720 | 136 | 4.20 | 78 |

Air performance measured according to: ISO 5801. Installation category A, without contact protection. Suction-side noise levels: LWA according to ISO 13347, $L_pA$ measured at 1 m distance from fan axis. The values given are applicable only under the specified measuring conditions and may differ depending on the installation conditions. In the event of deviation from the standard configuration, the parameters must be checked after installation! For detailed information see http://www.ebmpapst.com/general conditions



ebmpapst

- **Technical features:** See connection diagram p. 273
- **EMC:** Interference emission acc. to EN 55022 (Class B)
  Immunity to interference acc. to EN 61000-6-2 (industrial environment)
- **Electrical hookup:** Via terminal strip
- **Protection class:** I
- **Conformity with standard(s):** EN 60950-1

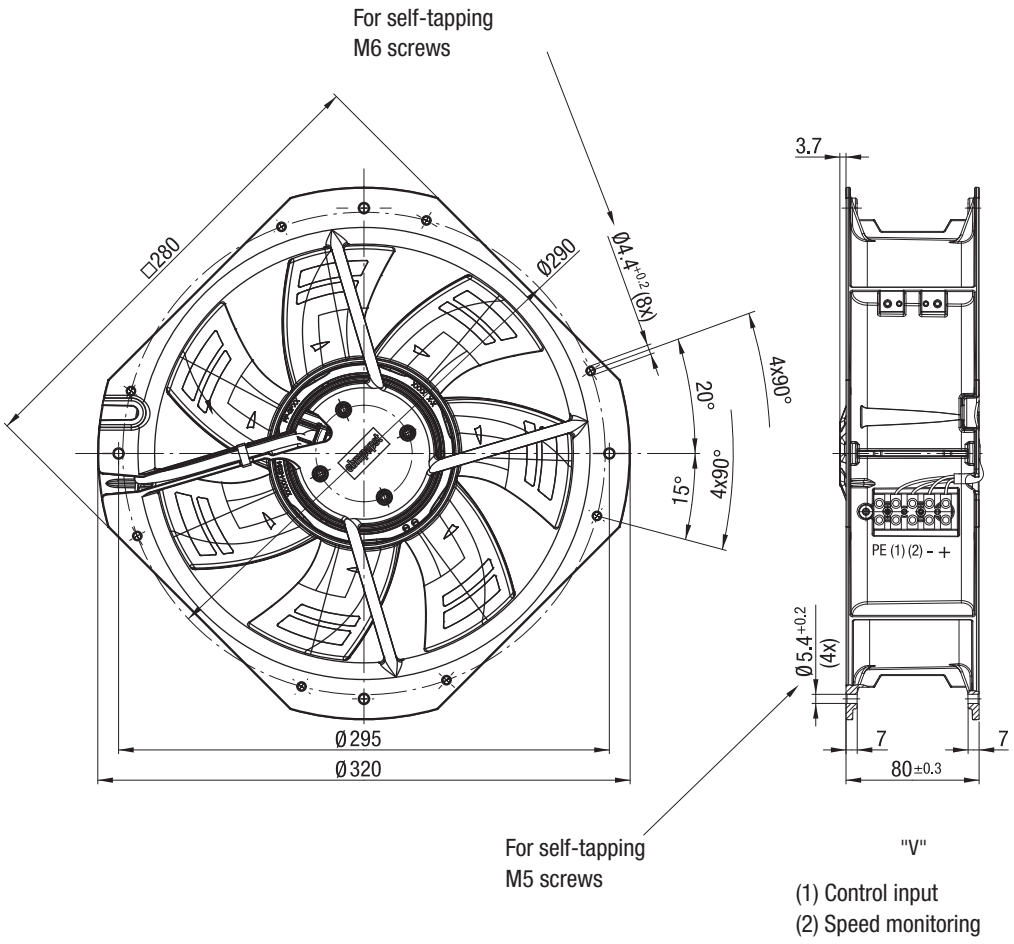

Max. 2345 m³/h

# DC axial fans – HyBlade®

## Ø 300 mm



- **Material:** Finger guard: Steel, phosphated and coated in black plastic
  Fan housing: Sheet steel, pre-galvanized and coated in black plastic
  Blades: Plastic (PP)
  Rotor: Painted black
- **Number of blades:** 5
- **Direction of air flow:** "V"
- **Direction of rotation:** Counterclockwise, looking towards rotor
- **Degree of protection:** IP 42
- **Insulation class:** "B"
- **Installation position:** Any
- **Condensation drainage holes:** None
- **Mode of operation:** Continuous operation (S1)
- **Bearings:** Maintenance-free ball bearings

VVY0300XUNES
VWR0300XUNES
VMA0300XUNES

**Nominal data**

| Type | Motor | Curve | Nominal voltage | Nominal voltage range | Air flow | Nominal speed | Power consumption | Input current | Max. back-pressure | Admissible amb. temp. | Technical features and connection diagram |
|---|---|---|---|---|---|---|---|---|---|---|---|
| | | | VDC | VDC | m³/h | rpm⁻¹ | W | A | Pa | °C | |
| ***1G 300** | M1G074-CF | Ⓐ | 24 | 16-28 | 2320 | 1830 | 80 | 3.80 | 100 | -25..+60 | p. 277 / J5) |
| ***1G 300** | M1G074-CF | Ⓑ | 48 | 36-57 | 2345 | 1830 | 80 | 1.90 | 100 | -25..+60 | p. 277 / J5) |

Subject to change

**Curves:**

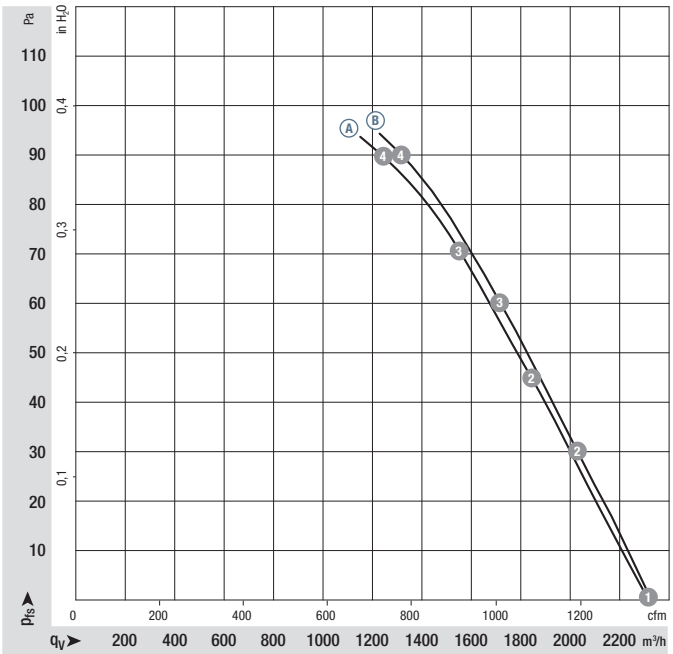


| | | n rpm⁻¹ | Ped W | I A | LWA dB(A) |
|---|---|---|---|---|---|
| Ⓐ | 1 | 1810 | 80 | 3.80 | 67 |
| Ⓐ | 2 | 1730 | 86 | 4.03 | 67 |
| Ⓐ | 3 | 1690 | 87 | 4.10 | 66 |
| Ⓐ | 4 | 1635 | 89 | 4.21 | 70 |
| Ⓑ | 1 | 1870 | 87 | 2.00 | 68 |
| Ⓑ | 2 | 1805 | 90 | 2.10 | 67 |
| Ⓑ | 3 | 1765 | 91 | 2.13 | 67 |
| Ⓑ | 4 | 1695 | 92 | 2.19 | 69 |

Air performance measured according to: ISO 5801, installation category A, in ebm-papst full nozzle without contact protection. Suction-side noise levels: LWA according to ISO 13347, $L_pA$ measured at 1 m distance from fan axis. The values given are applicable only under the specified measuring conditions and may differ depending on the installation conditions. In the event of deviation from the standard configuration, the parameters must be checked after installation! For detailed information see http://www.ebmpapst.com/general conditions



ebmpapst

- **Technical features:** See connection diagram p. 277
- **EMC:** Interference emission acc. to EN 55022 (Class B)
  Immunity to interference acc. to EN 61000-6-2 (industrial environment)
- **Cable exit:** Lateral
- **Conformity with standard(s):** EN 60950-1, UL 1004-1, CSA C22.2 no. 100
- **Approvals:** GOST, UL

| Airflow direction |  "V" without attachments | Weight without attachments kg |  "V" With full round nozzle | Weight with full round nozzle kg |  "V" With finger guard for short nozzle | Weight with finger guard for short nozzle kg |
|---|---|---|---|---|---|---|
| "V" | A1G 300-AC19 -54 | 1.8 | W1G 300-DC19 -54 | 3.8 | S1G 300-AC19 -54 | 2.8 |
| "V" | A1G 300-AC33 -54 | 1.8 | W1G 300-DC33 -54 | 3.8 | S1G 300-AC33 -54 | 3.1 |

**A1G 300**

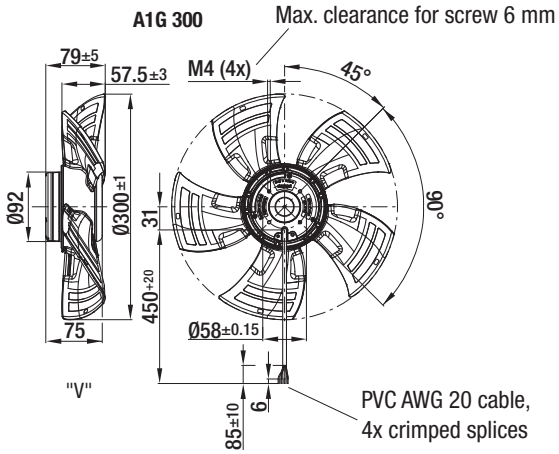


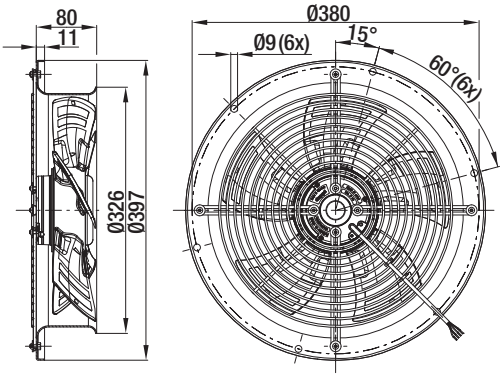


**W1G 300**

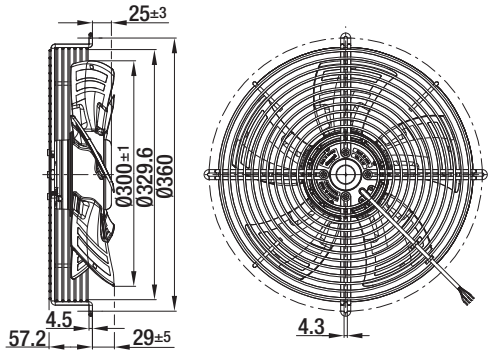


**S1G 300**



# DC centrifugal fans

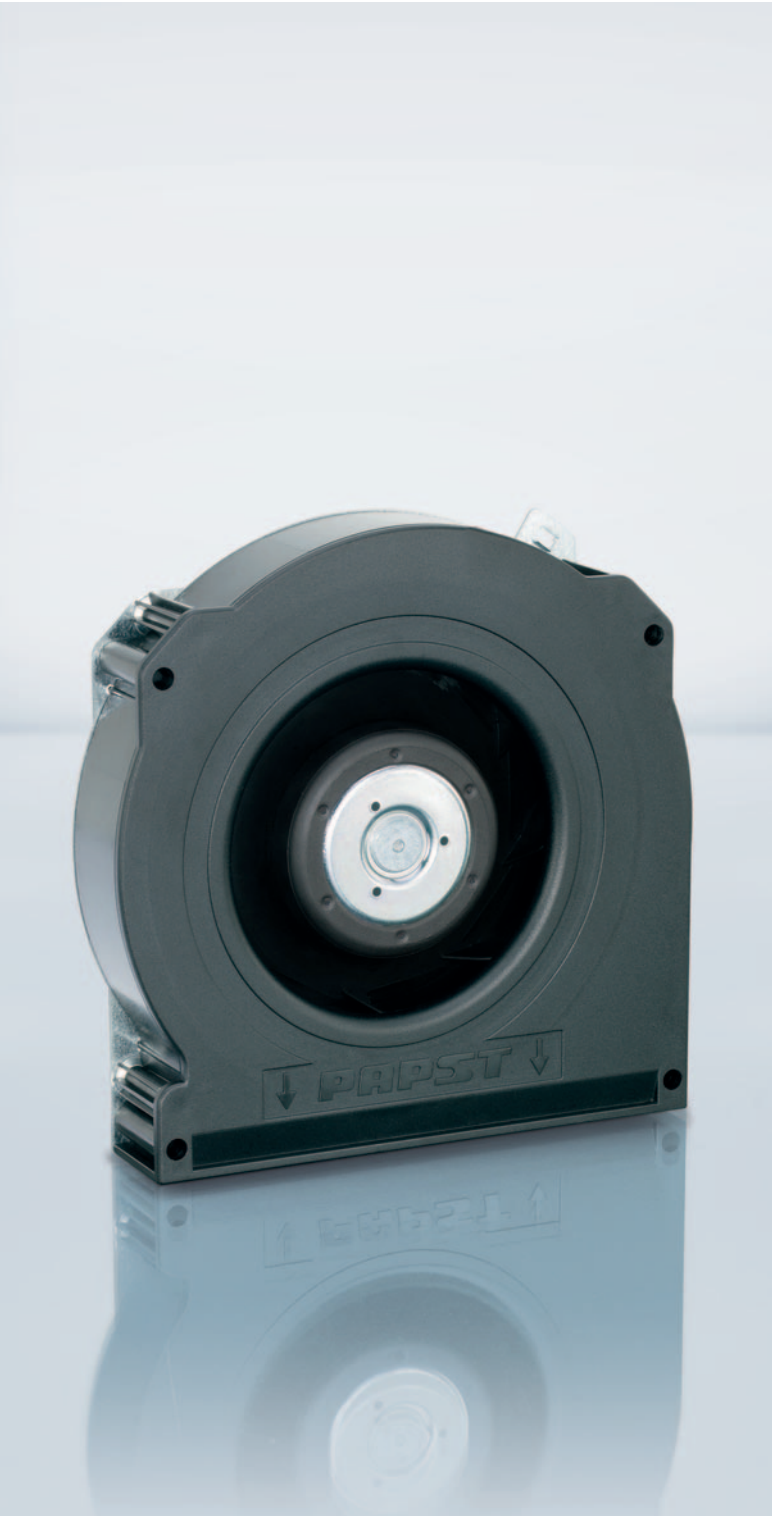



| | |
|---|---|
| DC centrifugal fan overview | **93** |
| DC centrifugal fans | **95** |
| DC tangential fans | **148** |
| DC centrifugal fans and blowers | **150** |

# DC centrifugal fans

Technical information





**Product line**
Our centrifugal product line includes fans for every application. Whether as free-running impellers with a diameter between 97 mm and 225 mm, or as assemblies in a ready-to-install, compact housing with inlet ring with an edge length between 51 mm and 270 mm. Of course, all models feature highly efficient, brushless motor technology.

**Electronic protection against reverse polarity**
ebm-papst DC fans have electronically commutated drives with electronic protection against reverse polarity. The electronics are integrated in the fan's impeller hub to save space.

**Product life expectancy**
A distinctive feature of DC fan technology is the amazing product life expectancy. The outstanding efficiency of the brushless drive results in lower heat stress for the bearings, which significantly increases the service life of the fan.

**Degree of protection**
DC fans with sleeve and ball bearings are powered by class E insulated motors. All ebm-papst fans conform to the requirements of degree of protection IP 20. Fans conforming to IP 54 / IP 68 and special degrees of protection are also available.

**Voltage range**
Many of our DC fans can be operated on voltages that are up to 50 % lower and 25 % higher than their nominal voltage (see voltage range in the technical tables). This allows the air performance to be adapted to the cooling requirements and the noise to be reduced, even if the fan does not have a control input.

**Closed-loop speed control and monitoring**
Closed-loop speed control and function monitoring are becoming increasingly important in many applications. ebm-papst offers many fans in the standard design with a control input and open-collector speed signal.

**S-Force centrifugal RadiCal**
The S-Force centrifugal fans provide peak performance among fans of this type. With air flow capacity of over 1500 m³/h and a pressure increase of up to 1000 pascals, the highest heat flows are manageable. The models are extremely efficient due to the multi-pole, electronically commutated drive motors, and can be adapted individually to every application thanks to intelligent motor features. Some models use our highly efficient RadiCal impellers.

# Centrifugal fans for DC operation

## Overview of air performance

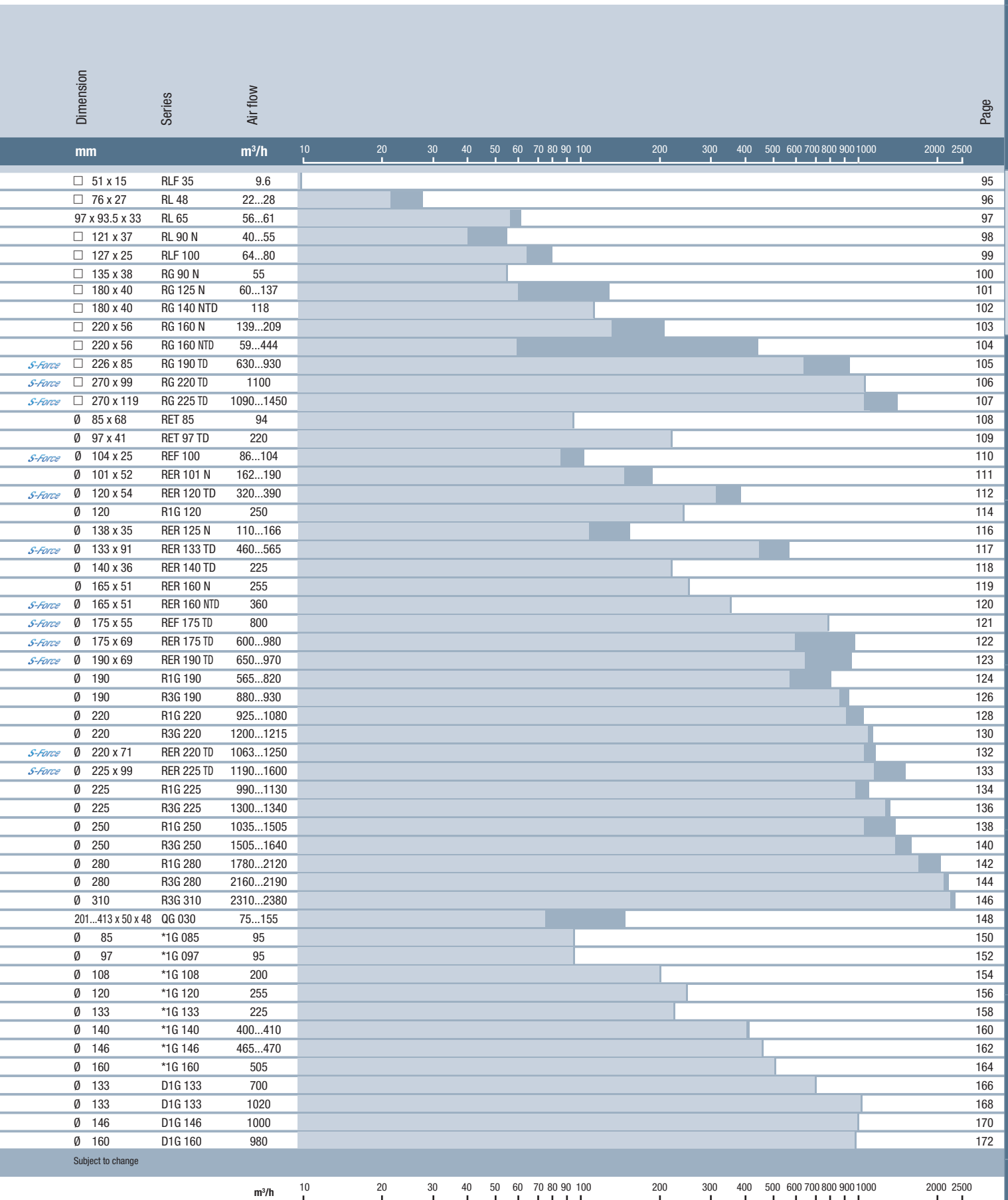

# Centrifugal fans for DC operation

## Overview of technically feasible designs

| Dimension | | VDE, UL, CSA | SINTEC sleeve bearings / ball bearings | Speed signal | Go / NoGo alarm | Alarm with speed limit | External temperature sensor | Internal temperature sensor | PWM control input | Analog control input | Multi-options control input | Moisture protection | IP >= 54 | IP 68 | Salt spray protection | Page |
|---|---|---|---|---|---|---|---|---|---|---|---|---|---|---|---|---|
| **Centrifugal fans** | | | | | | | | | | | | | | | | |
| **mm** | **Series** | | | **OPTIONAL** | | | | | | | | | | | | **S.** |
| ☐ 51 x 15 | RLF 35 | ja | ■ | • | – | – | – | – | • | – | – | • | – | – | – | 95 |
| ☐ 76 x 27 | RL 48 | ja | ■ | • | • | • | • | • | • | • | – | • | – | – | – | 96 |
| 97 x 93,5 x 33 | RL 65 | ja | ■ | • | • | • | • | • | • | • | – | • | – | – | – | 97 |
| ☐ 121 x 37 | RL 90 N | ja | □/■ | • | • | • | • | • | • | • | – | • | • | • | • | 98 |
| ☐ 127 x 25 | RLF 100 | ja | ■ | • | • | • | • | • | • | • | – | • | • | – | – | 99 |
| ☐ 135 x 38 | RG 90 N | ja | □/■ | • | • | • | • | • | • | • | – | • | • | • | • | 100 |
| ☐ 180 x 40 | RG 125 N | ja | ■ | • | • | • | • | • | • | • | – | • | • | • | • | 101 |
| ☐ 180 x 40 | RG 140 NTD | ja | ■ | • | • | • | • | – | • | • | • | • | • | • | • | 102 |
| ☐ 220 x 56 | RG 160 N | ja | ■ | • | • | • | • | • | • | • | – | • | • | – | • | 103 |
| ☐ 220 x 56 | RG 160 NTD | ja | ■ | • | • | • | • | • | • | • | – | • | • | – | • | 104 |
| S-Force ☐ 226 x 85 | RG 190 TD | ja | ■ | • | • | • | • | • | • | • | • | • | • | – | • | 105 |
| S-Force ☐ 270 x 99 | RG 220 TD | ja | ■ | • | • | • | • | • | • | • | – | • | • | – | • | 106 |
| S-Force ☐ 270 x 119 | RG 225 TD | ja | ■ | • | • | • | • | • | • | • | – | • | • | – | • | 107 |
| Ø 85 x 68 | RET 85 TD | ja | ■ | • | • | • | • | • | • | • | – | • | – | – | – | 108 |
| S-Force Ø 97 x 41 | RET 97 TD | ja | ■ | • | • | • | • | • | • | • | – | • | – | – | – | 109 |
| Ø 104 x 25 | REF 100 | ja | ■ | • | • | • | • | • | • | • | – | • | • | – | – | 110 |
| Ø 101 x 52 | RER 101 N | ja | ■ | • | • | • | • | • | • | • | – | • | – | – | – | 111 |
| S-Force Ø 120 x 54 | RER 120 TD | ja | ■ | • | • | • | • | • | • | • | – | • | – | – | – | 112 |
| Ø 138 x 35 | RER 125 N | ja | ■ | • | • | • | • | • | • | • | – | • | • | • | • | 116 |
| S-Force Ø 133 x 91 | RER 133 TD | ja | ■ | • | • | • | • | • | • | • | • | • | • | – | • | 117 |
| Ø 140 x 36 | RER 140 TD | ja | ■ | • | • | • | • | • | • | • | • | • | • | – | • | 118 |
| Ø 165 x 51 | RER 160 N | ja | ■ | • | • | • | • | • | • | • | – | • | • | – | • | 119 |
| S-Force Ø 165 x 51 | RER 160 NTD | ja | ■ | • | • | • | • | • | • | • | – | • | • | – | – | 120 |
| S-Force Ø 175 x 55 | REF 175 TD | ja | ■ | • | • | • | • | • | • | • | • | • | • | – | – | 121 |
| S-Force Ø 175 x 69 | RER 175 TD | ja | ■ | • | • | • | • | • | • | • | • | • | • | – | • | 122 |
| S-Force Ø 190 x 69 | RER 190 TD | ja | ■ | • | • | • | • | • | • | • | • | • | • | – | • | 123 |
| S-Force Ø 220 x 71 | RER 220 TD | ja | ■ | • | • | • | • | • | • | • | • | • | • | – | • | 132 |
| S-Force Ø 225 x 99 | RER 225 TD | ja | ■ | • | • | • | • | • | • | • | • | • | • | – | • | 133 |
| 201...413 x 50 x 48 | QG 030 | ja | □/■ | • | – | – | – | – | – | – | – | • | – | – | – | 148 |

Subject to change

– Not yet available □ Sleeve bearings
• Available ■ Ball bearings

Please note that these special versions are not possible for all voltages and speeds, and not in all combinations. The special versions are designed for specific customers and projects. As a rule they are not available off the shelf and are subject to minimum volumes.

Please consult your customer support representative about the feasibility of your special variant.

## Optional special versions (see page 10)

On the catalog pages and in the overview on page 10, we provide information about the special designs that are technically feasible in the fan series. Please note that these special versions are not possible for all voltages and speeds, and not in all combinations. The special versions are designed for specific customers and projects and are usually not available off the shelf.

Max. 9.6 m³/h

# DC centrifugal fans

☐ 51 x 15 mm



- **Material:** Scroll housing: GRP[1)]
  Impeller: GRP[1)]
- **Direction of air flow:** Axial: Intake,
  Centrifugal: Exhaust
- **Connection:** via single wires AWG 26, TR 64
- **Highlights:** Forward-curved impeller
- **Weight:** 40 g

- **Possible special versions:**
  (See chapter DC fans - specials)
  - Speed signal
  - PWM control input
  - Moisture protection

1) Fiberglass-reinforced plastic

| Series RLF 35<br>VHS0035XUDAS<br>**Nominal data** | Air flow | Air flow | **Nominal voltage** | Voltage range | Sound power level | Sintec sleeve bearings<br>Ball bearings | Power consumption | Nominal speed | Temperature range | Service life $L_{10}$ (40 °C)<br>ebm-papst standard<br>Service life $L_{10}$ ($T_{max}$)<br>ebm-papst standard | Life expectancy $L_{10IPC}$<br>(40 °C) see page 15 | Curve |
|---|---|---|---|---|---|---|---|---|---|---|---|---|
| **Type** | **m³/h** | **cfm** | **VDC** | **VDC** | **Bel(A)** | **□/■** | **Watts** | **rpm⁻¹** | **°C** | **Hours** | **Hours** | |
| RLF 35-8/12 N | 9.6 | 5.6 | **12** | 8...13.2 | 5.5 | ■ | 3.5 | 6 700 | -20...+70 | 60 000 / 30 000 | 102 500 | ① |
| RLF 35-8/14 N | 9.6 | 5.6 | **24** | 14...28 | 5.5 | ■ | 4.3 | 6 700 | -20...+70 | 60 000 / 30 000 | 102 500 | ① |

Subject to change

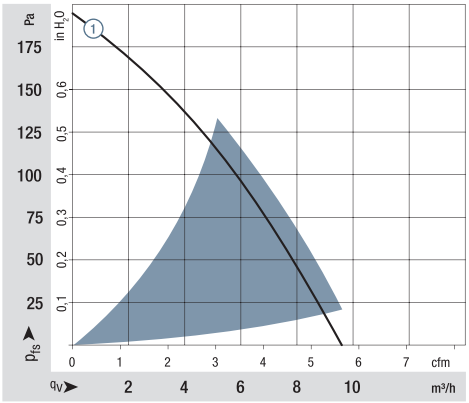


Air performance measured according to: ISO 5801.
Installation category A, without contact protection.
Noise: Total sound power level $L_{WA}$ ISO 10302
measured on a hemisphere with a radius of 2 m.
Sound pressure level $L_{pA}$ measured at 1 m distance
from fan axis.
The values given are applicable only under the specified
measuring conditions and may differ depending on the
installation conditions.
In the event of deviation from the standard configuration,
the parameters must be checked after installation!
For detailed information see
http://www.ebmpapst.com/general conditions

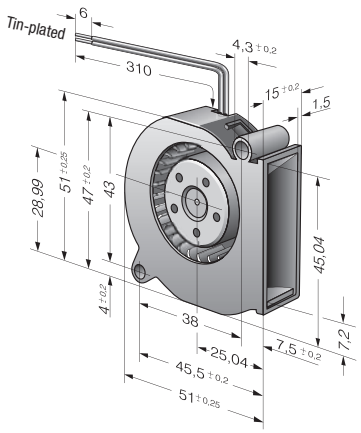

Max. 28 m³/h

# DC centrifugal fans

☐ 76 x 27 mm



- **Material:** Scroll housing: GRP[1)]
  Impeller: GRP[1)]
- **Direction of air flow:** Axial: Intake,
  Centrifugal: Exhaust
- **Connection:** via single wires AWG 26, TR 64
- **Highlights:** Forward-curved impeller
- **Weight:** 75 g

- **Possible special versions:**
  (See chapter DC fans - specials)
  - Speed signal
  - Go- / NoGo alarm
  - Alarm with speed limit
  - External temperature sensor
  - Internal temperature sensor
  - PWM control input
  - Analog control input
  - Moisture protection

1) Fiberglass-reinforced plastic

| Series RL 48<br>VHS0048XUEBS<br>**Nominal data** | Air flow | Air flow | **Nominal voltage** | Voltage range | Sound power level | Sintec sleeve bearings<br>Ball bearings | Power consumption | Nominal speed | Temperature range | Service life $L_{10}$ (40 °C)<br>ebm-papst standard<br>Service life $L_{10}$ ($T_{max}$)<br>ebm-papst standard | Life expectancy $L_{10IPC}$<br>(40 °C) see page 15 | Curve |
|---|---|---|---|---|---|---|---|---|---|---|---|---|
| **Type** | **m³/h** | **cfm** | **VDC** | **VDC** | **Bel(A)** | **□ / ■** | **Watts** | **rpm⁻¹** | **°C** | **Hours** | **Hours** | |
| RL 48-19/12 ML | 22 | 12.9 | **12** | 8...15 | 5.3 | ■ | 5.0 | 3 500 | -20...+70 | 70 000 / 35 000 | 117 500 | ① |
| RL 48-19/12 | 28 | 16.5 | **12** | 8...13.5 | 5.7 | ■ | 4.6 | 4 400 | -20...+70 | 60 000 / 30 000 | 102 500 | ② |
| RL 48-19/14 ML | 22 | 12.9 | **24** | 18...28 | 5.3 | ■ | 5.0 | 3 500 | -20...+70 | 70 000 / 35 000 | 117 500 | ① |
| RL 48-19/14 | 28 | 16.5 | **24** | 18...26.4 | 5.7 | ■ | 4.4 | 4 400 | -20...+70 | 60 000 / 30 000 | 102 500 | ② |
| RL 48-19/18 R-016 | 27 | 15.8 | **48** | 36...56 | 5.7 | ■ | 4.6 | 4 400 | -32...+70 | 60 000 / 30 000 | 102 500 | ② |

Subject to change

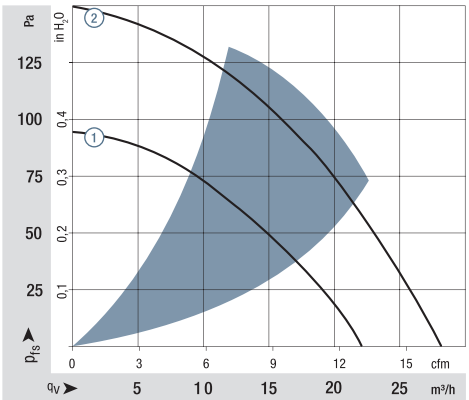


Air performance measured according to: ISO 5801.
Installation category A, without contact protection.
Noise: Total sound power level $L_{WA}$ ISO 10302 measured on a hemisphere with a radius of 2 m.
Sound pressure level $L_{pA}$ measured at 1 m distance from fan axis.
The values given are applicable only under the specified measuring conditions and may differ depending on the installation conditions.
In the event of deviation from the standard configuration, the parameters must be checked after installation!
For detailed information see
http://www.ebmpapst.com/general conditions

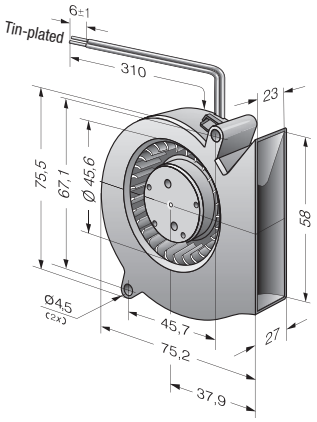




ebmpapst

Max. 61 m³/h

# DC centrifugal fans

97 x 93.5 x 33 mm

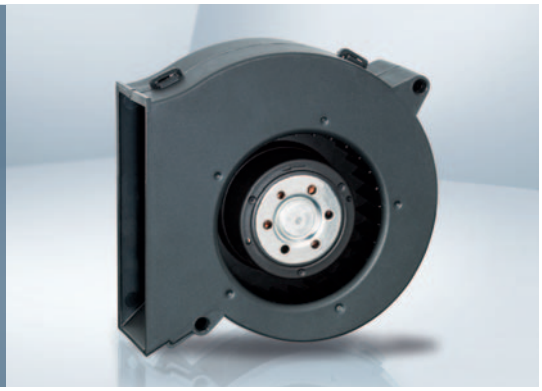

- **Material:** Scroll housing: GRP[1)]
  Impeller: GRP[1)]
- **Direction of air flow:** Axial: Intake,
  Centrifugal: Exhaust
- **Connection:** via single wires AWG 26, TR 64
- **Highlights:** Forward-curved impeller
- **Weight:** 170 g

- **Possible special versions:**
  (See chapter DC fans - specials):
  - Speed signal
  - Go / NoGo alarm
  - Alarm with speed limit
  - External temperature sensor
  - Internal temperature sensor
  - PWM control input
  - Analog control input
  - Moisture protection

1) Fiberglass-reinforced plastic

Series RL 65
VHS0065XUFBS

**Nominal data**

| Type | Air flow m³/h | Air flow cfm | **Nominal voltage** VDC | Voltage range VDC | Sound power level Bel(A) | Sintec sleeve bearings / Ball bearings □/■ | Power consumption Watts | Nominal speed rpm⁻¹ | Temperature range °C | Service life $L_{10}$ (40 °C) ebm-papst standard / Service life $L_{10}$ ($T_{max}$) ebm-papst standard Hours | Life expectancy $L_{10IPC}$ (40 °C) see page 15 Hours | Curve |
|---|---|---|---|---|---|---|---|---|---|---|---|---|
| RL 65-21/12 | 56 | 32.9 | **12** | 6.8...13.8 | 6.6 | ■ | 15.0 | 4 500 | -20...+70 | 60 000 / 30 000 | 102 500 | ① |
| RL 65-21/12 H | 61 | 35.8 | **12** | 6.8...13.2 | 6.8 | ■ | 19.2 | 4 900 | -20...+55 | 55 000 / 40 000 | 92 500 | ② |
| RL 65-21/14 | 56 | 32.9 | **24** | 12...26.4 | 6.6 | ■ | 14.0 | 4 500 | -20...+70 | 60 000 / 30 000 | 102 500 | ① |
| RL 65-21/14 H | 61 | 35.8 | **24** | 12...26.4 | 6.8 | ■ | 18.0 | 4 900 | -20...+60 | 55 000 / 35 000 | 92 500 | ② |
| RL 65-21/18/2 HPR-180 | 61 | 35.8 | **48** | 36...60 | 6.8 | ■ | 17.3 | 4 900 | -20...+70 | 55 000 / 27 500 | 92 500 | ② |

Subject to change

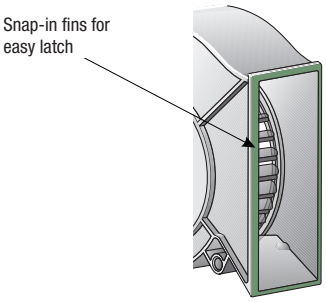


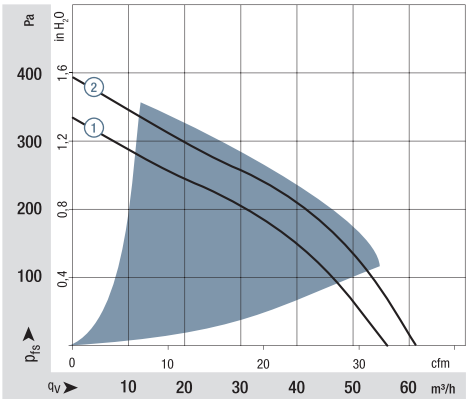


Air performance measured according to: ISO 5801.
Installation category A, without contact protection.
Noise: Total sound power level $L_{WA}$ ISO 10302
measured on a hemisphere with a radius of 2 m.
Sound pressure level $L_{pA}$ measured at 1 m distance from fan axis.
The values given are applicable only under the specified measuring conditions and may differ depending on the installation conditions.
In the event of deviation from the standard configuration, the parameters must be checked after installation!
For detailed information see
http://www.ebmpapst.com/general conditions

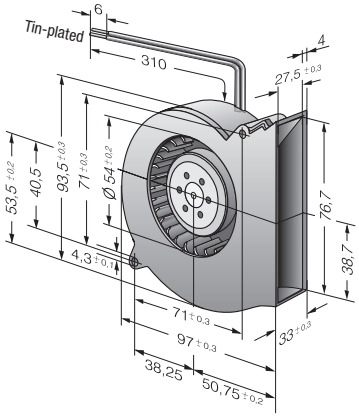

Max. 55 m³/h

# DC centrifugal fans

☐ 121 x 37 mm

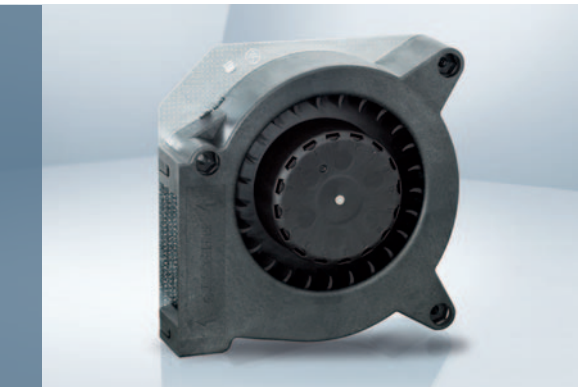

- **Material:** Scroll housing: GRP[1)]
  Impeller: GRP[1)]
  Base plate: Sheet steel
- **Direction of air flow:** Axial: Intake,
  Centrifugal: Exhaust
- **Connection:** via single wires AWG 22, TR 64
- **Highlights:** Forward-curved impeller
- **Weight:** 420 g

- **Possible special versions:**
  (See chapter DC fans - specials)
  - Speed signal
  - Go / NoGo alarm
  - Alarm with speed limit
  - External temperature sensor
  - Internal temperature sensor
  - PWM control input
  - Analog control input
  - Moisture protection
  - Salt spray protection
  - Degree of protection:IP 54 / IP 68

1) Fiberglass-reinforced plastic

Series RL 90 N
VHS0090XUJBS

| Nominal data | Air flow | Air flow | Nominal voltage | Voltage range | Sound power level | Sintec sleeve bearings / Ball bearings | Power consumption | Nominal speed | Temperature range | Service life $L_{10}$ (40 °C) ebm-papst standard / Service life $L_{10}$ ($T_{max}$) ebm-papst standard | Life expectancy $L_{10IPC}$ (40 °C) see page 15 | Curve |
|---|---|---|---|---|---|---|---|---|---|---|---|---|
| **Type** | **m³/h** | **cfm** | **VDC** | **VDC** | **Bel(A)** | **□/■** | **Watts** | **rpm⁻¹** | **°C** | **Hours** | **Hours** | |
| RL 90-18/12 N | 40 | 23.5 | **12** | 7...15 | 5.8 | ■ | 6.3 | 2 500 | -30...+75 | 62 500 / 27 500 | 105 000 | ① |
| RL 90-18/14 NG | 40 | 23.5 | **24** | 12...28 | 5.8 | □ | 5.6 | 2 500 | -20...+75 | 62 500 / 27 500 | 105 000 | ① |
| RL 90-18/14 N | 40 | 23.5 | **24** | 12...28 | 5.8 | ■ | 5.6 | 2 500 | -30...+75 | 62 500 / 27 500 | 105 000 | ① |
| RL 90-18/18 NH | 55 | 32.4 | **48** | 36...53 | 6.9 | ■ | 14.7 | 3 500 | -30...+65 | 32 500 / 17 500 | 55 000 | ② |

Subject to change

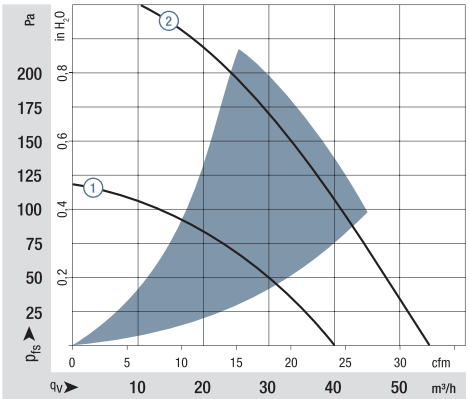


Air performance measured according to:
ISO 5801.
Installation category A, without contact protection.
Noise: Total sound power level $L_{WA}$ ISO 10302 measured on a hemisphere with a radius of 2 m; Sound pressure level $L_{pA}$ measured at 1 m distance from fan axis.
The acoustic values are only valid for the described measurement setup and may vary depending on the installation situation.
In the event of deviation from the standard configuration, the parameters must be checked after installation!
For detailed information see
http://www.ebmpapst.com/general conditions

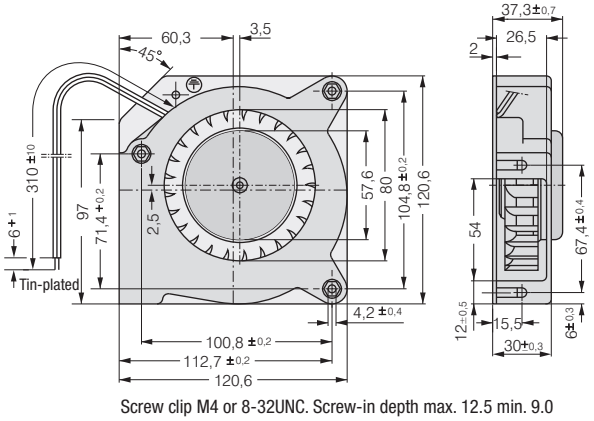


Screw clip M4 or 8-32UNC. Screw-in depth max. 12.5 min. 9.0



ebmpapst

Max. 80 m³/h

# DC centrifugal fans

☐ 127 x 25 mm

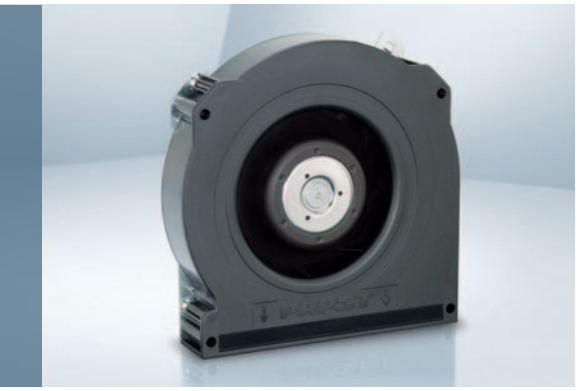

- **Material:** Scroll housing: GRP[1)]
  Impeller: GRP[1)]
  Base plate: Sheet steel
- **Direction of air flow:** Axial: Intake,
  Centrifugal: Exhaust
- **Connection:** via single wires AWG 22, TR 64
- **Highlights:** Optional protective cap for outlet opening
  Backward-curved impeller
- **Weight:** 320 g

- **Possible special versions:**
  (See chapter DC fans - specials)
  - Speed signal
  - Go / NoGo alarm
  - Alarm with speed limit
  - External temperature sensor
  - Internal temperature sensor
  - PWM control input
  - Analog control input
  - Moisture protection
  - Degree of protection: IP 54

1) Fiberglass-reinforced plastic

| Series RLF 100<br>VCS0100XUGBS<br>**Nominal data** | Air flow | Air flow | **Nominal voltage** | Voltage range | Sound power level | Sintec sleeve bearings<br>Ball bearings | Power consumption | Nominal speed | Temperature range | Service life $L_{10}$ (40 °C)<br>ebm-papst standard<br>Service life $L_{10}$ ($T_{max}$)<br>ebm-papst standard | Life expectancy $L_{10IPC}$<br>(40 °C) see page 15 | Curve |
|---|---|---|---|---|---|---|---|---|---|---|---|---|
| **Type** | **m³/h** | **cfm** | **VDC** | **VDC** | **Bel(A)** | **□ / ■** | **Watts** | **rpm⁻¹** | **°C** | **Hours** | **Hours** | |
| RLF 100-11/12 | 64 | 37.7 | **12** | 8...15 | 6.4 | ■ | 8.0 | 5 100 | -20...+75 | 80 000 / 30 000 | 135 000 | ① |
| RLF 100-11/14 | 64 | 37.7 | **24** | 16...30 | 6.4 | ■ | 8.0 | 5 100 | -20...+75 | 80 000 / 30 000 | 135 000 | ① |
| RLF 100-11/18 | 64 | 37.7 | **48** | 36...60 | 6.4 | ■ | 8.6 | 5 100 | -20...+75 | 80 000 / 30 000 | 135 000 | ① |
| High speed models with open-collector tachometer and PWM speed control. | | | | | | | | | | | | |
| RLF 100-11/12/2 HP-200 | 80 | 47.1 | **12** | 10...13.2 | 7.5 | ■ | 18.6 | 6 400 | -20...+60 | 72 500 / 45 000 | 122 500 | ② |
| RLF 100-11/18/2 HP-182 | 80 | 47.1 | **48** | 43...53 | 7.5 | ■ | 17.0 | 6 400 | -20...+70 | 72 500 / 35 000 | 122 500 | ② |

Subject to change

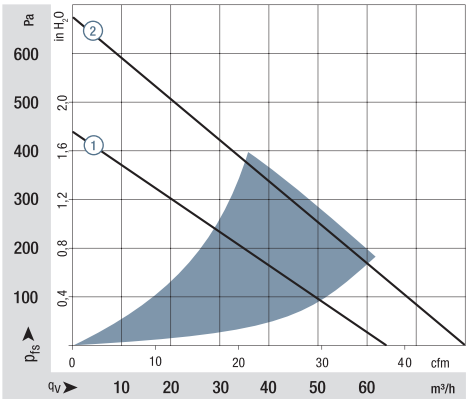


Air performance measured according to: ISO 5801.
Installation category A, without contact protection.
Noise: Total sound power level $L_{WA}$ ISO 10302 measured on a hemisphere with a radius of 2 m.
Sound pressure level $L_{pA}$ measured at 1 m distance from fan axis.
The values given are applicable only under the specified measuring conditions and may differ depending on the installation conditions.
In the event of deviation from the standard configuration, the parameters must be checked after installation!
For detailed information see
http://www.ebmpapst.com/general conditions

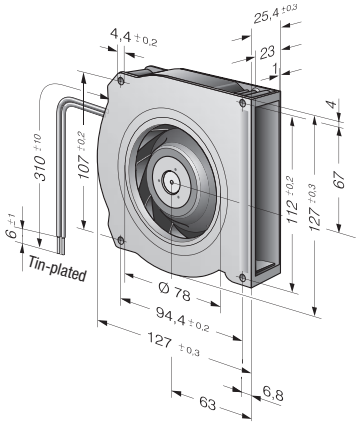

Max. 55 m³/h

# DC centrifugal fans

☐ 135 x 38 mm

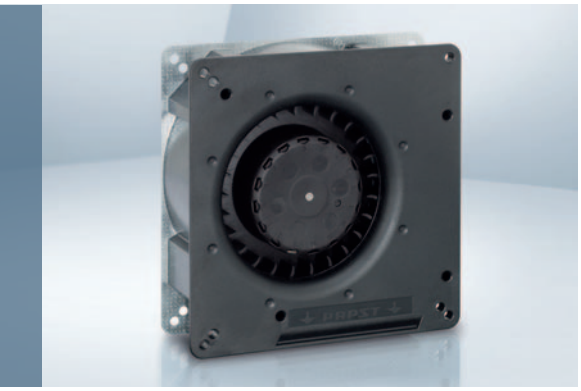

- **Material:** Scroll housing: GRP[1)]
  Impeller: GRP[1)]
  Base plate: Sheet steel
- **Direction of air flow:** Axial: Intake,
  Centrifugal: Exhaust
- **Connection:** Via single wires AWG 22, TR 64
  48 V model: Flat plug
  6.3 x 0.8 mm for ground conductor
- **Highlights:** Forward-curved impeller
- **Weight:** 440 g

- **Possible special versions:**
  (See chapter DC fans - specials)
  - Speed signal
  - Go / NoGo alarm
  - Alarm with speed limit
  - External temperature sensor
  - Internal temperature sensor
  - PWM control input
  - Analog control input
  - Moisture protection
  - Salt spray protection
  - Degree of protection: IP 54 / IP 68

1) Fiberglass-reinforced plastic

| Series RG 90 N<br>VHS0090XUJBS<br>**Nominal data** | Air flow | Air flow | **Nominal voltage** | Voltage range | Sound power level | Sintec sleeve bearings<br>Ball bearings | Power consumption | Nominal speed | Temperature range | Service life $L_{10}$ (40 °C)<br>ebm-papst standard<br>Service life $L_{10}$ ($T_{max}$)<br>ebm-papst standard | Life expectancy $L_{10IPC}$<br>(40 °C) see page 15 | Curve |
|---|---|---|---|---|---|---|---|---|---|---|---|---|
| **Type** | **m³/h** | **cfm** | **VDC** | **VDC** | **Bel(A)** | **□/■** | **Watts** | **rpm⁻¹** | **°C** | **Hours** | **Hours** | |
| RG 90-18/12 N | 55 | 32.4 | **12** | 7...15 | 5.5 | ■ | 6.7 | 2 200 | -30...+75 | 62 500 / 27 500 | 105 000 | ① |
| RG 90-18/14 N | 55 | 32.4 | **24** | 12...28 | 5.5 | ■ | 6.2 | 2 200 | -30...+75 | 62 500 / 27 500 | 105 000 | ① |
| RG 90-18/18 N | 55 | 32.4 | **48** | 36...56 | 5.5 | ■ | 6.1 | 2 200 | -30...+75 | 62 500 / 27 500 | 105 000 | ① |

Subject to change

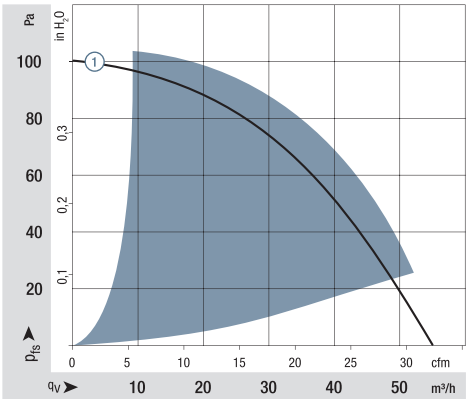


Air performance measured according to: ISO 5801.
Installation category A, without contact protection.
Noise: Total sound power level $L_{WA}$ ISO 10302 measured on a hemisphere with a radius of 2 m.
Sound pressure level $L_{pA}$ measured at 1 m distance from fan axis.
The values given are applicable only under the specified measuring conditions and may differ depending on the installation conditions.
In the event of deviation from the standard configuration, the parameters must be checked after installation!
For detailed information see
http://www.ebmpapst.com/general conditions

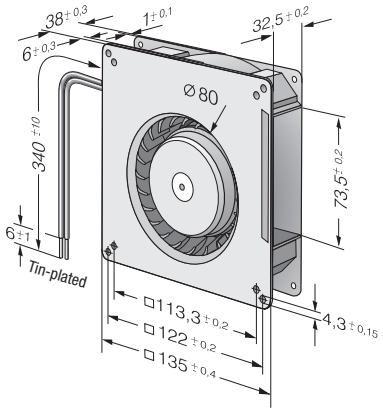




ebmpapst

Max. 137 m³/h

# DC centrifugal fans

☐ 180 x 40 mm

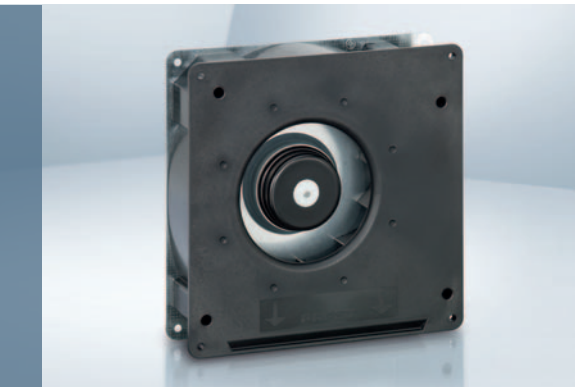

- **Material:** Scroll housing: GRP[1)]
  Impeller: GRP[1)]
  Base plate: Sheet steel
- **Direction of air flow:** Axial: Intake,
  Centrifugal: Exhaust
- **Connection:** Via single wires AWG 22, TR 64
  48 V model: Flat plug
  6.3 x 0.8 mm for ground conductor
- **Highlights:** Backward-curved impeller
- **Weight:** 730 g

- **Possible special versions:**
  (See chapter DC fans - specials)
  - Speed signal
  - Go / NoGo alarm
  - Alarm with speed limit
  - External temperature sensor
  - Internal temperature sensor
  - PWM control input
  - Analog control input
  - Moisture protection
  - Salt spray protection
  - Degree of protection: IP 54 / IP 68

1) Fiberglass-reinforced plastic

Series RG 125 N
VCS0125XUJBS

| Nominal data | Air flow | Air flow | Nominal voltage | Voltage range | Sound power level | Sintec sleeve bearings / Ball bearings | Power consumption | Nominal speed | Temperature range | Service life $L_{10}$ (40 °C) ebm-papst standard / Service life $L_{10}$ ($T_{max}$) ebm-papst standard | Life expectancy $L_{10IPC}$ (40 °C) see page 15 | Curve |
|---|---|---|---|---|---|---|---|---|---|---|---|---|
| **Type** | **m³/h** | **cfm** | **VDC** | **VDC** | **Bel(A)** | **□/■** | **Watts** | **rpm⁻¹** | **°C** | **Hours** | **Hours** | |
| RG 125-19/12 NM | 60.0 | 35.3 | **12** | 7...15 | 4.8 | ■ | 2.0 | 1 750 | -30...+75 | 70 000 / 30 000 | 117 500 | ① |
| RG 125-19/12 N | 87.5 | 51.5 | **12** | 7...15 | 5.8 | ■ | 5.2 | 2 550 | -30...+75 | 62 500 / 27 500 | 105 000 | ② |
| RG 125-19/14 NM | 60.0 | 35.3 | **24** | 12...28 | 4.8 | ■ | 2.0 | 1 750 | -30...+75 | 70 000 / 30 000 | 117 500 | ① |
| RG 125-19/14 N | 87.5 | 51.5 | **24** | 12...28 | 5.8 | ■ | 4.9 | 2 550 | -30...+75 | 62 500 / 27 500 | 105 000 | ② |
| RG 125-19/18 N | 87.5 | 51.5 | **48** | 36...56 | 5.8 | ■ | 4.8 | 2 550 | -30...+75 | 62 500 / 27 500 | 105 000 | ② |
| RG 125-19/18 NH | 137 | 80.6 | **48** | 36...56 | 7.0 | ■ | 19.0 | 4 000 | -20...+70 | 55 000 / 27 500 | 92 500 | ③ |

Subject to change

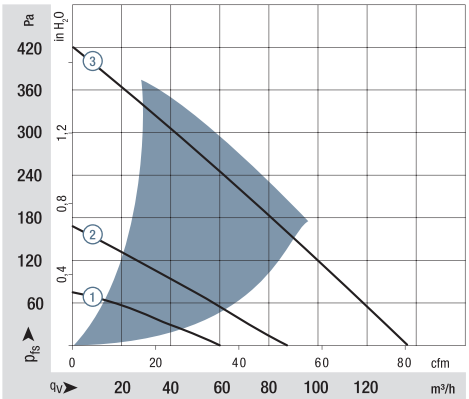


Air performance measured according to: ISO 5801.
Installation category A, without contact protection.
Noise: Total sound power level $L_{WA}$ ISO 10302 measured on a hemisphere with a radius of 2 m.
Sound pressure level $L_{pA}$ measured at 1 m distance from fan axis.
The values given are applicable only under the specified measuring conditions and may differ depending on the installation conditions.
In the event of deviation from the standard configuration, the parameters must be checked after installation!
For detailed information see
http://www.ebmpapst.com/general conditions

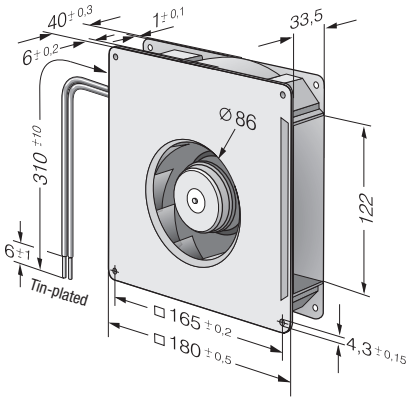

Max. 118 m³/h

# DC centrifugal fans

☐ 180 x 40 mm

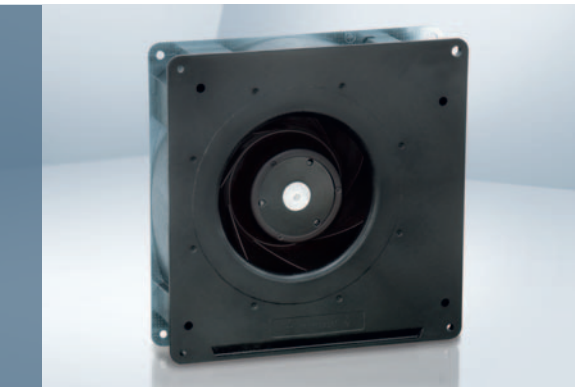

- **Material:** Scroll housing: GRP[1)]
  Impeller: GRP[1)]
  Base plate: Sheet steel
- **Direction of air flow:** Axial: Intake,
  Centrifugal: Exhaust
- **Connection:** via single wires AWG 22, TR 64
- **Highlights:** Backward-curved impeller
  3-phase fan drive with special commutation electronics for extremely low-noise operation
- **Weight:** 750 g

- **Possible special versions:**
  (See chapter DC fans - specials)
  - Speed signal
  - Go / No-go alarm
  - Alarm with speed limit
  - External temperature sensor
  - PWM control input
  - Analog control input
  - Multi-option control input
  - Moisture protection
  - Salt spray protection
  - Degree of protection: IP 54

1) Fiberglass-reinforced plastic

Series RG 140 NTD
VCS0140XUJCS

| Nominal data | Air flow | Air flow | Nominal voltage | Voltage range | Sound power level | Sintec sleeve bearings / Ball bearings | Power consumption | Nominal speed | Temperature range | Service life $L_{10}$ (40 °C) ebm-papst standard / Service life $L_{10}$ ($T_{max}$) ebm-papst standard | Life expectancy $L_{10IPC}$ (40 °C) see page 15 | Curve |
|---|---|---|---|---|---|---|---|---|---|---|---|---|
| **Type** | **m³/h** | **cfm** | **VDC** | **VDC** | **Bel(A)** | **□ / ■** | **Watts** | **rpm⁻¹** | **°C** | **Hours** | **Hours** | |
| RG 140-22/12 N/2 TDAU-505 | 118 | 69.4 | **12** | 10.8...13.2 | 6.0 | ■ | 10.2 | 2 500 | -20...+70 | 62 500 / 32 500 | 105 000 | ① |
| RG 140-22/14 N/2 TDPU | 118 | 69.4 | **24** | 20.4...27.6 | 6.0 | ■ | 9.3 | 2 500 | -20...+70 | 62 500 / 32 500 | 105 000 | ① |

Subject to change

Higher performance levels on request.

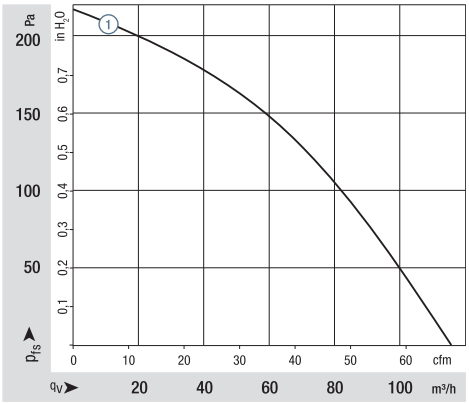


Air performance measured according to: ISO 5801.
Installation category A, without contact protection.
Noise: Total sound power level $L_{WA}$ ISO 10302 measured on a hemisphere with a radius of 2 m.
Sound pressure level $L_{pA}$ measured at 1 m distance from fan axis.
The values given are applicable only under the specified measuring conditions and may differ depending on the installation conditions.
In the event of deviation from the standard configuration, the parameters must be checked after installation!
For detailed information see
http://www.ebmpapst.com/general conditions

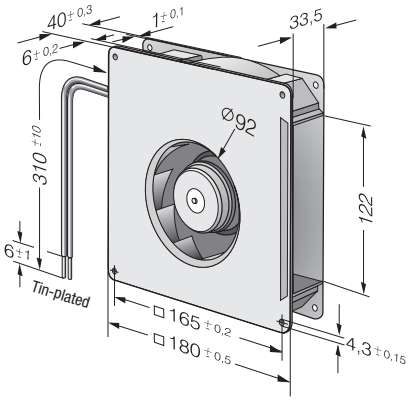




ebmpapst

Max. 209 m³/h

# DC centrifugal fans

☐ 220 x 56 mm

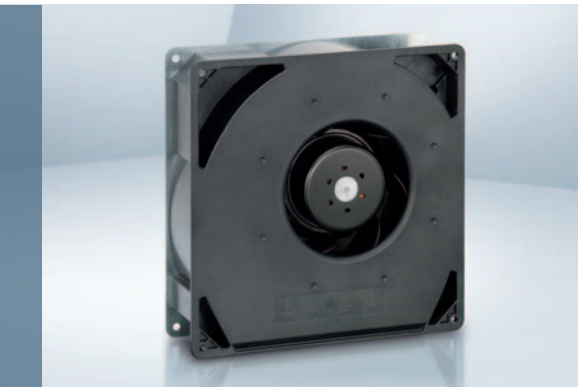

- **Material:** Scroll housing: GRP[1)]
  Impeller: GRP[1)]
  Base plate: Sheet steel
- **Direction of air flow:** Axial: Intake,
  Centrifugal: Exhaust
- **Connection:** Via single wires AWG 22, TR 64
  48 V model: Flat plug
  6.3 x 0.8 mm for ground conductor
- **Highlights:** Backward-curved impeller
- **Weight:** 1.4 kg

- **Possible special versions:**
  (See chapter DC fans - specials)
  - Speed signal
  - Go / NoGo alarm
  - Alarm with speed limit
  - External temperature sensor
  - Internal temperature sensor
  - PWM control input
  - Analog control input
  - Moisture protection
  - Salt spray protection
  - Degree of protection: IP 54

1) Fiberglass-reinforced plastic

| Series RG 160 N<br>VCS0160XULCS<br>**Nominal data** | Air flow | Air flow | **Nominal voltage** | Voltage range | Sound power level | Sintec sleeve bearings<br>Ball bearings | Power consumption | Nominal speed | Temperature range | Service life $L_{10}$ (40 °C) ebm-papst standard<br>Service life $L_{10}$ ($T_{max}$) ebm-papst standard | Life expectancy $L_{10IPC}$ (40 °C) see page 15 | Curve |
|---|---|---|---|---|---|---|---|---|---|---|---|---|
| **Type** | **m³/h** | **cfm** | **VDC** | **VDC** | **Bel(A)** | **□/■** | **Watts** | **rpm⁻¹** | **°C** | **Hours** | **Hours** | |
| RG 160-28/12 N | 209 | 123 | **12** | 7.5...14 | 6.6 | ■ | 21.0 | 2 850 | -20...+70 | 70 000 / 35 000 | 117 500 | ② |
| RG 160-28/14 NM | 139 | 81 | **24** | 12...28 | 5.6 | ■ | 7.0 | 1 900 | -20...+70 | 80 000 / 40 000 | 135 000 | ① |
| RG 160-28/14 N | 209 | 123 | **24** | 12...28 | 6.6 | ■ | 20.0 | 2 850 | -20...+70 | 70 000 / 35 000 | 117 500 | ② |
| RG 160-28/18 N | 209 | 123 | **48** | 28...60 | 6.6 | ■ | 20.0 | 2 850 | -20...+70 | 70 000 / 35 000 | 117 500 | ② |

Subject to change

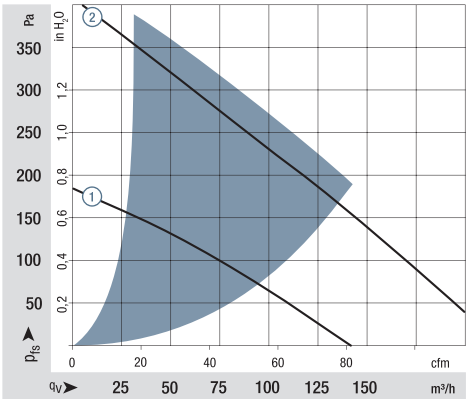


Air performance measured according to: ISO 5801.
Installation category A, without contact protection.
Noise: Total sound power level $L_{WA}$ ISO 10302 measured on a hemisphere with a radius of 2 m.
Sound pressure level $L_{pA}$ measured at 1 m distance from fan axis.
The values given are applicable only under the specified measuring conditions and may differ depending on the installation conditions.
In the event of deviation from the standard configuration, the parameters must be checked after installation!
For detailed information see
http://www.ebmpapst.com/general conditions

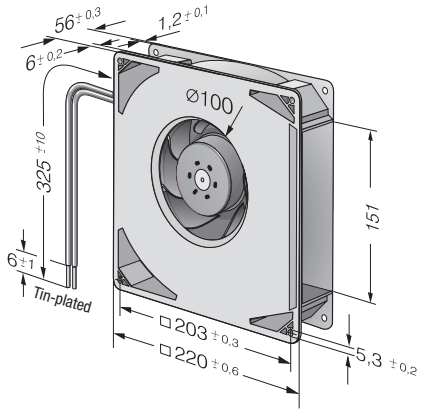

Max. 444 m³/h

# DC centrifugal fans

☐ 220 x 56 mm

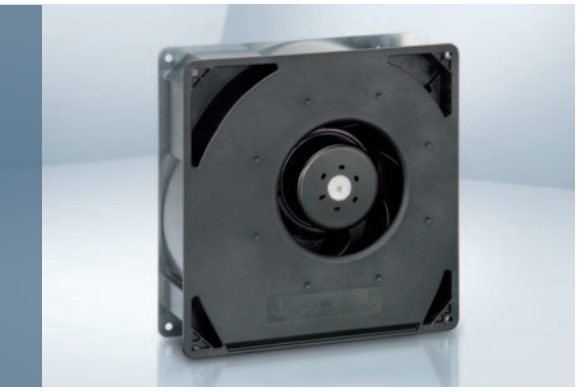

- **Material:** Scroll housing: GRP[1)]
  Impeller: GRP[1)]
  Base plate: Sheet steel
- **Direction of air flow:** Axial: Intake,
  Centrifugal: Exhaust
- **Connection:** Via single wires AWG 22, TR 64
  48 V model: Flat plug
  6.3 x 0.8 mm for ground conductor
- **Highlights:** Smoothly operating 3-phase fan drive
  Backward-curved impeller
- **Weight:** 1.4 kg

1) Fiberglass-reinforced plastic

- **Possible special versions:**
  (See chapter DC fans - specials)
  - Speed signal
  - Go / NoGo alarm
  - Alarm with speed limit
  - External temperature sensor
  - Internal temperature sensor
  - PWM control input
  - Analog control input
  - Humidity protection
  - Degree of protection: IP 54

Series RG 160 NTD
VCS0160YULCS

**Nominal data**

| | Type | Air flow m³/h | Air flow cfm | **Nominal voltage** VDC | Voltage range VDC | Sound power level Bel(A) | Sintec sleeve bearings / Ball bearings □/■ | Power consumption Watts | Nominal speed rpm⁻¹ | Temperature range °C | Service life $L_{10}$ (40 °C) ebm-papst standard / Service life $L_{10}$ ($T_{max}$) ebm-papst standard Hours | Life expectancy $L_{10IPC}$ (40 °C) see page 15 Hours | Curve |
|---|---|---|---|---|---|---|---|---|---|---|---|---|---|
| Min. | RG 160-28/14 NTD... | 59 | 34.7 | **24** | 16...28 | — | ■ | 2.0 | 800 | -20...+60 | 55 000 / 35 000 | 92 500 | ① |
| Max. | | 308 | 181 | | | 7.5 | | 64 | 4 200 | | | | ② |
| | RG 160-28/14 NTD | 308 | 181 | **24** | 16...28 | 7.5 | ■ | 64 | 4 200 | -20...+60 | 55 000 / 35 000 | 92 500 | ② |
| | RG 160-28/14 NTDH | 370 | 218 | **24** | 16...28 | 7.8 | ■ | 101 | 5 000 | -20...+60 | 50 000 / 32 500 | 85 000 | ③ |
| Min. | RG 160-28/18 NTD... | 59 | 34.7 | **48** | 38...57 | — | ■ | 2.0 | 800 | -20...+70 | 55 000 / 27 500 | 92 500 | ① |
| Max. | | 308 | 181 | | | 7.5 | | 59 | 4 200 | | | | ② |
| | RG 160-28/18 N/2 TDHHP* | 444 | 261 | **48** | 36...60 | 8.5 | ■ | 159 | 6 000 | -20...+65 | 40 000 / 22 500 | 67 500 | ④ |

Subject to change

Models RG 160-28/14 NTD... and RG 160-28/18 NTD... are available in customer-specific, custom-developed variants only.
The figures indicated are technically feasible benchmark values.
The fans can be specially adapted to your application with signal outputs and control inputs.
*The specific service life is valid when an external capacitor is wired between the positive and negative wires.
Please note the wiring suggestion.

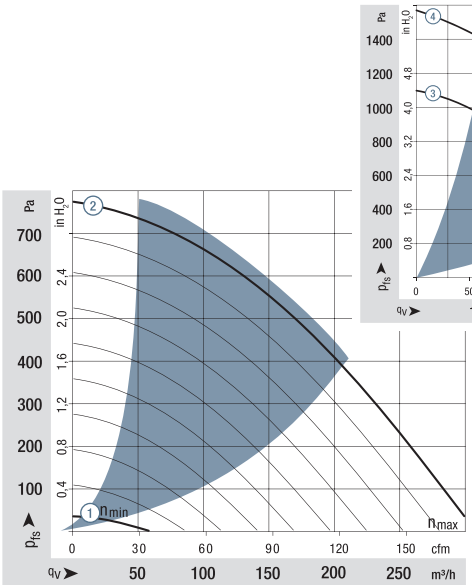


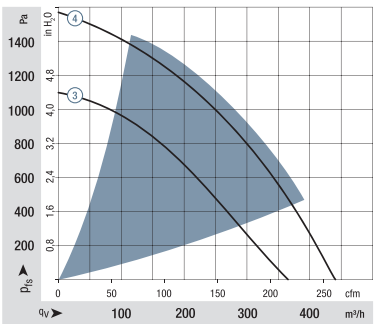


Air performance measured according to: ISO 5801.
Installation category A, without contact protection.
Noise: Total sound power level $L_{WA}$ ISO 10302 measured on a hemisphere with a radius of 2 m.
Sound pressure level $L_{pA}$ measured at 1 m distance from fan axis.
The values given are applicable only under the specified measuring conditions and may differ depending on the installation conditions.
In the event of deviation from the standard configuration, the parameters must be checked after installation!
For detailed information see http://www.ebmpapst.com/general conditions

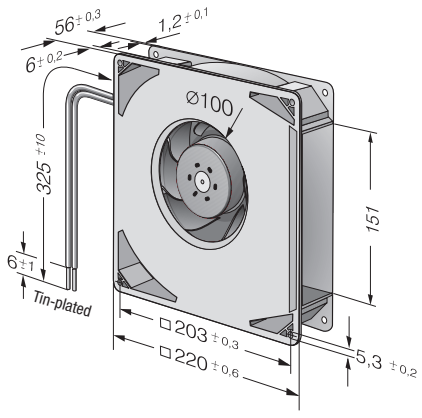




ebmpapst

Max. 930 m³/h

S-Force

# DC centrifugal fans – RadiCal

☐ 226 x 85 mm

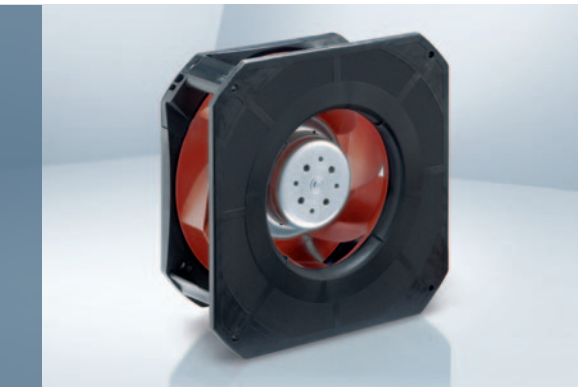

- **Material:** Scroll housing: GRP[1)]
  Impeller: GRP[1)]
- **Direction of air flow:** Axial: Intake,
  Centrifugal: Exhaust
- **Direction of rotation:** Clockwise, looking towards rotor
- **Connection:** via single wires AWG 18, 20 or AWG 22, TR 64. Speed signal and control input AWG 22
- **Highlights:** Highly efficient and smoothly operating 3-phase fan drive
  Backward-curved RadiCal impeller
- **Weight:** 1210 g

1) Fiberglass-reinforced plastic

- **Possible special versions:**
  (See chapter DC fans - specials)
  - Speed signal
  - Go / NoGo alarm
  - Alarm with speed limit
  - External temperature sensor
  - Internal temperature sensor
  - PWM control input
  - Analog control input
  - Multi-option control input
  - Moisture protection
  - Salt spray protection
  - Degree of protection: IP 54

Series RG 190 TD
VCS0190RULDS

**Nominal data**

| Type | Air flow m³/h | Air flow cfm | Nominal voltage VDC | Voltage range VDC | Sound power level Bel(A) | Sintec sleeve bearings □ / Ball bearings ■ | Power consumption Watts | Nominal speed rpm⁻¹ | Temperature range °C | Service life $L_{10}$ (40 °C) ebm-papst standard Hours | Service life $L_{10}$ ($T_{max}$) ebm-papst standard Hours | Life expectancy $L_{10IPC}$ (40 °C) see page 15 Hours | Curve |
|---|---|---|---|---|---|---|---|---|---|---|---|---|---|
| RG 190-39/14/2 TDMLO | 630 | 371 | **24** | 16...30 | 7.3 | ■ | 55 | 3 000 | -20...+60 | 55 000 | 35 000 | 92 500 | ① |
| RG 190-39/14/2 TDMO | 820 | 482 | **24** | 16...36 | 7.9 | ■ | 113 | 3 900 | -20...+65 | 52 500 | 30 000 | 87 500 | ② |
| RG 190-39/18/2 TDMLO | 630 | 371 | **48** | 36...57 | 7.3 | ■ | 58 | 3 000 | -20...+60 | 55 000 | 35 000 | 92 500 | ① |
| RG 190-39/18/2 TDMO | 820 | 482 | **48** | 36...72 | 7.9 | ■ | 113 | 3 900 | -20...+65 | 52 500 | 30 000 | 87 500 | ② |
| RG 190-39/18/2 TDO | 930 | 547 | **48** | 36...72 | 8.3 | ■ | 140 | 4 400 | -20...+65 | 40 000 | 22 500 | 67 500 | ③ |

Subject to change

Speed control range from 800 rpm⁻¹ at 7 % PWM up to nominal speed at > 90 % PWM. Standstill at 0 % PWM,
Standstill if control cable is interrupted.

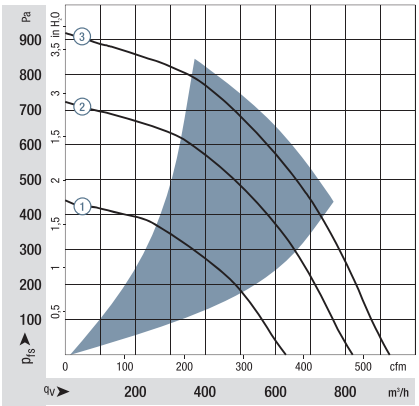


Air performance measured according to: ISO 5801.
Installation category A, without contact protection.
Noise: Total sound power level $L_{WA}$ ISO 10302 measured on a hemisphere with a radius of 2 m.
Sound pressure level $L_{pA}$ measured at 1 m distance from fan axis.
The values given are applicable only under the specified measuring conditions and may differ depending on the installation conditions.
In the event of deviation from the standard configuration, the parameters must be checked after installation!
For detailed information see
http://www.ebmpapst.com/general conditions

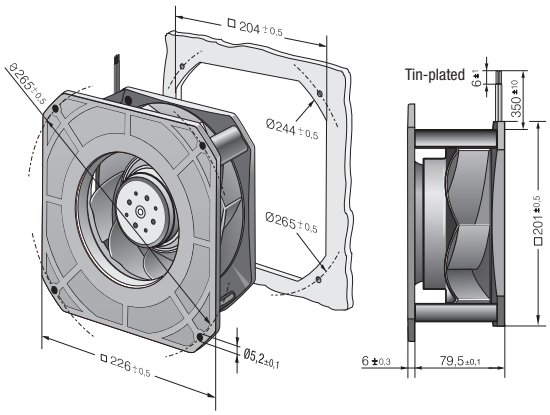

Max. 1100 m³/h

S-Force

# DC centrifugal fans – RadiCal

☐ 270 x 99 mm

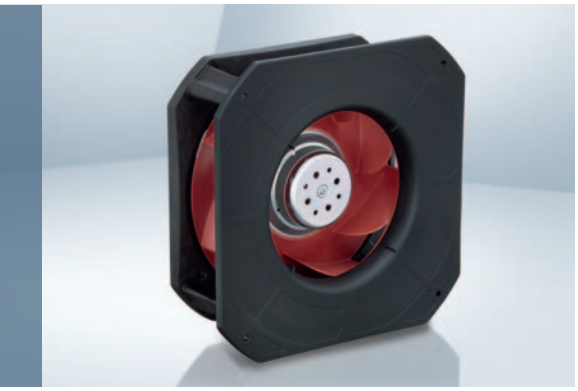

- **Material:** Scroll housing: GRP[1)]
  Impeller: GRP[1)]
- **Direction of air flow:** Axial: Intake,
  Centrifugal: Exhaust
- **Direction of rotation:** Clockwise,
  looking towards rotor
- **Connection:** via single wires AWG 18, 20 or AWG 22, TR 64. Speed signal and control input AWG 22
- **Highlights:** Highly efficient and smoothly operating 3-phase fan drive
  Backward-curved impeller
- **Weight:** 1560 g

1) Fiberglass-reinforced plastic

- **Possible special versions:**
  (See chapter DC fans - specials)
  - Speed signal
  - Go / NoGo alarm
  - Alarm with speed limit
  - External temperature sensor
  - Internal temperature sensor
  - PWM control input
  - Analog control input
  - Humidity protection
  - Salt spray protection
  - Degree of protection: IP 54

Series RG 220 TD
VCS0220RULDS

**Nominal data**

| Type | Air flow m³/h | Air flow cfm | **Nominal voltage** VDC | Voltage range VDC | Sound power level Bel(A) | Sintec sleeve bearings / Ball bearings □/■ | Power consumption Watts | Nominal speed rpm⁻¹ | Temperature range °C | Service life $L_{10}$ (40 °C) ebm-papst standard / Service life $L_{10}$ ($T_{max}$) ebm-papst standard Hours | Life expectancy $L_{10IPC}$ (40 °C) see page 15 Hours | Curve |
|---|---|---|---|---|---|---|---|---|---|---|---|---|
| RG 220-43/14/2 TDM0 | 1100 | 647 | **24** | 16...36 | 7.5 | ■ | 101 | 3 000 | -20...+55 | 55 000 / 40 000 | 92 500 | ① |
| RG 220-43/18/2 TDM0* | 1100 | 647 | **48** | 36...72 | 7.5 | ■ | 101 | 3 000 | -20...+55 | 55 000 / 40 000 | 92 500 | ① |

Subject to change

* On request

Speed control range from 800 rpm⁻¹ at 7 % PWM up to nominal speed at > 90 % PWM.
Standstill at 0 % PWM, Standstill if control cable is interrupted.
Further types available on request.

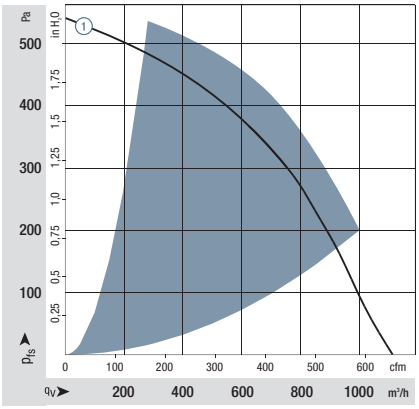


Air performance measured according to: ISO 5801.
Installation category A, without contact protection.
Noise: Total sound power level $L_{WA}$ ISO 10302 measured on a hemisphere with a radius of 2 m.
Sound pressure level $L_{pA}$ measured at 1 m distance from fan axis.
The values given are applicable only under the specified measuring conditions and may differ depending on the installation conditions.
In the event of deviation from the standard configuration, the parameters must be checked after installation!
For detailed information see
http://www.ebmpapst.com/general conditions

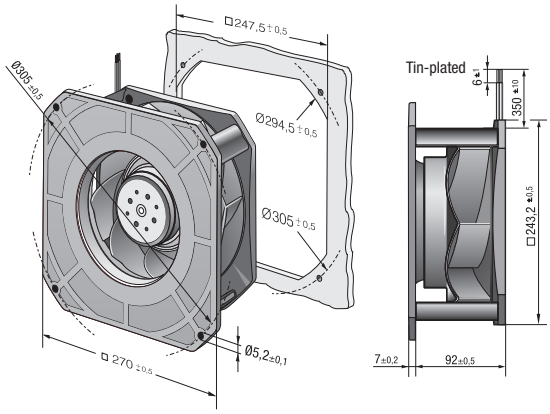

Max. 1450 m³/h

S-Force

# DC centrifugal fans – RadiCal

☐ 270 x 119 mm

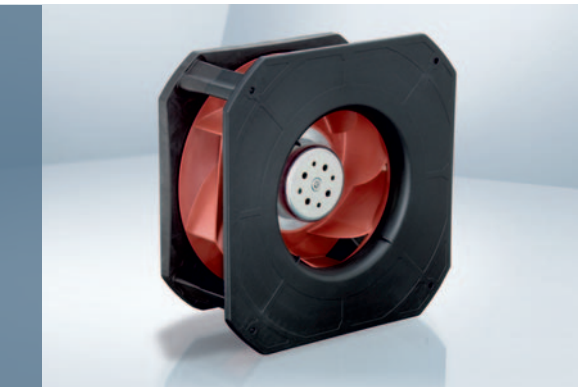

- **Material:** Scroll housing: GRP[1)]
  Impeller: GRP[1)]
- **Direction of air flow:** Axial: Intake, Centrifugal: Exhaust
- **Direction of rotation:** Clockwise, looking towards rotor
- **Connection:** via single wires AWG 18, 20 or AWG 22, TR 64. Speed signal and control input AWG 22
- **Highlights:** Highly efficient and smoothly operating 3-phase fan drive Backward-curved RadiCal impeller
- **Weight:** 1750 g

1) Fiberglass-reinforced plastic

- **Possible special versions:**
  (See chapter DC fans - specials)
  - Speed signal
  - Go / NoGo alarm
  - Alarm with speed limit
  - External temperature sensor
  - Internal temperature sensor
  - PWM control input
  - Analog control input
  - Humidity protection
  - Salt spray protection
  - Degree of protection: IP 54

Series RG 225 TD
VCS0225RULDS

| Nominal data | Air flow | Air flow | Nominal voltage | Voltage range | Sound power level | Sintec sleeve bearings / Ball bearings | Power consumption | Nominal speed | Temperature range | Service life $L_{10}$ (40 °C) ebm-papst standard / Service life $L_{10}$ ($T_{max}$) ebm-papst standard | Life expectancy $L_{10IPC}$ (40 °C) see page 15 | Curve |
|---|---|---|---|---|---|---|---|---|---|---|---|---|
| **Type** | **m³/h** | **cfm** | **VDC** | **VDC** | **Bel(A)** | **□/■** | **Watts** | **rpm⁻¹** | **°C** | **Hours** | **Hours** | |
| RG 225-55/14/2 TDML0 | 1090 | 641 | **24** | 16...36 | 7.4 | ■ | 80 | 2 500 | -20...+65 | 52 500 / 30 000 | 87 500 | ① |
| RG 225-55/18/2 TDM0 | 1210 | 712 | **48** | 36...72 | 7.9 | ■ | 116 | 2 800 | -20...+55 | 55 000 / 40 000 | 92 500 | ② |
| RG 225-55/18/2 TD0 | 1450 | 853 | **48** | 36...60 | 8.1 | ■ | 192 | 3 300 | -20...+40 | 30 000 / 30 000 | 50 000 | ③ |

Subject to change

Speed control range from 800 rpm⁻¹ at 7 % PWM up to nominal speed at > 90 % PWM. Standstill at 0 % PWM, Standstill if control cable is interrupted.
The specific service life is valid when an external capacitor is wired between the positive and negative wires.
Please note the wiring suggestion.

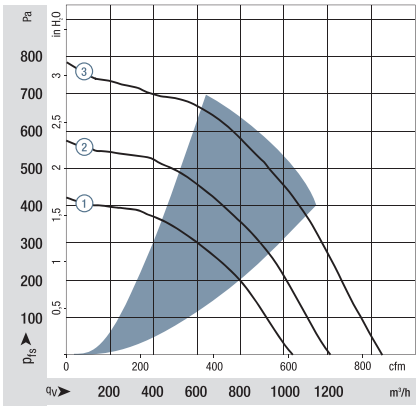


Air performance measured according to: ISO 5801.
Installation category A, without contact protection.
Noise: Total sound power level $L_{WA}$ ISO 10302 measured on a hemisphere with a radius of 2 m.
Sound pressure level $L_{pA}$ measured at 1 m distance from fan axis.
The values given are applicable only under the specified measuring conditions and may differ depending on the installation conditions.
In the event of deviation from the standard configuration, the parameters must be checked after installation!
For detailed information see
http://www.ebmpapst.com/general conditions

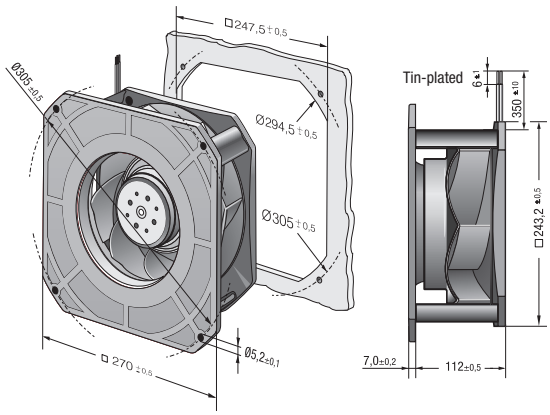

Max. 94 m³/h

S-Force

# DC centrifugal fans

Ø 85 x 68 mm



- **Material:** Impeller: Galvanized sheet steel
- **Direction of air flow:** Axial: Intake, Centrifugal: Exhaust
- **Direction of rotation:** Clockwise, looking towards rotor
- **Connection:** via single wires AWG 18, 20 or AWG 22, TR 64.
- **Highlights:** 3-phase fan drive with special commutation electronic for extremely low-noise operation
  Forwards-curved impeller
  Fan requires a scroll housing
- **Weight:** 450 g

- **Possible special versions:**
  (See chapter DC fans - specials)
  - Speed signal
  - Go / No-go alarm
  - Alarm with limit speed
  - External temperature sensor
  - PWM control input
  - Analogue control input
  - Multi-option control input (0)
  - Protection against moisture

Series RET 85 TD
VFS0085XUJCS

**Nominal data**

| Type | Air flow m³/h | Air flow cfm | **Nominal voltage VDC** | Voltage range VDC | Sound power level Bel(A) | Sintec sleeve bearings / Ball bearings □/■ | Power consumption Watts | Nominal speed rpm⁻¹ | Temperature range °C | Service life $L_{10}$ (40 °C) ebm-papst standard / Service life $L_{10}$ ($T_{max}$) ebm-papst standard Hours | Life expectancy $L_{10IPC}$ (40 °C) see page 15 Hours | Curve |
|---|---|---|---|---|---|---|---|---|---|---|---|---|
| RET 85-42/14/2 TDLOR-402 | 94 | 55 | **24** | 20...28 | 5.6 | ■ | 11.3 | 2 850 | -20...+60 | 62 500 / 40 000 | 105 000 | ① |

Subject to change

All nominal data were measured in the scroll housing.

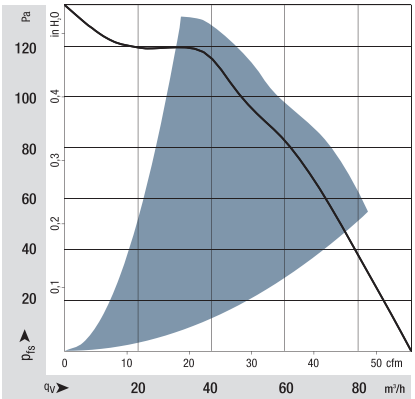


Air performance measured according to: ISO 5801.
Installation category A, without contact protection.
Noise: Total sound power level $L_{WA}$ ISO 10302 measured on a hemisphere with a radius of 2 m.
Sound pressure level $L_{pA}$ measured at 1 m distance from fan axis.
The values given are applicable only under the specified measuring conditions and may differ depending on the installation conditions.
In the event of deviation from the standard configuration, the parameters must be checked after installation!
For detailed information see http://www.ebmpapst.com/general conditions

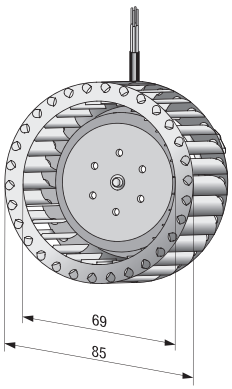


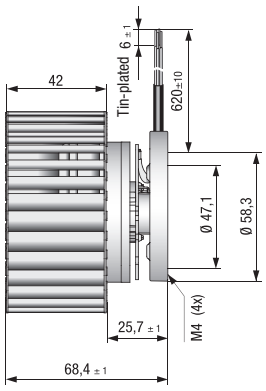

Max. 220 m³/h

S-Force

# DC centrifugal fans

Ø 97 x 41 mm



- **Material:** Impeller: Galvanized sheet steel
- **Direction of air flow:** Axial: Intake, Centrifugal: Exhaust
- **Direction of rotation:** Clockwise, looking towards rotor
- **Connection:** via single wires AWG 18, 20 or AWG 22, TR 64. Speed signal and control input AWG 22
- **Highlights:** Highly efficient and smoothly operating 3-phase fan drive, Forward-curved impeller, Fan requires a scroll housing
- **Weight:** 430 g

- **Possible special versions:**
(See chapter DC fans - specials)
  - Speed signal
  - Go / NoGo alarm
  - Alarm with speed limit
  - External temperature sensor
  - Internal temperature sensor
  - PWM control input
  - Analog control input
  - Moisture protection

Series RET 97 TD
VFS0097XUJCS

**Nominal data**

| Type | Air flow m³/h | Air flow cfm | Nominal voltage VDC | Voltage range VDC | Sound power level Bel(A) | Sintec sleeve bearings / Ball bearings □/■ | Power consumption Watts | Nominal speed rpm⁻¹ | Temperature range °C | Service life $L_{10}$ (40 °C) ebm-papst standard / Service life $L_{10}$ ($T_{max}$) ebm-papst standard Hours | Life expectancy $L_{10IPC}$ (40 °C) see page 15 Hours | Curve |
|---|---|---|---|---|---|---|---|---|---|---|---|---|
| RET 97-25/14/2 TDP | 220 | 129 | **24** | 16...32 | 8.1 | ■ | 135 | 6 000 | -20...+60 | 80 000 / 50 000 | 135 000 | ① |
| RET 97-25/18/2 TDP | 220 | 129 | **48** | 36...60 | 8.1 | ■ | 160 | 6 000 | -20...+60 | 80 000 / 50 000 | 135 000 | ① |

Subject to change

Speed control range from 800 rpm⁻¹ at 7 % PWM up to nominal speed at > 90 % PWM.
Standstill at 0 % PWM, maximum speed if control cable is interrupted.
To attain the specified service life, an external capacitor must be wired between the positive and negative wires. Please note the wiring suggestion.
All nominal data were measured in the scroll housing.

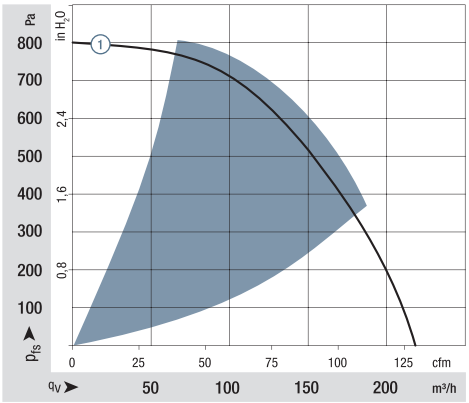


Air performance measured according to: ISO 5801.
Installation category A, with ebm-papst scroll housing without contact protection.
Noise: Total sound power level $L_{WA}$ ISO 10302 measured on a hemisphere with a radius of 2 m.
Sound pressure level $L_{pA}$ measured at 1 m distance from fan axis.
The values given are applicable only under the specified measuring conditions and may differ depending on the installation conditions.
In the event of deviation from the standard configuration, the parametersmust be checked after installation!
For detailed information see
http://www.ebmpapst.com/general conditions

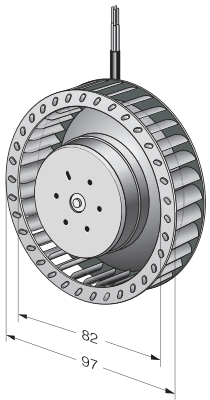


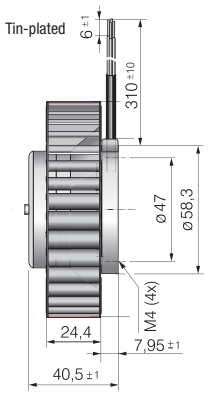

Max. 104 m³/h

# DC centrifugal fans

## Ø 104 x 25 mm

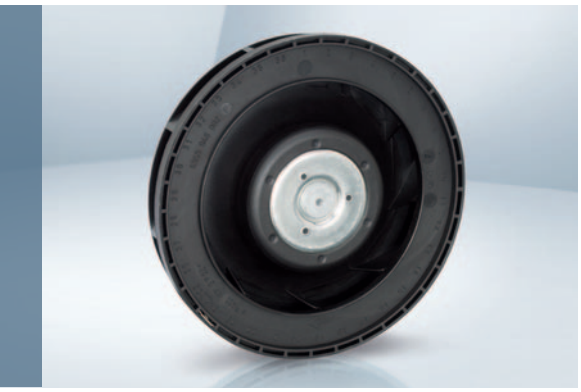

- **Material:** Impeller: GRP[1)]
- **Direction of air flow:** Axial: Intake, Centrifugal: Exhaust
- **Direction of rotation:** Clockwise, looking towards rotor
- **Connection:** via single wires AWG 22, TR 64
- **Highlights:** Backward-curved impeller
- **Weight:** 160 g

- **Possible special versions:**
  (See chapter DC fans - specials)
  - Speed signal
  - Go / NoGo alarm
  - Alarm with speed limit
  - External temperature sensor
  - Internal temperature sensor
  - PWM control input
  - Analog control input
  - Moisture protection
  - Degree of protection: IP 54

1) Fiberglass-reinforced plastic

| Series REF 100<br>VBS0104XUGBS<br>**Nominal data** | Air flow | Air flow | **Nominal voltage** | Voltage range | Sound power level | Sintec sleeve bearings<br>Ball bearings | Power consumption | Nominal speed | Temperature range | Service life $L_{10}$ (40 °C)<br>ebm-papst standard<br>Service life $L_{10}$ ($T_{max}$)<br>ebm-papst standard | Life expectancy $L_{10IPC}$<br>(40 °C) see page 15 | Curve |
|---|---|---|---|---|---|---|---|---|---|---|---|---|
| **Type** | **m³/h** | **cfm** | **VDC** | **VDC** | **Bel(A)** | □/■ | **Watts** | **rpm⁻¹** | **°C** | **Hours** | **Hours** | |
| REF 100-11/12 | 86 | 50.6 | **12** | 8...15 | 6.3 | ■ | 7.5 | 5 400 | -20...+75 | 80 000 / 30 000 | 135 000 | ① |
| REF 100-11/14 | 86 | 50.6 | **24** | 16...30 | 6.3 | ■ | 7.5 | 5 400 | -20...+75 | 80 000 / 30 000 | 135 000 | ① |
| REF 100-11/18/2 | 86 | 50.6 | **48** | 36...60 | 6.3 | ■ | 8.2 | 5 400 | -20...+75 | 80 000 / 30 000 | 135 000 | ① |
| REF 100-11/18 H | 104 | 61.2 | **48** | 36...56 | 6.9 | ■ | 14.8 | 6 700 | -20...+70 | 67 500 / 32 500 | 115 000 | ② |

Subject to change

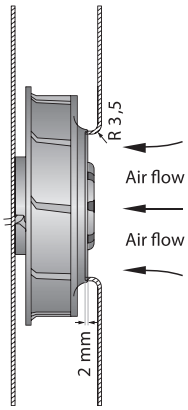


The air flow and sound level of the centrifugal fans without external housing depend on their individual installation conditions.
The stated air flow and sound level were recorded under the following measurement parameters:
Centrifugal fan mounted on a foundation plate 127 x 127 mm.
Cover plate 127 x 127 mm, with an air inlet opening Ø 70 mm, arranged concentrically to the impeller.

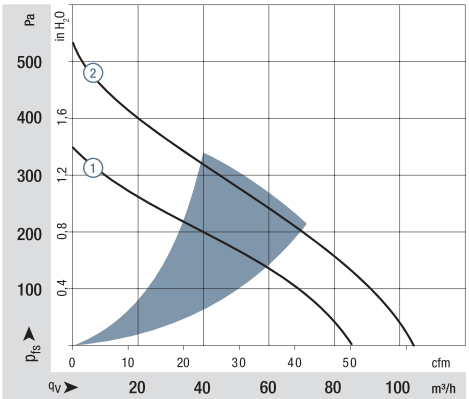


Air performance measured according to: ISO 5801.
Installation category A, with ebm-papst inlet ring without contact protection.
Noise: Total sound power level $L_{WA}$ ISO 10302 measured on a hemisphere with a distance of 2 m;
Sound pressure level $L_{pA}$ measured at 1 m distance from fan axis.
The values given are applicable only under the specified measuring conditions and may differ depending on the installation conditions.
In the event of deviation from the standard configuration, the parameters must be checked after installation!
For detailed information see
http://www.ebmpapst.com/general conditions

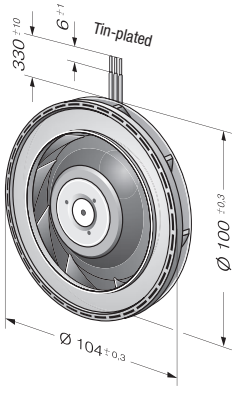


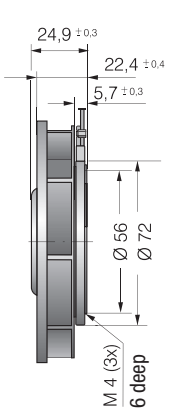




ebmpapst

Max. 190 m³/h

# DC centrifugal fans

## Ø 101 x 52 mm

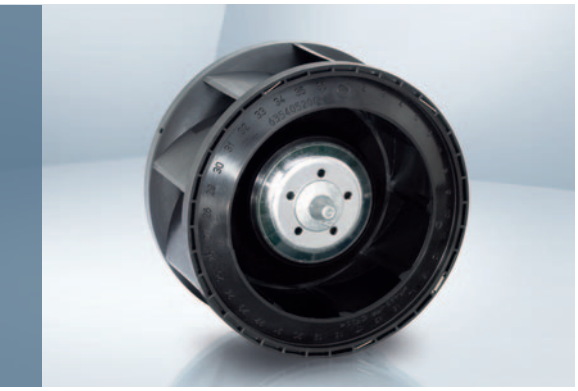

- **Material:** Impeller: GRP[1)]
- **Direction of air flow:** Axial: Intake, Centrifugal: Exhaust
- **Direction of rotation:** Clockwise, looking towards rotor
- **Connection:** via single wires AWG 22, TR 64
- **Highlights:** Backward-curved impeller
- **Weight:** 305 g

- **Possible special versions:**
  (See chapter DC fans - specials)
  - Speed signal
  - Go / NoGo alarm
  - Alarm with speed limit
  - External temperature sensor
  - Internal temperature sensor
  - PWM control input
  - Analog control input
  - Moisture protection

1) Fiberglass-reinforced plastic

Series RER 101 N
VBS0101XUGDS

**Nominal data**

| Type | Air flow m³/h | Air flow cfm | Nominal voltage VDC | Voltage range VDC | Sound power level Bel(A) | Sintec sleeve bearings □ / Ball bearings ■ | Power consumption Watts | Nominal speed rpm⁻¹ | Temperature range °C | Service life $L_{10}$ (40 °C) ebm-papst standard / Service life $L_{10}$ ($T_{max}$) ebm-papst standard Hours | Life expectancy $L_{10IPC}$ (40 °C) see page 15 Hours | Curve |
|---|---|---|---|---|---|---|---|---|---|---|---|---|
| RER 101-36/12 NH | 162 | 95 | **12** | 9...13.6 | 6.9 | ■ | 13.0 | 5 000 | -20...+70 | 65 000 / 32 500 | 110 000 | ② |
| RER 101-36/12 NHH | 190 | 112 | **12** | 9...13.6 | 7.2 | ■ | 20.5 | 6 000 | -20...+70 | 60 000 / 30 000 | 102 500 | ① |
| RER 101-36/14 NHH | 190 | 112 | **24** | 18...27.2 | 7.2 | ■ | 22.5 | 6 050 | -20...+70 | 60 000 / 30 000 | 102 500 | ① |
| RER 101-36/18 NHH | 190 | 112 | **48** | 36...60 | 7.2 | ■ | 19.4 | 5 850 | -20...+70 | 60 000 / 30 000 | 102 500 | ① |

Subject to change

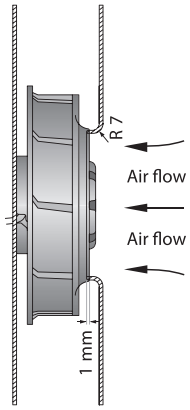


The air flow and sound level of the centrifugal fans without external housing depend on their individual installation conditions.
The stated air flow and sound level were recorded under the following measurement parameters:
Centrifugal fan mounted on a foundation plate 148 x 148 mm.
Cover plate 148 x 148 mm, with an air inlet opening Ø 66 mm, arranged concentrically to the impeller.

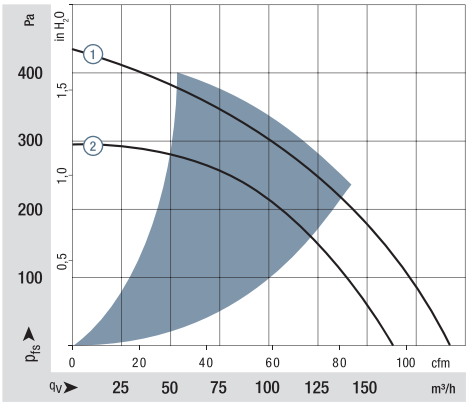


Air performance measured according to: ISO 5801.
Installation category A, with ebm-papst inlet ring without contact protection.
Noise: Total sound power level $L_{WA}$ ISO 10302 measured on a hemisphere with a distance of 2 m;
Sound pressure level $L_{pA}$ measured at 1 m distance from fan axis.
The values given are applicable only under the specified measuring conditions and may differ depending on the installation conditions.
In the event of deviation from the standard configuration, the parameters must be checked after installation!
For detailed information see
http://www.ebmpapst.com/general conditions

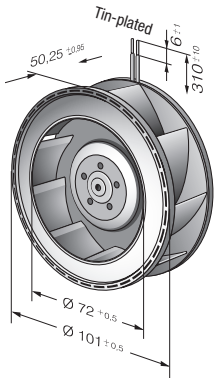


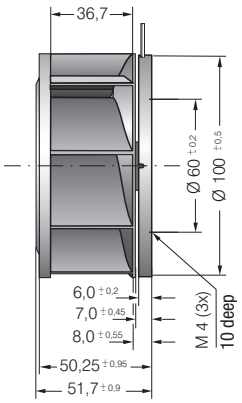

Max. 390 m³/h

S-Force

# DC centrifugal fans

## Ø 120 x 54 mm



- **Material:** Impeller: GRP[1)]
- **Direction of air flow:** Axial: Intake, Centrifugal: Exhaust
- **Direction of rotation:** Clockwise, looking towards rotor
- **Connection:** via single wires AWG 18, 20 or AWG 22, TR 64. Speed signal and control input AWG 22
- **Highlights:** Highly efficient and smoothly operating 3-phase fan drive Backward-curved impeller
- **Weight:** 430 g

1) Fiberglass-reinforced plastic

- **Possible special versions:**
  (See chapter DC fans - specials)
  - Speed signal
  - Go / NoGo alarm
  - Alarm with speed limit
  - External temperature sensor
  - Internal temperature sensor
  - PWM control input
  - Analog control input
  - Moisture protection

Series RER 120 TD
VBS0120XUJCS

| Nominal data | Air flow | Air flow | Nominal voltage | Voltage range | Sound power level | Sintec sleeve bearings / Ball bearings | Power consumption | Nominal speed | Temperature range | Service life $L_{10}$ (40 °C) ebm-papst standard / Service life $L_{10}$ ($T_{max}$) ebm-papst standard | Life expectancy $L_{10IPC}$ (40 °C) see page 15 | Curve |
|---|---|---|---|---|---|---|---|---|---|---|---|---|
| **Type** | **m³/h** | **cfm** | **VDC** | **VDC** | **Bel(A)** | □/■ | **Watts** | **rpm⁻¹** | **°C** | **Hours** | **Hours** | |
| RER 120-26/14/2 TDP | 377 | 222 | **24** | 16...32 | 8.2 | ■ | 78 | 6 100 | -20...+60 | 55 000 / 35 000 | 92 500 | ② |
| RER 120-26/18/2 TDMP | 320 | 188 | **48** | 36...60 | 7.8 | ■ | 51 | 5 200 | -20...+60 | 57 500 / 35 000 | 97 500 | ① |
| RER 120-26/18/2 TDP | 390 | 230 | **48** | 36...60 | 8.3 | ■ | 92 | 6 300 | -20...+60 | 50 000 / 30 000 | 85 000 | ③ |

Subject to change

Speed control range from 800 rpm⁻¹ at 7 % PWM up to nominal speed at > 90 % PWM. Standstill at 0 % PWM, maximum speed if control cable is interrupted.
The specific service life is valid when an external capacitor is wired between the positive and negative wires.
Please note the wiring suggestion.

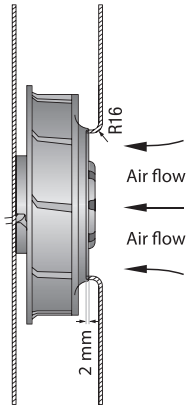


The air flow and sound level of the centrifugal fans without external housing depend on their individual installation conditions.
The stated air flow and sound level were recorded under the following measurement parameters:
Centrifugal fan mounted on a foundation plate 142 x 142 mm.
Cover plate 142 x 142 mm, with an air inlet opening Ø 94.4 mm, arranged concentrically to the impeller.

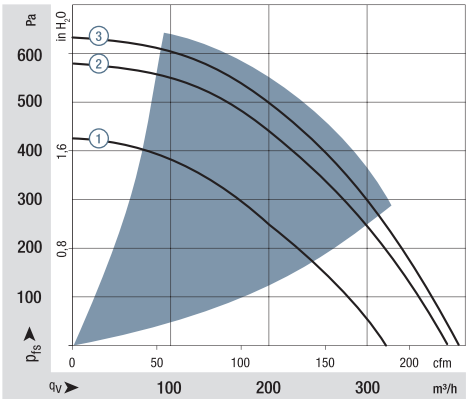


Air performance measured according to: ISO 5801.
Installation category A, with ebm-papst inlet ring without contact protection.
Noise: Total sound power level $L_{WA}$ ISO 10302 measured on a hemisphere with a distance of 2 m;
Sound pressure level $L_{pA}$ measured at 1 m distance from fan axis.
The values given are applicable only under the specified measuring conditions and may differ depending on the installation conditions.
In the event of deviation from the standard configuration, the parameters must be checked after installation!
For detailed information see
http://www.ebmpapst.com/general conditions

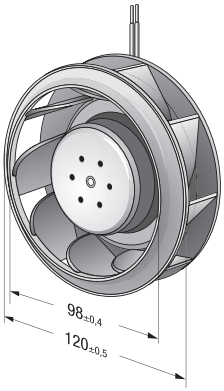


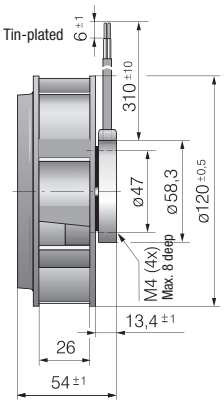




ebmpapst

Max. 250 m³/h

# DC centrifugal fans

## Ø 120 mm



- **Material:** Impeller: PA 6.6 plastic, fiberglass-reinforced
  Rotor: Galvanized
- **Number of blades:** 9
- **Direction of rotation:** Clockwise, looking towards rotor
- **Degree of protection:** IP 20
- **Insulation class:** "B"
- **Installation position:** Any
- **Condensation drainage holes:** None
- **Mode of operation:** Continuous operation (S1)
- **Bearings:** Maintenance-free ball bearings

VBS0120XUJCS

**Nominal data**

| Type | Motor | Curve | Nominal voltage | Nominal voltage range | Air flow | Nominal speed | Power consumption | Input current | Sound pressure level | Admissible amb. temp. | Technical features and connection diagram |
|---|---|---|---|---|---|---|---|---|---|---|---|
| | | | VDC | VDC | m³/h | rpm⁻¹ | W | A | dB(A) | °C | |
| **R1G 120** | M1G 045-BE | Ⓐ | 24 | 16-28 | 250 | 4060 | 26 | 1.20 | 62 | -25..+50 | p. 274 / G) |

Subject to change

**Curves:**

$U_N$ = nominal voltage (24 V /48 V)

$U_R$ = over-voltage (28 V / 57 V)

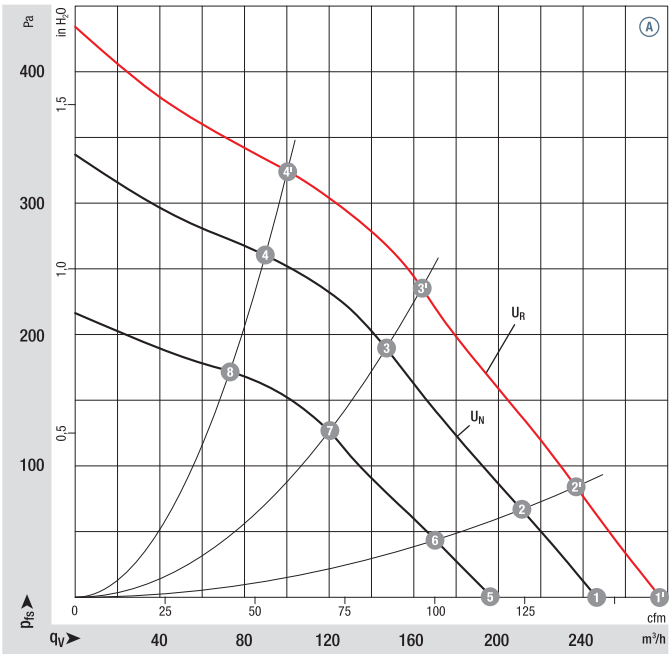


| | | n rpm⁻¹ | $P_{ed}$ W | $Lp_A$ dB(A) | $\eta_{tL}$ % |
|---|---|---|---|---|---|
| Ⓐ | 1' | 4520 | 36 | 65 | — |
| Ⓐ | 2' | 4500 | 36 | 64 | 27 |
| Ⓐ | 3' | 4540 | 36 | 61 | 45 |
| Ⓐ | 4' | 4750 | 32 | 64 | 39 |
| Ⓐ | 1 | 4060 | 26 | 62 | — |
| Ⓐ | 2 | 4000 | 26 | 61 | 27 |
| Ⓐ | 3 | 4050 | 26 | 58 | 45 |
| Ⓐ | 4 | 4200 | 23 | 61 | 39 |
| Ⓐ | 5 | 3270 | 14 | 56 | — |
| Ⓐ | 6 | 3250 | 14 | 55 | 27 |
| Ⓐ | 7 | 3280 | 14 | 53 | 45 |
| Ⓐ | 8 | 3400 | 13 | 56 | 39 |

Air performance measured according to: ISO 5801, Installation category A, with ebm-papst inlet ring without contact protection. Suction-side noise levels: LWA according to ISO 13347, $L_pA$ measured at 1 m distance from fan axis. The values given are applicable only under the specified measuring conditions and may differ depending on the installation conditions. In the event of deviation from the standard configuration, the parameters must be checked after installation! For detailed information see http://www.ebmpapst.com/general conditions



ebmpapst

- **Technical features:** See connection diagram p. 274
- **Cable exit:** Axial
- **Conformity with standard(s):** EN 60950-1
- **Approvals:** EAC





| Centrifugal fans | Weight centrifugal fans kg | Inlet ring (long) |
|---|---|---|
| **R1G 120-AD13 -02** | 0.5 | 96120-2-4013 |

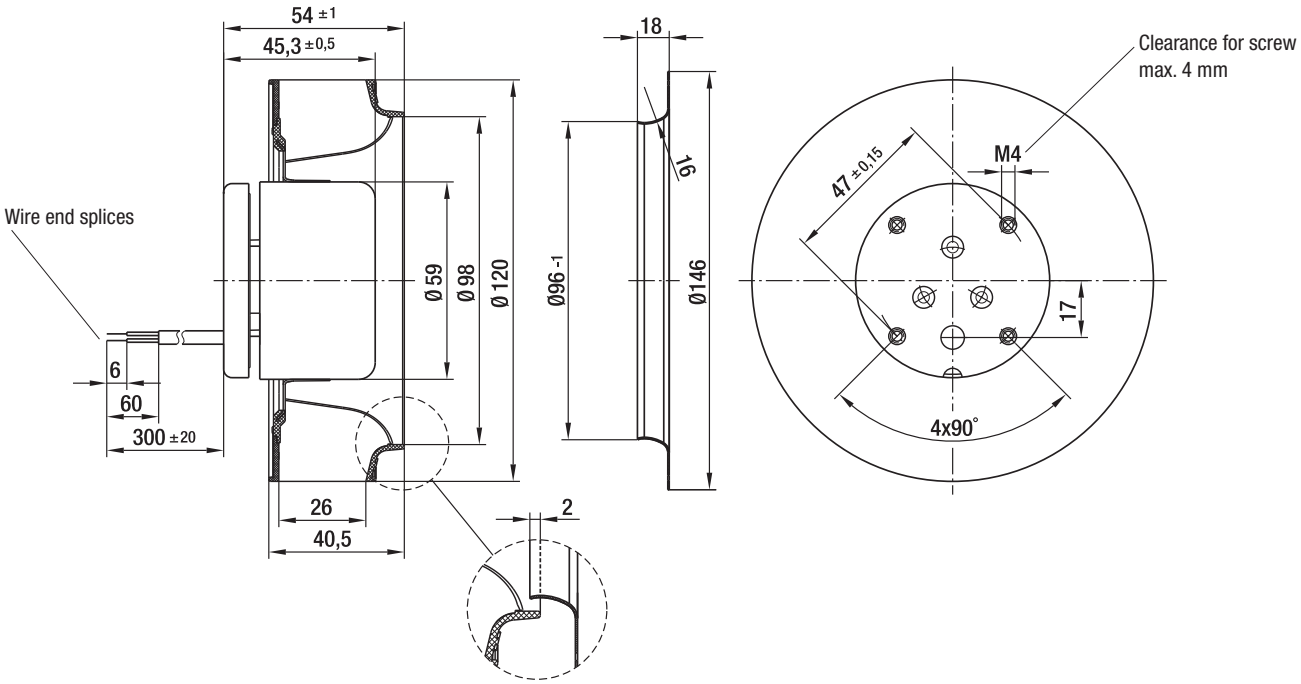

Max. 166 m³/h

# DC centrifugal fans

## Ø 138 x 35 mm

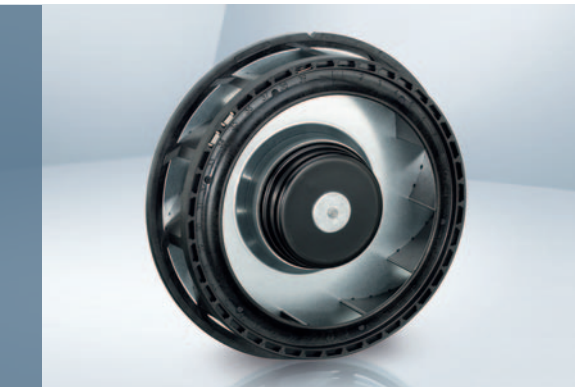

- **Material:** Impeller: GRP[1)]
- **Direction of air flow:** Axial: Intake, Centrifugal: Exhaust
- **Direction of rotation:** Clockwise, looking towards rotor
- **Connection:** via single wires AWG 22, TR 64
- **Highlights:** Backward-curved impeller
- **Weight:** 320 g

- **Possible special versions:**
  (See chapter DC fans - specials)
  - Speed signal
  - Go / NoGo alarm
  - Alarm with speed limit
  - External temperature sensor
  - Internal temperature sensor
  - PWM control input
  - Analog control input
  - Moisture protection
  - Salt spray protection
  - Degree of protection: IP 54 / IP 68

1) Fiberglass-reinforced plastic

Series RER 125 N
VBS0125XUJBS

| Nominal data | Air flow | Air flow | Nominal voltage | Voltage range | Sound power level | Sintec sleeve bearings / Ball bearings | Power consumption | Nominal speed | Temperature range | Service life $L_{10}$ (40 °C) ebm-papst standard / Service life $L_{10}$ ($T_{max}$) ebm-papst standard | Life expectancy $L_{10IPC}$ (40 °C) see page 15 | Curve |
|---|---|---|---|---|---|---|---|---|---|---|---|---|
| **Type** | **m³/h** | **cfm** | **VDC** | **VDC** | **Bel(A)** | **□/■** | **Watts** | **rpm⁻¹** | **°C** | **Hours** | **Hours** | |
| RER 125-19/12 N | 110 | 64.7 | **12** | 7...15 | 5.7 | ■ | 4.6 | 2 650 | -30...+75 | 62 500 / 27 500 | 105 000 | ① |
| RER 125-19/14 N | 110 | 64.7 | **24** | 12...28 | 5.7 | ■ | 4.3 | 2 650 | -30...+75 | 62 500 / 27 500 | 105 000 | ① |
| RER 125-19/14 NH-172 | 166 | 97.7 | **24** | 12...28 | 7.0 | ■ | 13.0 | 4 000 | -20...+70 | 55 000 / 27 500 | 92 500 | ② |
| RER 125-19/18 N | 110 | 64.7 | **48** | 36...56 | 5.7 | ■ | 4.2 | 2 650 | -30...+75 | 62 500 / 27 500 | 105 000 | ① |

Subject to change

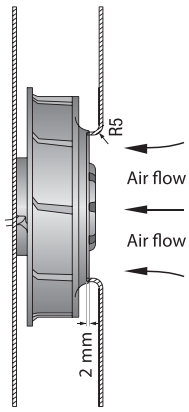


The air flow and sound level of the centrifugal fans without external housing depend on their individual installation conditions.
The stated air flow and sound level were recorded under the following measurement parameters:
Centrifugal fan mounted on a foundation plate 220 x 220 mm.
Cover plate 220 x 220 mm, with an air inlet opening Ø 86 mm, arranged concentrically to the impeller.

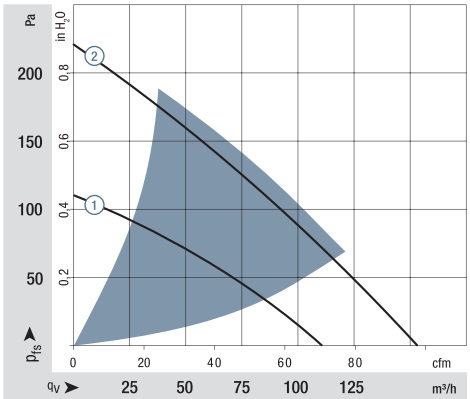


Air performance measured according to: ISO 5801.
Installation category A, with ebm-papst inlet ring without contact protection.
Noise: Total sound power level $L_{WA}$ ISO 10302 measured on a hemisphere with a distance of 2 m;
Sound pressure level $L_{pA}$ measured at 1 m distance from fan axis.
The values given are applicable only under the specified measuring conditions and may differ depending on the installation conditions.
In the event of deviation from the standard configuration, the parameters must be checked after installation!
For detailed information see
http://www.ebmpapst.com/general conditions

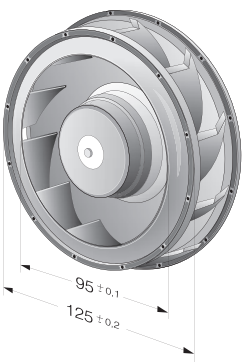


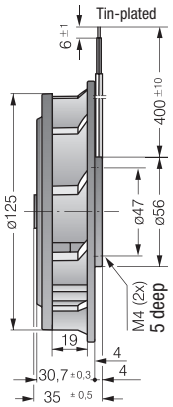




ebmpapst

Max. 565 m³/h

S-Force

# DC centrifugal fans

## Ø 133 x 91 mm



- **Material:** Impeller: GRP[1)]
- **Direction of air flow:** Axial: Intake, Centrifugal: Exhaust
- **Direction of rotation:** Clockwise, looking towards rotor
- **Connection:** via single wires AWG 18, 20 or AWG 22, TR 64. Speed signal and control input AWG 22
- **Highlights:** Highly efficient and smoothly operating 3-phase fan drive Backward-curved impeller
- **Weight:** 890 g 460 g RadiCal

1) Fiberglass-reinforced plastic

- **Possible special versions:** (See chapter DC fans - specials)
  - Speed signal
  - Go / NoGo alarm
  - Alarm with speed limit
  - External temperature sensor
  - Internal temperature sensor
  - PWM control input
  - Analog control input
  - Multi-option control input
  - Moisture protection
  - Salt spray protection
  - Degree of protection: IP 54

Series RER 133 TD
VBS0133XULDS
VBS0133RUJCS

**Nominal data**

| | Type | Air flow m³/h | Air flow cfm | **Nominal voltage** VDC | Voltage range VDC | Sound power level Bel(A) | Sintec sleeve bearings □ / Ball bearings ■ | Power consumption Watts | Nominal speed rpm⁻¹ | Temperature range °C | Service life $L_{10}$ (40 °C) ebm-papst standard Hours | Service life $L_{10}$ ($T_{max}$) ebm-papst standard Hours | Life expectancy $L_{10IPC}$ (40 °C) see page 15 Hours | Curve |
|---|---|---|---|---|---|---|---|---|---|---|---|---|---|---|
| | RER 133-41/14/2 TDMP | 460 | 271 | **24** | 16...30 | 7.8 | ■ | 58 | 5 000 | -20...+65 | 72 500 / 40 000 | | 122 500 | ① |
| | RER 133-41/14/2 TDP | 565 | 332 | **24** | 16...36 | 8.2 | ■ | 90 | 6 000 | -20...+65 | 70 000 / 37 500 | | 117 500 | ② |
| | RER 133-41/18/2 TDP | 565 | 332 | **48** | 36...72 | 8.2 | ■ | 87 | 6 000 | -20...+65 | 70 000 / 37 500 | | 117 500 | ② |
| RadiCal | RER 133-33/18/2 TDMO | 395 | 232 | **48** | 36...60 | 7.7 | ■ | 62 | 5 600 | -20...+65 | 55 000 / 30 000 | | 92 500 | ③ |

Subject to change

Speed control range from 800 rpm⁻¹ at 7 % PWM up to nominal speed at > 90 % PWM.
Standstill at 0 % PWM, maximum speed if control cable is interrupted.

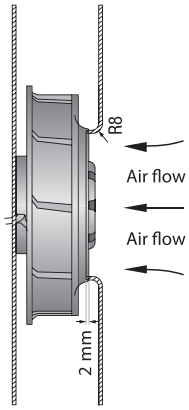


The air flow and sound level of the centrifugal fans without external housing depend on their individual installation conditions.
The stated air flow and sound level were recorded under the following measurement parameters:
Centrifugal fan mounted on a foundation plate 157 x 157 mm.
Cover plate 157 x 157 mm, with an air inlet opening Ø 87 mm, arranged concentrically to the impeller.

RER 133 TD RadiCal

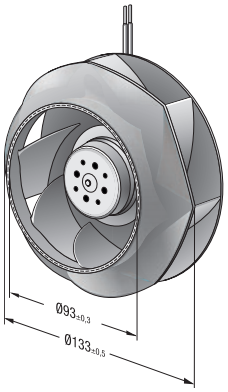


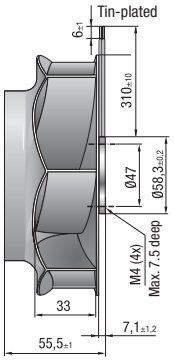


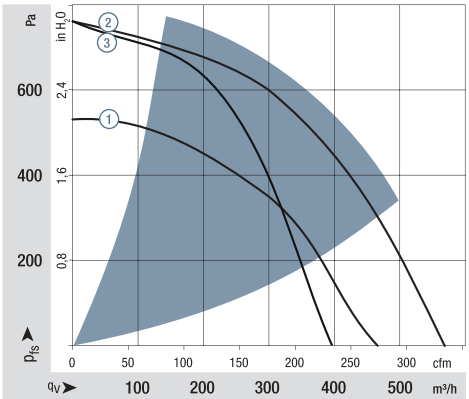


Air performance measured according to: ISO 5801.
Installation category A, with ebm-papst inlet ring without contact protection.
Noise: Total sound power level $L_{WA}$
ISO 10302 measured on a hemisphere with a distance of 2 m;
Sound pressure level $L_{pA}$ measured at 1 m distance from fan axis.
The values given are applicable only under the specified measuring conditions and may differ depending on the installation conditions.
In the event of deviation from the standard configuration, the parameters must be checked after installation!
For detailed information see http://www.ebmpapst.com/general conditions

RER 133 TD

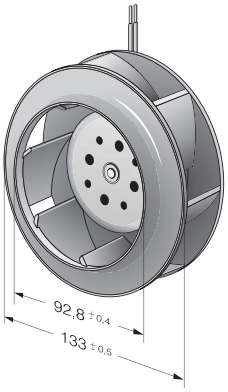


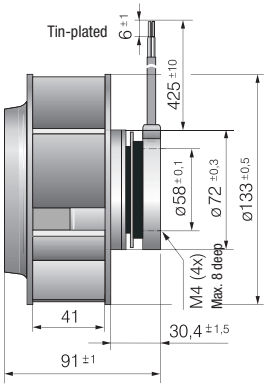

max. 225 m³/h

# DC centrifugal fans

## Ø 140 x 36 mm



- **Material:** Impeller: GRP[1)]
- **Direction of air flow:** Axial: Intake
  Centrifugal: Exhaust
- **Direction of rotation:** Clockwise, seen on rotor
- **Connection:** Via single wires AWG 22, TR 64
- **Highlights:** Backwards-curved impeller
  3-phase fan drive with special commutation electronic for extremely low-noise operation
- **Mass:** 360 g

- **Possible special versions:**
  - Go / No-go alarm
  - Alarm with limit speed
  - External temperature sensor
  - Analogue control input
  - Multi-option control input
  - Protection against moisture
  - Protection against salt fog
  - Type of protection: IP 54

1) Fibreglass-reinforced plastic

Series RER 140 TD
VBS0140XUJCS

**Nominal data**

| Type | Air flow m³/h | Air flow cfm | **Nominal voltage** VDC | Voltage range VDC | Sound power level Bel(A) | Sintec sleeve bearings / Ball bearings □/■ | Power consumption Watts | Nominal speed rpm⁻¹ | Temperature range °C | Service life $L_{10}$ (40 °C) ebm-papst standard / Service life $L_{10}$ ($T_{max}$) ebm-papst standard Hours | Life expectancy $L_{10IPC}$ (40 °C) see page 15 Hours | Curve |
|---|---|---|---|---|---|---|---|---|---|---|---|---|
| RER 140-22/14 N/2TDP | 225 | 132 | **24** | 20...28 | 6.9 | ■ | 34 | 3 850 | -20...+65 | 55 000 / 30 000 | 92 500 | ① |

Subject to change

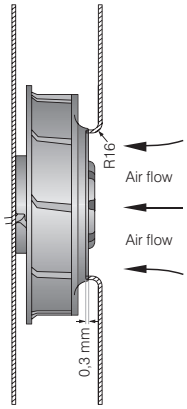


The air flow and sound level of the centrifugal fans without external housing depend on their individual installation conditions.
The stated air flow and sound level were recorded under the following measurement parameters:
Centrifugal fan mounted on a foundation plate 166 x 166 mm.
Cover plate 166 x 166 mm, with an air inlet opening Ø 94.4 mm, arranged concentrically to the impeller.

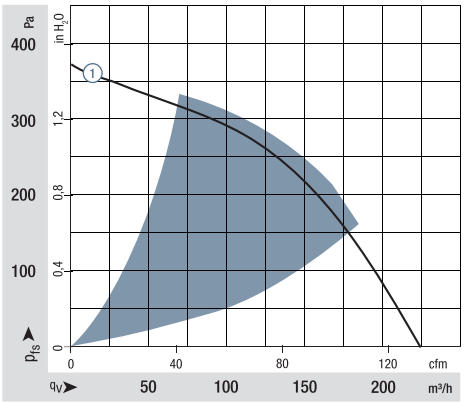


Air performance measured according to: ISO 5801.
Installation category A, with ebm-papst inlet ring without contact protection.
Noise: Total sound power level $L_{WA}$ ISO 10302 measured on a hemisphere with a distance of 2 m;
Sound pressure level $L_{pA}$ measured at 1 m distance from fan axis.
The values given are applicable only under the specified measuring conditions and may differ depending on the installation conditions.
In the event of deviation from the standard configuration, the parameters must be checked after installation!
For detailed information see
http://www.ebmpapst.com/general conditions

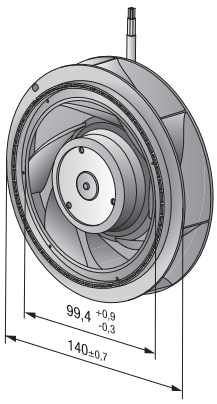


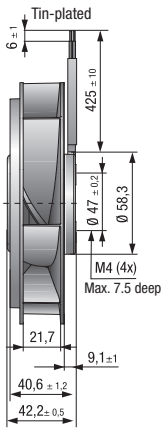




ebmpapst

Max. 255 m³/h

# DC centrifugal fans

## Ø 165 x 51 mm

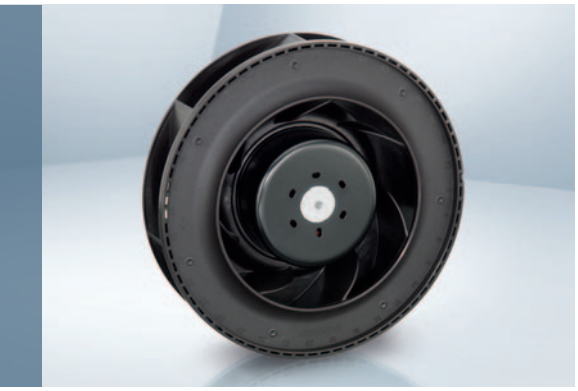

- **Material:** Impeller: GRP[1)]
- **Direction of air flow:** Axial: Intake, Centrifugal: Exhaust
- **Direction of rotation:** Counterclockwise, looking towards rotor
- **Connection:** via single wires AWG 22, TR 64
- **Highlights:** Backward-curved impeller
- **Weight:** 590 g

- **Possible special versions:**
  (See chapter DC fans - specials)
  - Speed signal
  - Go / NoGo alarm
  - Alarm with speed limit
  - External temperature sensor
  - Internal temperature sensor
  - PWM control input
  - Analog control input
  - Moisture protection
  - Salt spray protection
  - Degree of protection: IP 54

1) Fiberglass-reinforced plastic

Series RER 160 N
VBS0160XULCS

**Nominal data**

| Type | Air flow m³/h | Air flow cfm | Nominal voltage VDC | Voltage range VDC | Sound power level Bel(A) | Sintec sleeve bearings / Ball bearings □/■ | Power consumption Watts | Nominal speed rpm⁻¹ | Temperature range °C | Service life $L_{10}$ (40 °C) ebm-papst standard / Service life $L_{10}$ ($T_{max}$) ebm-papst standard Hours | Life expectancy $L_{10IPC}$ (40 °C) see page 15 Hours | Curve |
|---|---|---|---|---|---|---|---|---|---|---|---|---|
| RER 160-28/12 N | 270 | 158.8 | **12** | 7.5...14 | 6.4 | ■ | 19.0 | 3 000 | -20...+70 | 75 000 / 37 500 | 127 500 | ① |
| RER 160-28/14 N | 270 | 158.8 | **24** | 12...28 | 6.4 | ■ | 19.0 | 3 000 | -20...+70 | 75 000 / 37 500 | 127 500 | ① |
| RER 160-28/18 N* | 270 | 158.8 | **48** | 28...60 | 6.4 | ■ | 19.0 | 3 000 | -20...+70 | 75 000 / 37 500 | 127 500 | ① |

Subject to change

* On request

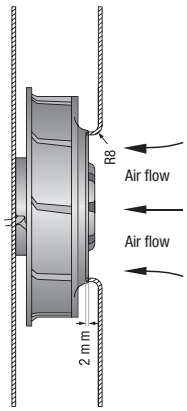


The air flow and sound level of the centrifugal fans without external housing depend on their individual installation conditions.
The stated air flow and sound level were recorded under the following measurement parameters:
Centrifugal fan mounted on a foundation plate 266 x 266 mm.
Cover plate 266 x 266 mm, with an air inlet opening Ø 100 mm, arranged concentrically to the impeller.

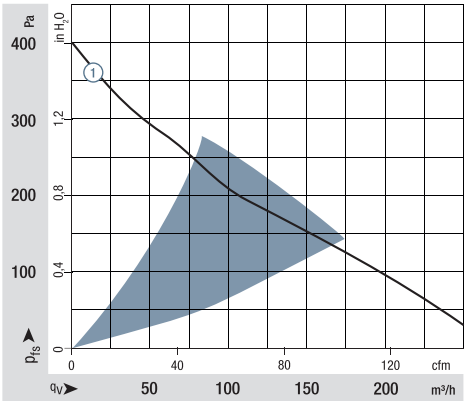


Air performance measured according to: ISO 5801.
Installation category A, with ebm-papst inlet ring without contact protection.
Noise: Total sound power level $L_{WA}$ ISO 10302 measured on a hemisphere with a distance of 2 m;
Sound pressure level $L_{pA}$ measured at 1 m distance from fan axis.
The values given are applicable only under the specified measuring conditions and may differ depending on the installation conditions.
In the event of deviation from the standard configuration, the parameters must be checked after installation!
For detailed information see
http://www.ebmpapst.com/general conditions

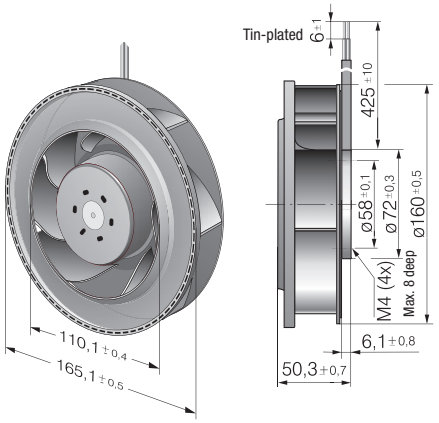

Max. 360 m³/h

S-Force

# DC centrifugal fans

## Ø 165 x 51 mm

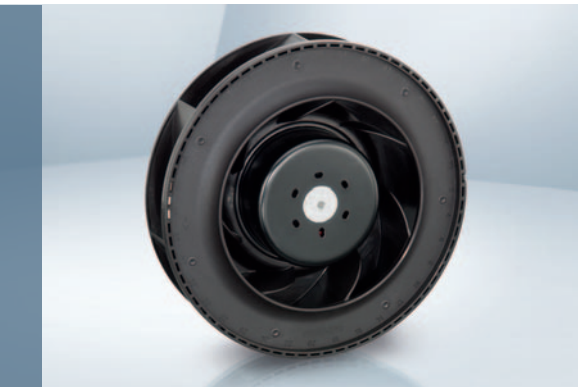

- **Material:** Impeller: GRP[1)]
- **Direction of air flow:** Axial: Intake, Centrifugal: Exhaust
- **Direction of rotation:** Clockwise, looking towards rotor
- **Connection:** via single wires AWG 22, TR 64
- **Highlights:** Highly efficient and smoothly operating 3-phase fan drive, Backward-curved impeller
- **Weight:** 590 g

- **Possible special versions:**
  (See chapter DC fans - specials)
  - Speed signal
  - Go / NoGo alarm
  - Alarm with speed limit
  - External temperature sensor
  - Internal temperature sensor
  - PWM control input
  - Analog control input
  - Humidity protection
  - Degree of protection: IP 54

1) Fiberglass-reinforced plastic

Series RER 160 NTD
VBS0160XULCS

**Nominal data**

| Type | Air flow m³/h | Air flow cfm | **Nominal voltage** VDC | Voltage range VDC | Sound power level Bel(A) | Sintec sleeve bearings □ / Ball bearings ■ | Power consumption Watts | Nominal speed rpm⁻¹ | Temperature range °C | Service life $L_{10}$ (40 °C) ebm-papst standard Hours | Service life $L_{10}$ ($T_{max}$) ebm-papst standard Hours | Life expectancy $L_{10IPC}$ (40 °C) see page 15 Hours | Curve |
|---|---|---|---|---|---|---|---|---|---|---|---|---|---|
| RER 160-28/14 NTD… | 360 | 211 | **24** | 16...28 | 7.4 | ■ | 51 | 4 200 | -20...+60 | 55 000 | 27 500 | 92 500 | ② |
| RER 160-28/18 NTD… | 360 | 211 | **48** | 38...57 | 7.4 | ■ | 48 | 4 200 | -20...+70 | 55 000 | 27 500 | 92 500 | ① |

Subject to change

Model RER 160-28/18 NTD... is available in customer-specific, custom-developed variant only.
The figures indicated are technically feasible benchmark values. The fans can be specially adapted to your application with signal outputs and control inputs.

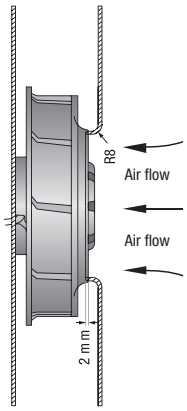


The air flow and sound level of the centrifugal fans without external housing depend on their individual installation conditions.
The stated air flow and sound level were recorded under the following measurement parameters:
Centrifugal fan mounted on a foundation plate 266 x 266 mm.
Cover plate 266 x 266 mm, with an air inlet opening Ø 100 mm, arranged concentrically to the impeller.

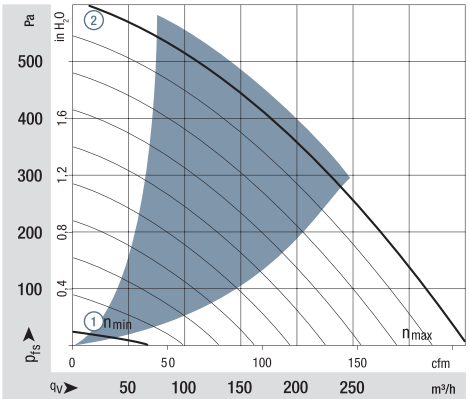


Air performance measured according to: ISO 5801.
Installation category A, with ebm-papst inlet ring without contact protection.
Noise: Total sound power level $L_{WA}$ ISO 10302 measured on a hemisphere with a distance of 2 m; Sound pressure level $L_{pA}$ measured at 1 m distance from fan axis.
The values given are applicable only under the specified measuring conditions and may differ depending on the installation conditions.
In the event of deviation from the standard configuration, the parameters must be checked after installation!
For detailed information see
http://www.ebmpapst.com/general conditions

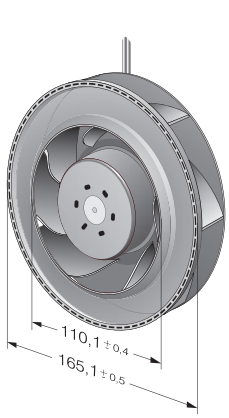


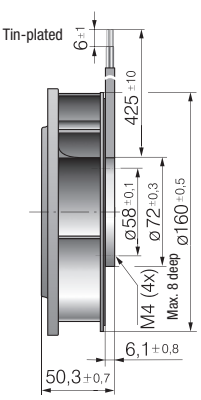




ebmpapst

Max. 800 m³/h

S-Force

# DC centrifugal fans

## Ø 175 x 55 mm



- **Material:** Impeller: Galvanized sheet steel
- **Direction of air flow:** Axial: Intake, Centrifugal: Exhaust
- **Direction of rotation:** Clockwise, looking towards rotor
- **Connection:** via single wires AWG 18, 20 or AWG 22, TR 64. Speed signal and control input AWG 22
- **Highlights:** Highly efficient and smoothly operating 3-phase fan drive Backward-curved impeller
- **Weight:** 930 g

- **Possible special versions:**
(See chapter DC fans - specials)
- Speed signal
- Go / NoGo alarm
- Alarm with speed limit
- External temperature sensor
- Internal temperature sensor
- PWM control input
- Analog control input
- Multi-option control input
- Humidity protection
- Degree of protection: IP 54

Series RER 175 TD
VBS0175XULDS

**Nominal data**

| Type | Air flow m³/h | Air flow cfm | Nominal voltage VDC | Voltage range VDC | Sound power level Bel(A) | Sintec sleeve bearings / Ball bearings □/■ | Power consumption Watts | Nominal speed rpm⁻¹ | Temperature range °C | Service life $L_{10}$ (40 °C) ebm-papst standard / Service life $L_{10}$ ($T_{max}$) ebm-papst standard Hours | Life expectancy $L_{10IPC}$ (40 °C) see page 15 Hours | Curve |
|---|---|---|---|---|---|---|---|---|---|---|---|---|
| REF 175-30/18/2 TDP | 800 | 470 | **48** | 36 ... 72 | 8.3 | ■ | 154 | 4 400 | -20...+60 | 65 000 / 37 500 | 110 000 | ① |

Subject to change

Speed control range from 800 rpm⁻¹ at 7 % PWM up to nominal speed at > 90 % PWM.
Standstill at 0 % PWM, maximum speed if control cable is interrupted.

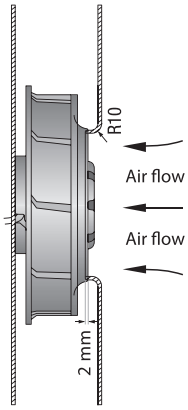


The air flow and sound level of the centrifugal fans without external housing depend on their individual installation conditions.
The stated air flow and sound level were recorded under the following measurement parameters:
Centrifugal fan mounted on a foundation plate 207 x 207 mm.
Cover plate 207 x 207 mm, with an air inlet opening Ø 125.5 mm, arranged concentrically to the impeller.

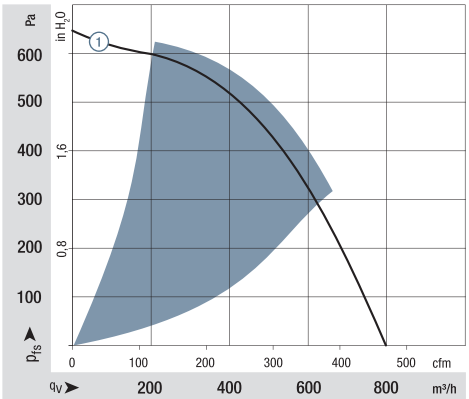


Air performance measured according to: ISO 5801.
Installation category A, with ebm-papst inlet ring without contact protection.
Noise: Total sound power level $L_{WA}$ ISO 10302 measured on a hemisphere with a distance of 2 m;
Sound pressure level $L_{pA}$ measured at 1 m distance from fan axis.
The values given are applicable only under the specified measuring conditions and may differ depending on the installation conditions.
In the event of deviation from the standard configuration, the parameters must be checked after installation!
For detailed information see
http://www.ebmpapst.com/general conditions

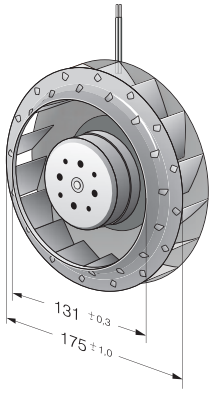


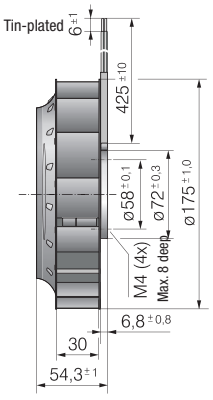

Max. 980 m³/h

S-Force

# DC centrifugal fans

## Ø 175 x 69 mm



- **Material:** Impeller: GRP[1)]
- **Direction of air flow:** Axial: Intake, Centrifugal: Exhaust
- **Direction of rotation:** Clockwise, looking towards rotor
- **Connection:** Via single wires AWG 18, 20 or AWG 22, TR 64, speed signal and control input AWG 22
- **Highlights:** Highly efficient and smoothly operating 3-phase fan drive Backward-curved impeller
- **Weight:** 775 g

1) Fiberglass-reinforced plastic

- **Possible special versions:**
  (See chapter DC fans - specials)
  - Speed signal
  - Go / NoGo alarm
  - Alarm with speed limit
  - External temperature sensor
  - Internal temperature sensor
  - PWM control input
  - Analog control input
  - Multi-option control input
  - Moisture protection
  - Salt spray protection
  - Degree of protection: IP 54

Series RER 175 TD
VBS0175XULCS
VBS0175RULDS

**Nominal data**

| Type | Air flow m³/h | Air flow cfm | **Nominal voltage** VDC | Voltage range VDC | Sound power level Bel(A) | Sintec sleeve bearings □ / Ball bearings ■ | Power consumption Watts | Nominal speed rpm⁻¹ | Temperature range °C | Service life $L_{10}$ (40 °C) ebm-papst standard Hours | Service life $L_{10}$ ($T_{max}$) ebm-papst standard Hours | Life expectancy $L_{10IPC}$ (40 °C) see page 15 Hours | Curve |
|---|---|---|---|---|---|---|---|---|---|---|---|---|---|
| RER 175-42/14/2 TDMLP | 600 | 353 | **24** | 16...30 | 7.3 | ■ | 48 | 3 400 | -20...+65 | 72 500 / 40 000 | | 122 500 | ① |
| RER 175-42/14/2 TDMP | 865 | 509 | **24** | 16...36 | 8.2 | ■ | 110 | 4 800 | -20...+65 | 70 000 / 40 000 | | 117 500 | ② |
| RER 175-42/18/2 TDMLP | 600 | 353 | **48** | 36...57 | 7.3 | ■ | 46 | 3 400 | -20...+65 | 72 500 / 40 000 | | 122 500 | ① |
| RER 175-42/18/2 TDMP | 865 | 509 | **48** | 36...72 | 8.2 | ■ | 110 | 4 800 | -20...+65 | 70 000 / 40 000 | | 117 500 | ② |
| RER 175-42/18/2 TDP | 980 | 577 | **48** | 36...72 | 8.5 | ■ | 166 | 5 400 | -20...+65 | 60 000 / 32 500 | | 102 500 | ③ |
| RadiCal RER 175-39/18/2 TDPR-113 | 948 | 556 | **48** | 36...72 | 8.4 | ■ | 178 | 5 400 | -20...+65 | 72 500 / 40 000 | | 122 500 | ④ |

Subject to change

Speed control range from 800 rpm⁻¹ at 7 % PWM up to nominal speed at > 90 % PWM.
Standstill at 0 % PWM, maximum speed if control cable is interrupted.

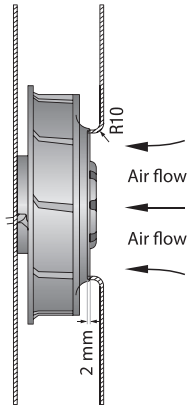


The air flow and sound level of the centrifugal fans without external housing depend on their individual installation conditions.
The stated air flow and sound level were recorded under the following measurement parameters:
Centrifugal fan mounted on a foundation plate 207 x 207 mm.
Cover plate 207 x 207 mm, with an air inlet opening Ø 125.5 mm, arranged concentrically to the impeller.

RadiCal RER 175-39/18/2 TDPR-113

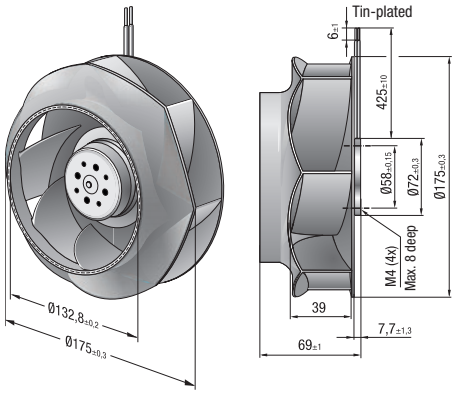


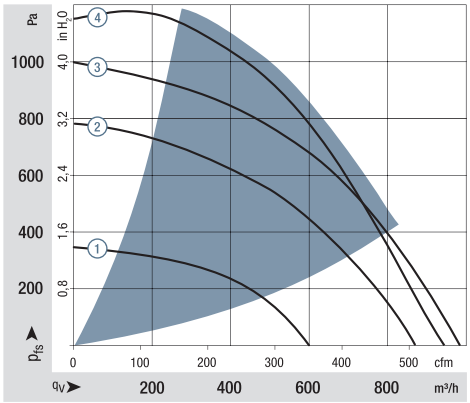


Air performance measured according to: ISO 5801.
Installation category A, with ebm-papst inlet ring without contact protection.
Noise: Total sound power level $L_{WA}$ ISO 10302 measured on a hemisphere with a distance of 2 m; Sound pressure level $L_{pA}$ measured at 1 m distance from fan axis.
The values given are applicable only under the specified measuring conditions and may differ depending on the installation conditions.
In the event of deviation from the standard configuration, the parameters must be checked after installation!
For detailed information see http://www.ebmpapst.com/general conditions

RER 175 TD

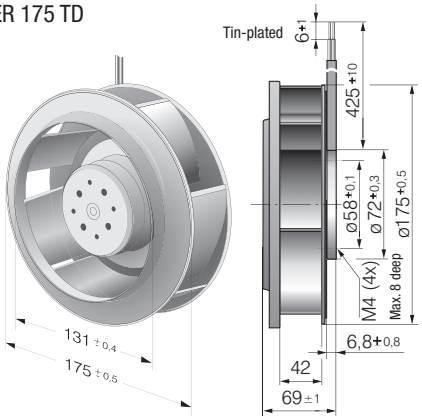




ebmpapst

Max. 970 m³/h

S-Force

# DC centrifugal fans – RadiCal

## Ø 190 x 69 mm



- **Material:** Impeller: GRP[1)]
- **Direction of air flow:** Axial: Intake, Centrifugal: Exhaust
- **Direction of rotation:** Clockwise, looking towards rotor
- **Connection:** Via single wires AWG 18, 20 or AWG 22, TR 64, speed signal and control input AWG 22
- **Highlights:** Highly efficient and smoothly operating 3-phase fan drive Backward-curved RadiCal impeller
- Weight: 870 g

1) Fiberglass-reinforced plastic

- **Possible special versions:**
  (See chapter DC fans - specials)
  - Speed signal
  - Go / NoGo alarm
  - Alarm with speed limit
  - External temperature sensor
  - Internal temperature sensor
  - PWM control input
  - Analog control input
  - Multi-option control input
  - Moisture protection
  - Salt spray protection
  - Degree of protection: IP 54

Series RER 190 TD
VBS0190RULCS
VBS0190RULDS

**Nominal data**

| Type | Air flow m³/h | Air flow cfm | **Nominal voltage** VDC | Voltage range VDC | Sound power level Bel(A) | Sintec sleeve bearings / Ball bearings □/■ | Power consumption Watts | Nominal speed rpm⁻¹ | Temperature range °C | Service life $L_{10}$ (40 °C) ebm-papst standard Hours | Service life $L_{10}$ ($T_{max}$) ebm-papst standard Hours | Life expectancy $L_{10IPC}$ (40 °C) see page 15 Hours | Curve |
|---|---|---|---|---|---|---|---|---|---|---|---|---|---|
| RER 190-39/14/2 TDMLO | 650 | 382 | **24** | 16...30 | 7.6 | ■ | 58 | 3 000 | -20...+60 | 55 000 | / 35 000 | 92 500 | ① |
| RER 190-39/14/2 TDMO | 860 | 506 | **24** | 16...36 | 7.9 | ■ | 110 | 3 900 | -20...+65 | 52 500 | / 30 000 | 87 500 | ② |
| RER 190-39/18/2 TDMLO | 650 | 382 | **48** | 36...57 | 7.6 | ■ | 56 | 3 000 | -20...+65 | 55 000 | / 30 000 | 92 500 | ① |
| RER 190-39/18/2 TDMOR-211 | 860 | 506 | **48** | 36...72 | 7.9 | ■ | 105 | 3 900 | -20...+65 | 52 500 | / 30 000 | 87 500 | ② |
| RER 190-39/18/2 TDO | 970 | 571 | **48** | 36...72 | 8.3 | ■ | 148 | 4 400 | -20...+65 | 40 000 | / 22 500 | 67 500 | ③ |

Subject to change

Speed control range from 800 rpm⁻¹ at 7 % PWM up to nominal speed at > 90 % PWM.
Standstill at 0 % PWM, Standstill if control cable is interrupted.

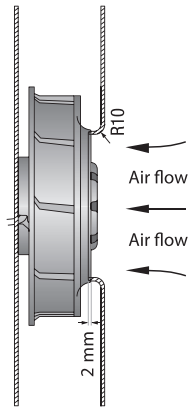


The air flow and sound level of the centrifugal fans without external housing depend on their individual installation conditions.
The stated air flow and sound level were recorded under the following measurement parameters:
Centrifugal fan mounted on a foundation plate 225 x 225 mm.
Cover plate 225 x 225 mm, with an air inlet opening Ø 125.5 mm, arranged concentrically to the impeller.

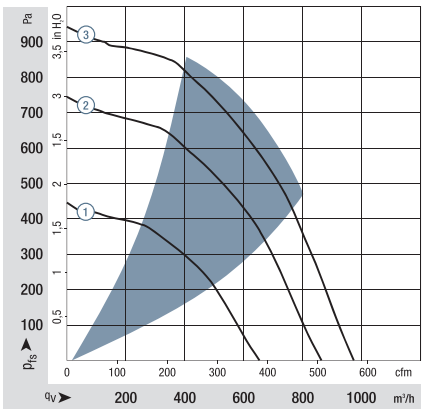


Air performance measured according to: ISO 5801.
Installation category A, with ebm-papst inlet ring without contact protection.
Noise: Total sound power level $L_{WA}$ ISO 10302 measured on a hemisphere with a distance of 2 m;
Sound pressure level $L_{pA}$ measured at 1 m distance from fan axis.
The values given are applicable only under the specified measuring conditions and may differ depending on the installation conditions.
In the event of deviation from the standard configuration, the parameters must be checked after installation!
For detailed information see
http://www.ebmpapst.com/general conditions

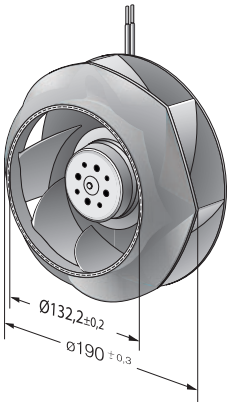


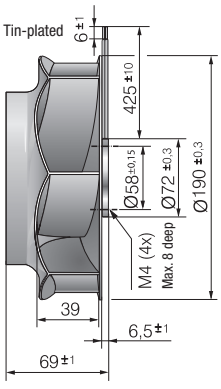

Max. 820 m³/h

# EC centrifugal fans – RadiCal

## Ø 190 mm

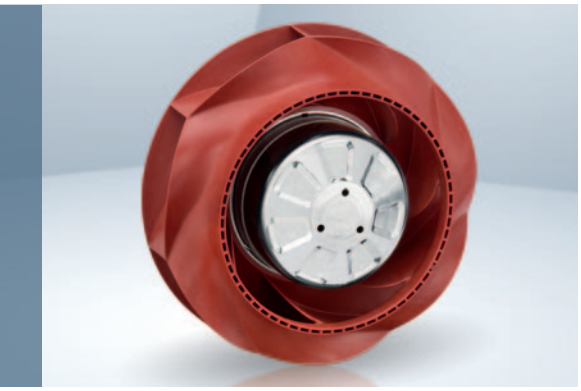

- **Material:** Impeller: PA plastic; Rotor: Galvanized
- **Number of blades:** 7
- **Direction of rotation:** Clockwise, looking towards rotor
- **Degree of protection:** Motor IP24 KM, electronics IP6K9K (mating connector installed)
- **Insulation class:** "B"
- **Installation position:** Shaft horizontal or rotor on bottom; rotor on top on request
- **Condensation drainage holes:** On rotor side
- **Mode of operation:** Continuous operation (S1)
- **Bearings:** Ball bearing; (sealed)

VBS0190RUNCS

**Nominal data**

| Type | Motor | Curve | Nominal voltage VDC | Nominal voltage range VDC | Air flow m³/h | Nominal speed rpm⁻¹ | Power consumption W | Input current A | Admissible amb. temp. °C | Technical features and connection diagram |
|---|---|---|---|---|---|---|---|---|---|---|
| **R1G 190** | M1G074-BF | Ⓐ | 12 | 8...16 | 565 | 3300 | 74 | 6.40 | -25..+70 | p. 278 / Q) |
| **R1G 190** | M1G074-BF | Ⓑ | 24 | 16...28 | 755 | 4200 | 135 | 5.60 | -25..+60 | p. 278 / Q) |
| **R1G 190** | M1G074-BF | Ⓒ | 48 | 36...57 | 820 | 4500 | 165 | 3.40 | -25..+70 | p. 279 / R) |

Subject to change

**Curves:**

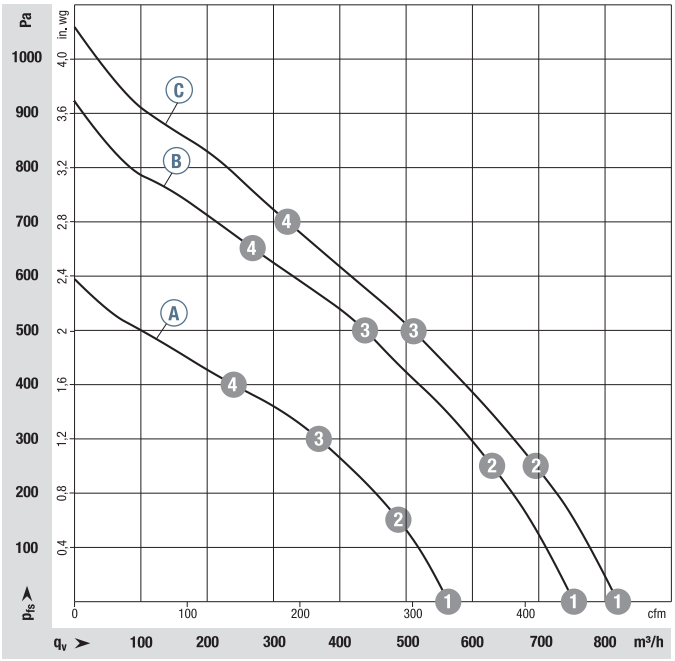


| | n rpm⁻¹ | $P_{ed}$ W | I A |
|---|---|---|---|
| Ⓐ 1 | 3300 | 74 | 6.40 |
| Ⓐ 2 | 3245 | 78 | 6.71 |
| Ⓐ 3 | 3175 | 80 | 7.05 |
| Ⓐ 4 | 3250 | 78 | 6.72 |
| Ⓑ 1 | 4200 | 135 | 5.60 |
| Ⓑ 2 | 4080 | 142 | 5.90 |
| Ⓑ 3 | 3985 | 147 | 6.12 |
| Ⓑ 4 | 4115 | 140 | 5.83 |
| Ⓒ 1 | 4500 | 165 | 3.40 |
| Ⓒ 2 | 4380 | 165 | 3.40 |
| Ⓒ 3 | 4215 | 167 | 3.50 |
| Ⓒ 4 | 4345 | 165 | 3.40 |

Air performance measured according to: ISO 5801, Installation category A, with ebm-papst inlet ring without contact protection. Suction-side noise levels: LWA according to ISO 13347, $L_pA$ measured at 1 m distance from fan axis. The values given are applicable only under the specified measuring conditions and may differ depending on the installation conditions. In the event of deviation from the standard configuration, the parameters must be checked after installation! For detailed information see http://www.ebmpapst.com/general conditions



ebmpapst

- **Technical features:** See connection diagram p. 278/279
- **Cable exit:** Axial
- **Approvals:** EAC; CSA C22.2 No. 113; UL 507





| Centrifugal fans | Weight centrifugal fans kg | Inlet ring |
|---|---|---|
| **R1G 190-RD61-02** | 1.45 | 09576-2-4013 |
| **R1G 190-RD79-02** | 1.46 | 09576-2-4013 |
| **R1G 190-RD16-02** | 1.30 | 09576-2-4013 |

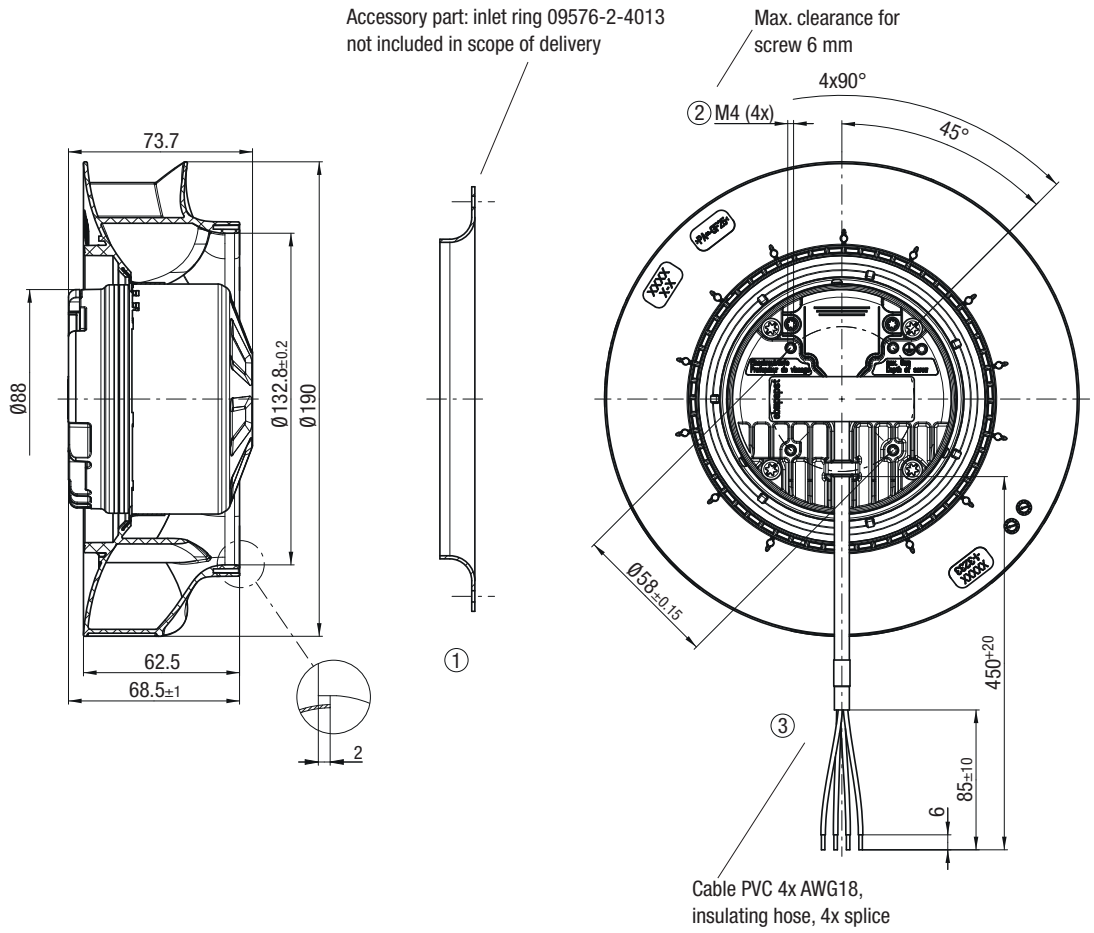

Max. 930 m³/h

# DC centrifugal fans – RadiCal

## Ø 190 mm

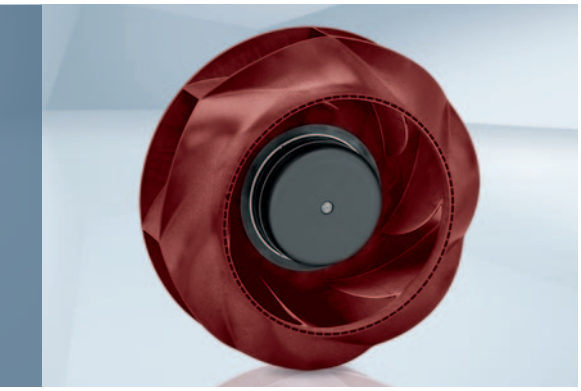

- **Material:** Impeller: PA plastic; Rotor: Painted black
- **Number of blades:** 7
- **Direction of rotation:** Clockwise, looking towards rotor
- **Degree of protection:** IP 44, depending on installation and position
- **Insulation class:** "B"
- **Installation position:** Any
- **Condensation drainage holes:** None
- **Mode of operation:** Continuous operation (S1)
- **Bearings:** Maintenance-free ball bearings

VBS0190RUNES

**Nominal data**

| Type | Motor | Curve | Nominal voltage | Nominal voltage range | Air flow | Nominal speed | Power consumption | Input current | Sound pressure level | Admissible amb. temp. | Technical features and connection diagram |
|---|---|---|---|---|---|---|---|---|---|---|---|
| | | | VDC | VDC | m³/h | rpm⁻¹ | W | A | dB(A) | °C | |
| **R3G 190** | M3G 074-CF | Ⓐ | 24 | 16-28 | 880 | 4570 | 180 | 7.50 | 76 | -25..+60 | p. 277 / J5) |
| **R3G 190** | M3G 074-CF | Ⓑ | 48 | 36-57 | 930 | 4800 | 192 | 4.00 | 76 | -25..+60 | p. 277 / J5) |

Subject to change

**Curves:**

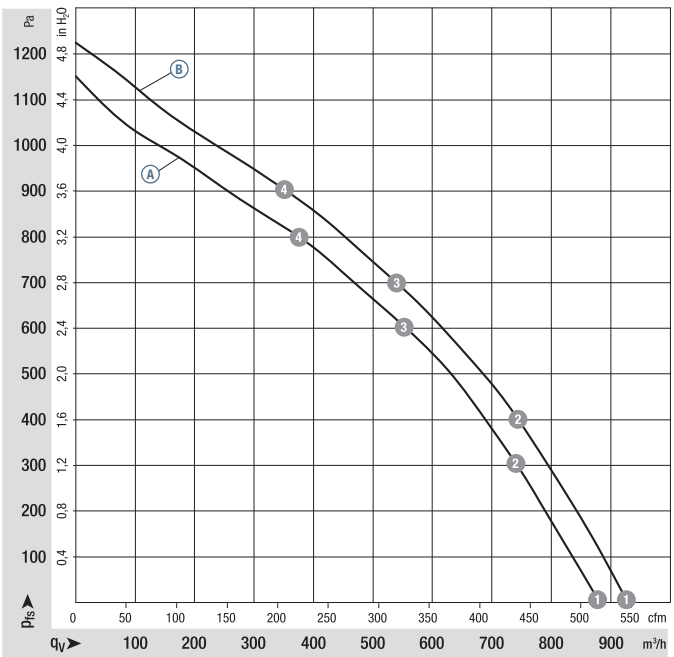


| | | n rpm⁻¹ | $P_{ed}$ W | I A | $L_WA$ dB(A) |
|---|---|---|---|---|---|
| Ⓐ | 1 | 4570 | 180 | 7.50 | 84 |
| Ⓐ | 2 | 4525 | 188 | 7.83 | 79 |
| Ⓐ | 3 | 4435 | 199 | 8.34 | 77 |
| Ⓐ | 4 | 4520 | 191 | 7.96 | 81 |
| Ⓑ | 1 | 4800 | 192 | 4.00 | 84 |
| Ⓑ | 2 | 4690 | 212 | 4.41 | 80 |
| Ⓑ | 3 | 4640 | 221 | 4.60 | 79 |
| Ⓑ | 4 | 4740 | 205 | 4.28 | 81 |

Air performance measured according to: ISO 5801, Installation category A, with ebm-papst inlet ring without contact protection. Suction-side noise levels: LWA according to ISO 13347, $L_pA$ measured at 1 m distance from fan axis. The values given are applicable only under the specified measuring conditions and may differ depending on the installation conditions. In the event of deviation from the standard configuration, the parameters must be checked after installation! For detailed information see http://www.ebmpapst.com/general conditions



ebmpapst

- **Technical features:** See connection diagram p. 277
- **Cable exit:** Variable
- **Conformity with standard(s):** EN 60950-1
- **Approvals:** EAC



Weight centrifugal fans



| Centrifugal fans | kg | Inlet ring |
|---|---|---|
| **R3G 190-RN38 -01** | 1.9 | 09576-2-4013 |
| **R3G 190-RN99 -02** | 1.9 | 09576-2-4013 |

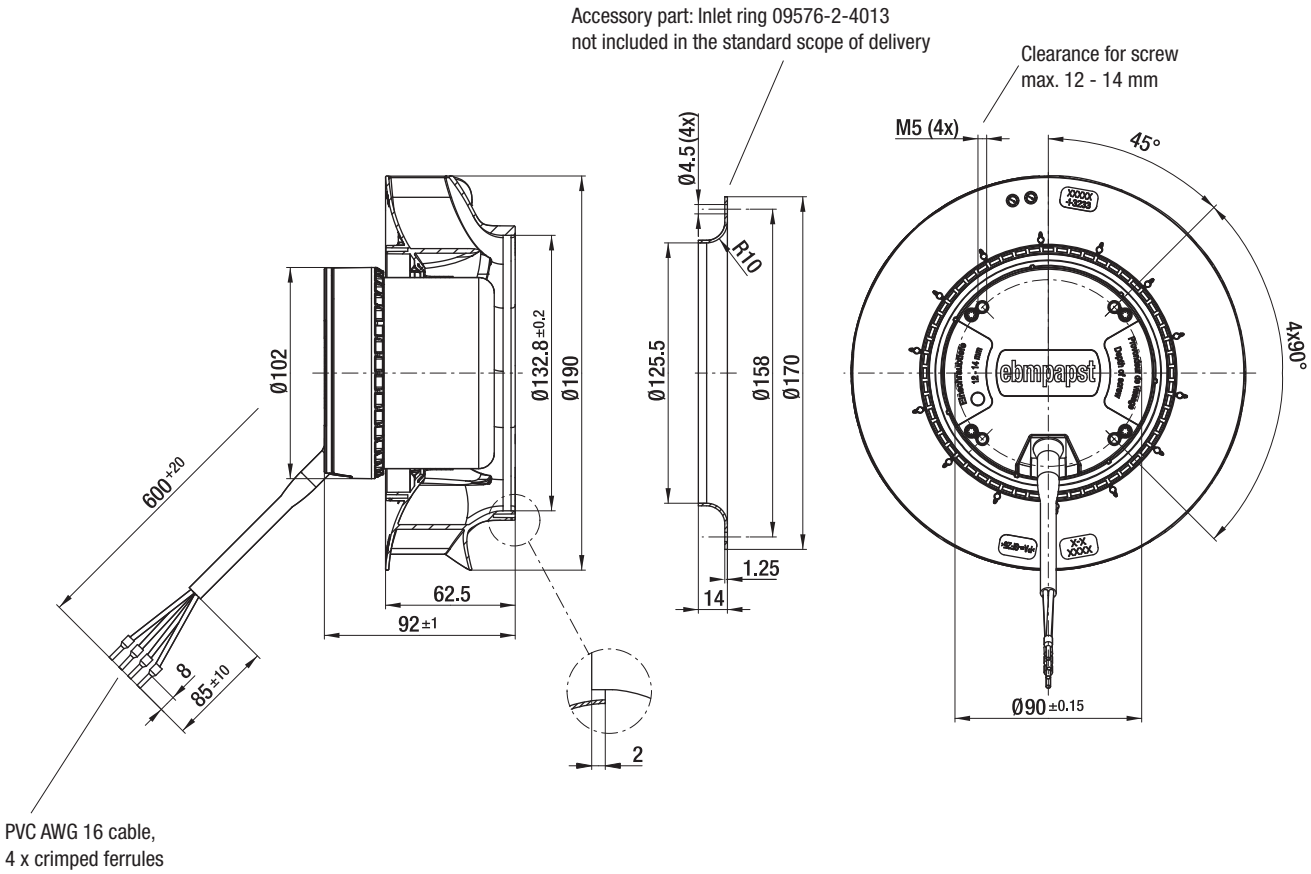

Max. 1080 m³/h

# EC centrifugal fans – RadiCal

## Ø 220 mm

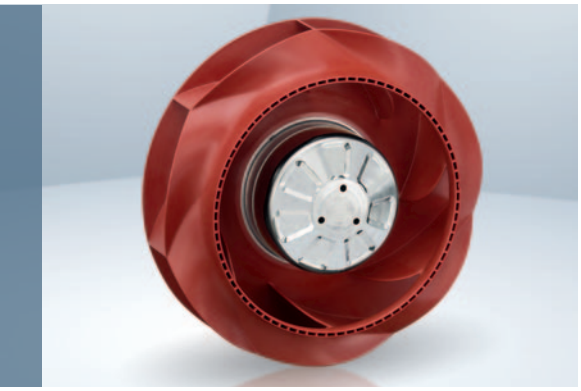

- **Material:** Impeller: PA plastic; Rotor: Galvanized
- **Number of blades:** 7
- **Direction of rotation:** Clockwise, looking towards rotor
- **Degree of protection:** Motor IP24 KM, electronics IP6K9K (mating connector installed)
- **Insulation class:** "B"
- **Installation position:** Shaft horizontal or rotor on bottom; rotor on top on request
- **Condensation drainage holes:** On rotor side
- **Mode of operation:** Continuous operation (S1)
- **Bearings:** Ball bearing; (sealed)

VDS0220RUNCS

**Nominal data**

| Type | Motor | Curve | Nominal voltage VDC | Nominal voltage range VDC | Air flow m³/h | Nominal speed rpm⁻¹ | Power consumption W | Input current A | Admissible amb. temp. °C | Technical features and connection diagram |
|---|---|---|---|---|---|---|---|---|---|---|
| **R1G 220** | M1G074-BF | Ⓐ | 12 | 8...16 | 925 | 2700 | 90 | 8.60 | -25..+70 | p. 278 / Q) |
| **R1G 220** | M1G074-BF | Ⓑ | 24 | 16...28 | 1070 | 3050 | 125 | 5.20 | -25..+60 | p. 278 / Q) |
| **R1G 220** | M1G074-BF | Ⓒ | 48 | 36...57 | 1080 | 3150 | 125 | 2.60 | -25..+70 | p. 279 / R) |

Subject to change

**Curves:**

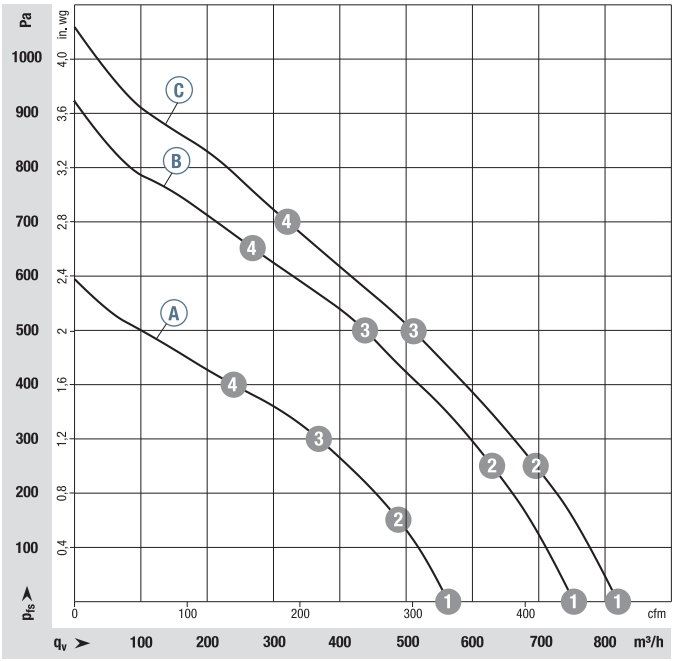


| | n rpm⁻¹ | $P_{ed}$ W | I A |
|---|---|---|---|
| Ⓐ 1 | 2700 | 90 | 8,60 |
| Ⓐ 2 | 2670 | 92 | 8,84 |
| Ⓐ 3 | 2600 | 96 | 9,25 |
| Ⓐ 4 | 2685 | 92 | 8,80 |
| Ⓑ 1 | 3050 | 125 | 5,20 |
| Ⓑ 2 | 3085 | 131 | 5,43 |
| Ⓑ 3 | 2965 | 132 | 5,50 |
| Ⓑ 4 | 3065 | 130 | 5,40 |
| Ⓒ 1 | 3150 | 125 | 2,60 |
| Ⓒ 2 | 3070 | 128 | 2,70 |
| Ⓒ 3 | 2985 | 130 | 2,70 |
| Ⓒ 4 | 3085 | 127 | 2,70 |

Air performance measured according to: ISO 5801, Installation category A, with ebm-papst inlet ring without contact protection. Suction-side noise levels: LWA according to ISO 13347, $L_pA$ measured at 1 m distance from fan axis. The values given are applicable only under the specified measuring conditions and may differ depending on the installation conditions. In the event of deviation from the standard configuration, the parameters must be checked after installation! For detailed information see http://www.ebmpapst.com/general conditions



ebmpapst

- **Technical features:** See connection diagram p. 278/279
- **Cable exit:** Axial
- **Approvals:** EAC; CSA C22.2 No. 113; UL 507





| Centrifugal fans | Weight centrifugal fans kg | Inlet ring |
|---|---|---|
| **R1G 220-RD61-02** | 1.5 | 09609-2-4013 |
| **R1G 220-RD10-02** | 1.5 | 09609-2-4013 |
| **R1G 220-RD02-02** | 1.5 | 09609-2-4013 |

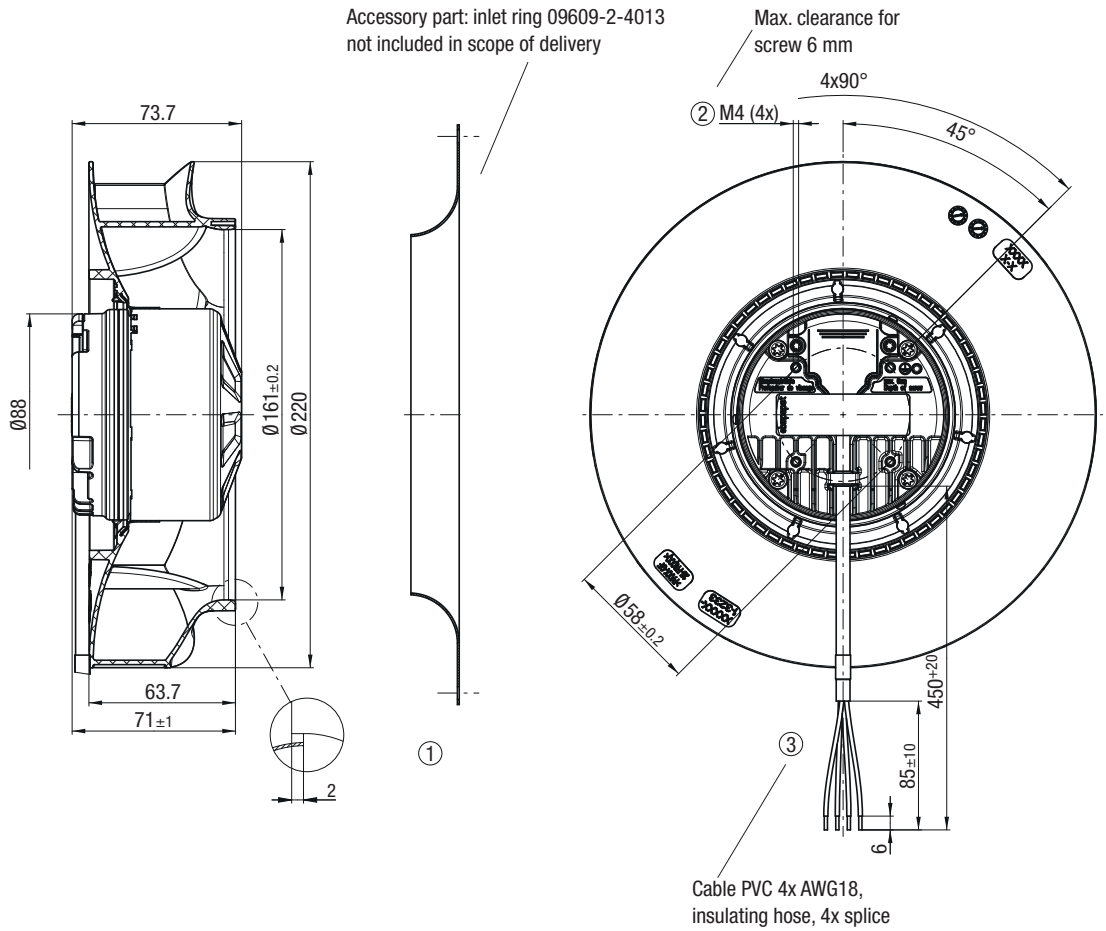

Max. 1215 m³/h

# DC centrifugal fans – RadiCal

## Ø 220 mm

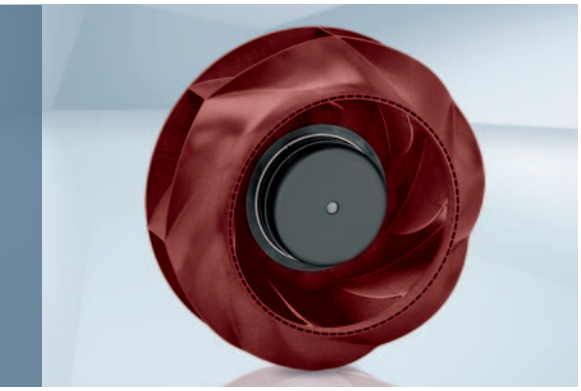

- **Material:** Impeller: PA plastic; Rotor: Painted black
- **Number of blades:** 7
- **Direction of rotation:** Clockwise, looking towards rotor
- **Degree of protection:** IP 44, depending on installation and position
- **Insulation class:** "B"
- **Installation position:** Any
- **Condensation drainage holes:** None
- **Mode of operation:** Continuous operation (S1)
- **Bearings:** Maintenance-free ball bearings

VBS0220RUNES

**Nominal data**

| Type | Motor | Curve | Nominal voltage | Nominal voltage range | Air flow | Nominal speed | Power consumption | Input current | Sound pressure level | Admissible amb. temp. | Technical features and connection diagram |
|---|---|---|---|---|---|---|---|---|---|---|---|
| | | | VDC | VDC | m³/h | rpm⁻¹ | W | A | dB(A) | °C | |
| **R3G 220** | M3G 074-CF | Ⓐ | 24 | 16-28 | 1200 | 3460 | 157 | 6.50 | 73 | -25...+60 | p. 277 / J5) |
| **R3G 220** | M3G 074-CF | Ⓑ | 48 | 36-57 | 1215 | 3510 | 160 | 3.40 | 73 | -25...+60 | p. 277 / J5) |

Subject to change

**Curves:**

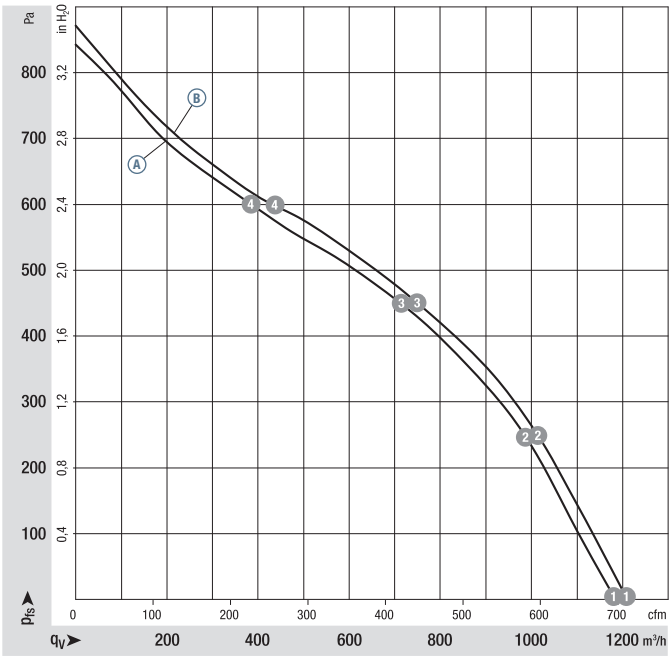


| | | n rpm⁻¹ | $P_{ed}$ W | I A | $L_WA$ dB(A) |
|---|---|---|---|---|---|
| Ⓐ | 1 | 3460 | 157 | 6.50 | 81 |
| Ⓐ | 2 | 3420 | 171 | 7.11 | 77 |
| Ⓐ | 3 | 3360 | 182 | 7.59 | 74 |
| Ⓐ | 4 | 3455 | 168 | 6.97 | 79 |
| Ⓑ | 1 | 3510 | 160 | 3.40 | 81 |
| Ⓑ | 2 | 3450 | 168 | 3.50 | 77 |
| Ⓑ | 3 | 3385 | 178 | 3.71 | 74 |
| Ⓑ | 4 | 3460 | 167 | 3.47 | 79 |

Air performance measured according to: ISO 5801, Installation category A, with ebm-papst inlet ring without contact protection. Suction-side noise levels: LWA according to ISO 13347, $L_pA$ measured at 1 m distance from fan axis. The values given are applicable only under the specified measuring conditions and may differ depending on the installation conditions. In the event of deviation from the standard configuration, the parameters must be checked after installation! For detailed information see http://www.ebmpapst.com/general conditions



ebmpapst

- **Technical features:** See connection diagram p. 277
- **Cable exit:** Variable
- **Conformity with standard(s):** EN 60950-1
- **Approvals:** EAC



Weight centrifugal fans



| Centrifugal fans | kg | Inlet ring |
|---|---|---|
| **R3G 220-RN12 -01** | 1.9 | 09609-2-4013 |
| **R3G 220-RNB6 -02** | 1.9 | 09609-2-4013 |

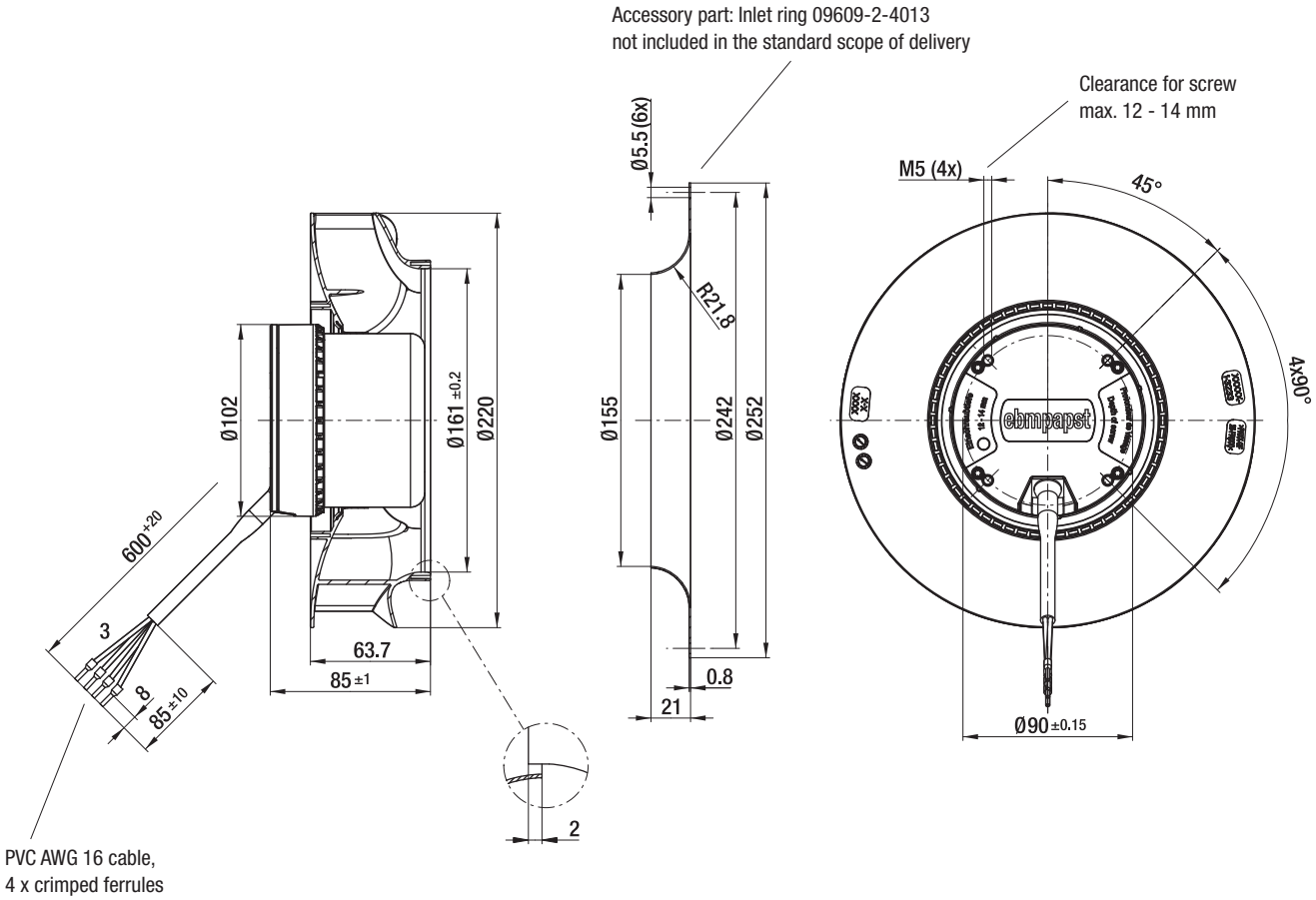

Max. 1250 m³/h

S-Force

# DC centrifugal fans – RadiCal

## Ø 220 x 71 mm

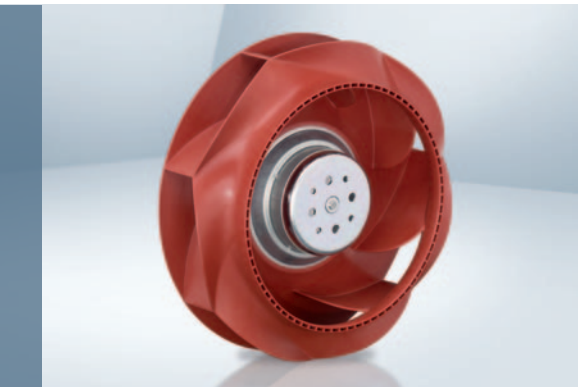

- **Material:** Impeller: GRP[1)]
- **Direction of air flow:** Axial: Intake, Centrifugal: Exhaust
- **Direction of rotation:** Clockwise, looking towards rotor
- **Connection:** Via single wires AWG 18, 20 or AWG 22, TR 64, speed signal and control input AWG 22
- **Highlights:** Highly efficient and smoothly operating 3-phase fan drive Backward-curved impeller
- **Weight:** 940 g

1) Fiberglass-reinforced plastic

- **Possible special versions:**
  (See chapter DC fans - specials)
  - Speed signal
  - Go / NoGo alarm
  - Alarm with speed limit
  - External temperature sensor
  - Internal temperature sensor
  - PWM control input
  - Analog control input
  - Multi-option control input
  - Humidity protection
  - Salt spray protection
  - Degree of protection: IP 54

Series RER 220 TD
VBS0200RULCS
VBS0200RULDS

**Nominal data**

| Type | Air flow m³/h | Air flow cfm | **Nominal voltage** VDC | Voltage range VDC | Sound power level Bel(A) | Sintec sleeve bearings / Ball bearings □/■ | Power consumption Watts | Nominal speed rpm⁻¹ | Temperature range °C | Service life $L_{10}$ (40 °C) ebm-papst standard Hours | Service life $L_{10}$ ($T_{max}$) ebm-papst standard Hours | Life expectancy $L_{10IPC}$ (40 °C) see page 15 Hours | Curve |
|---|---|---|---|---|---|---|---|---|---|---|---|---|---|
| RER 220-43/14/2 TDM0* | 1063 | 625 | **24** | 16...36 | 7.5 | ■ | 110 | 3 000 | -20...+55 | 65 000 / 45 000 | | 110 000 | ① |
| RER 220-43/18/2 TDM0 | 1063 | 625 | **48** | 36...72 | 7.5 | ■ | 110 | 3 000 | -20...+55 | 65 000 / 45 000 | | 110 000 | ① |
| RER 220-43/18/2 TD0 | 1250 | 735 | **48** | 36...72 | 7.8 | ■ | 160 | 3 500 | -20...+55 | 60 000 / 42 500 | | 102 500 | ② |

Subject to change

* On request

Speed control range from 800 rpm⁻¹ at 7 % PWM up to nominal speed at > 90 % PWM.
Standstill at 0 % PWM, Standstill if control cable is interrupted.

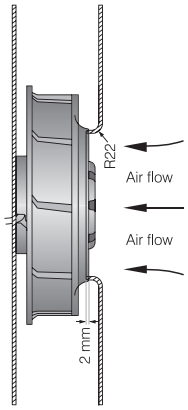


The air flow and sound level of the centrifugal fans without external housing depend on their individual installation conditions.
The stated air flow and sound level were recorded under the following measurement parameters:
Centrifugal fan mounted on a foundation plate 260 x 260 mm.
Cover plate 260 x 260 mm, with an air inlet opening Ø 155 mm, arranged concentrically to the impeller.

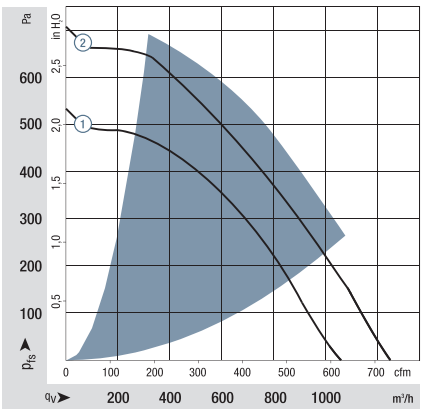


Air performance measured according to: ISO 5801.
Installation category A, with ebm-papst inlet ring without contact protection.
Noise: Total sound power level LWA ISO 10302 measured on a hemisphere with a distance of 2 m.
Sound pressure level LpA measured at 1 m distance from fan axis.
The values given are applicable only under the specified measuring conditions and may differ depending on the installation conditions.
In the event of deviation from the standard configuration, the parameters must be checked after installation!
For detailed information see
http://www.ebmpapst.com/general conditions

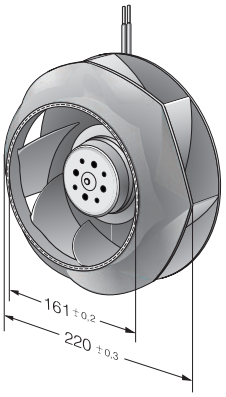


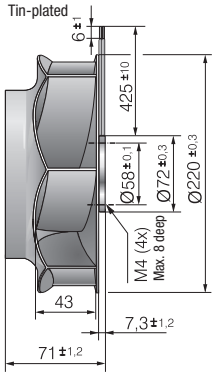




ebmpapst

Max. 1600 m³/h

S-Force

# DC centrifugal fans

## Ø 225 x 99 mm



- **Material:** Impeller: GRP[1)]
- **Direction of air flow:** Axial: Intake, Centrifugal: Exhaust
- **Direction of rotation:** Clockwise, looking towards rotor
- **Connection:** Via single wires AWG 18, 20 or AWG 22, TR 64, speed signal and control input AWG 22
- **Highlights:** Highly efficient and smoothly operating 3-phase fan drive Backward-curved impeller
- **Weight:** 1030 g

1) Fiberglass-reinforced plastic

- **Possible special versions:**
  (See chapter DC fans - specials)
  - Speed signal
  - Go / NoGo alarm
  - Alarm with speed limit
  - External temperature sensor
  - Internal temperature sensor
  - PWM control input
  - Analog control input
  - Multi-option control input
  - Humidity protection
  - Salt spray protection
  - Degree of protection: IP 54

Series RER 225 TD
VBS0225XULDS
VBS0225RULFS

**Nominal data**

| Type | Air flow m³/h | Air flow cfm | Nominal voltage VDC | Voltage range VDC | Sound power level Bel(A) | Sintec sleeve bearings / Ball bearings □/■ | Power consumption Watts | Nominal speed rpm⁻¹ | Temperature range °C | Service life $L_{10}$ (40 °C) ebm-papst standard / Service life $L_{10}$ ($T_{max}$) ebm-papst standard Hours | Life expectancy $L_{10IPC}$ (40 °C) see page 15 Hours | Curve |
|---|---|---|---|---|---|---|---|---|---|---|---|---|
| RER 225-63/18/2 TDMLO | 1190 | 700 | **48** | 36...72 | 7.2 | ■ | 77 | 2 500 | -20...+55 | 70 000 / 50 000 | 122 500 | ① |
| RER 225-63/18/2 TDMO | 1340 | 789 | **48** | 36...72 | 7.8 | ■ | 108 | 2 800 | -20...+55 | 55 000 / 40 000 | 92 500 | ② |
| RER 225-63/18/2 TDO | 1600 | 941 | **48** | 36...72 | 8.1 | ■ | 163 | 3 300 | -20...+55 | 52 500 / 37 500 | 87 500 | ③ |
| RadiCal RER 225-55/18/2 TDO | 1540 | 906 | **48** | 36...72 | 8.0 | ■ | 225,6 | 3 500 | -20...+55 | 50 000 / 35 000 | 85 000 | ④ |

Subject to change

Speed control range from 800 rpm⁻¹ at 7 % PWM up to nominal speed at > 90 % PWM.
Standstill at 0 % PWM, Type O: Standstill if control cable is interrupted. Type P: Maximum speed if control cable is interrupted.

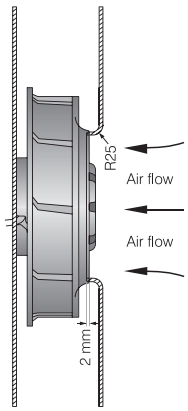


The air flow and sound level of the centrifugal fans without external housing depend on their individual installation conditions.
The stated air flow and sound level were recorded under the following measurement parameters:
Centrifugal fan mounted on a foundation plate 266 x 266 mm.
Cover plate 266 x 266 mm, with an air inlet opening Ø 146 mm, arranged concentrically to the impeller.

RER 225 TD RadiCal

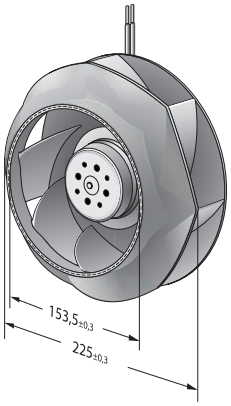


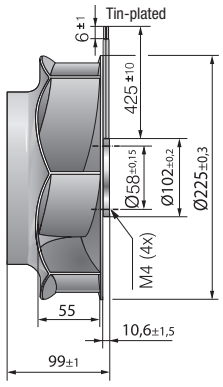


RER 225 TD

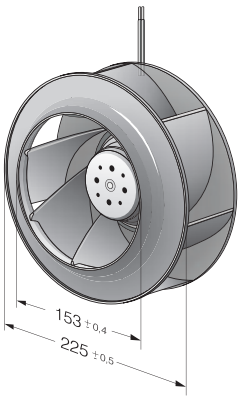


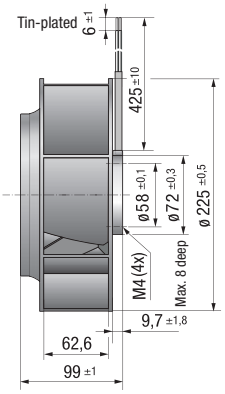


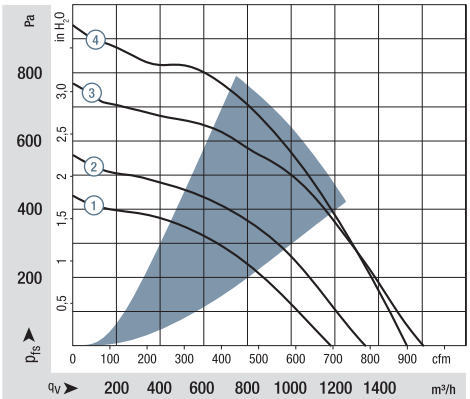


Air performance measured according to: ISO 5801.
Installation category A, with ebm-papst inlet ring without contact protection.
Noise: Total sound power level LWA ISO 10302 measured on a hemisphere with a distance of 2 m.
Sound pressure level LpA measured at 1 m distance from fan axis.
The values given are applicable only under the specified measuring conditions and may differ depending on the installation conditions.
In the event of deviation from the standard configuration, the parameters must be checked after installation!
For detailed information see http://www.ebmpapst.com/general conditions

Max. 1130 m³/h

# EC centrifugal fans – RadiCal

## Ø 225 mm

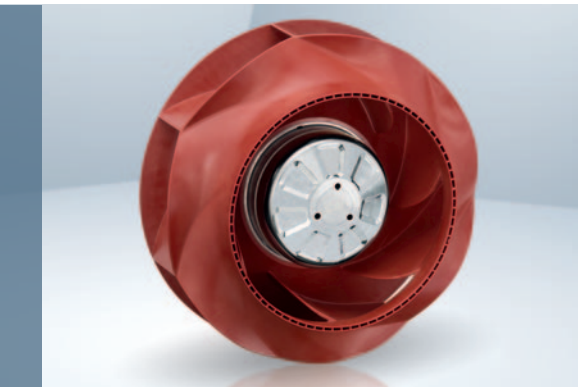

- **Material:** Impeller: PA plastic; Rotor: Galvanized
- **Number of blades:** 7
- **Direction of rotation:** Clockwise, looking towards rotor
- **Degree of protection:** Motor IP24 KM, electronics IP6K9K (mating connector installed)
- **Insulation class:** "B"
- **Installation position:** Shaft horizontal or rotor on bottom; rotor on top on request
- **Condensation drainage holes:** On rotor side
- **Mode of operation:** Continuous operation (S1)
- **Bearings:** Ball bearing; (sealed)

VBS0225RUNCS

**Nominal data**

| Type | Motor | Curve | Nominal voltage | Nominal voltage range | Air flow | Nominal speed | Power consumption | Input current | Admissible amb. temp. | Technical features and connection diagram |
|---|---|---|---|---|---|---|---|---|---|---|
| | | | VDC | VDC | m³/h | rpm⁻¹ | W | A | °C | |
| **R1G 225** | M1G074-BF | Ⓐ | 12 | 8...16 | 990 | 2350 | 85 | 8.00 | -25..+70 | p. 278 / Q) |
| **R1G 225** | M1G074-BF | Ⓑ | 24 | 16...28 | 1125 | 2700 | 120 | 4.90 | -25..+70 | p. 278 / Q) |
| **R1G 225** | M1G074-BF | Ⓒ | 48 | 36...57 | 1130 | 2700 | 115 | 2.40 | -25..+70 | p. 279 / R) |

Subject to change

**Curves:**

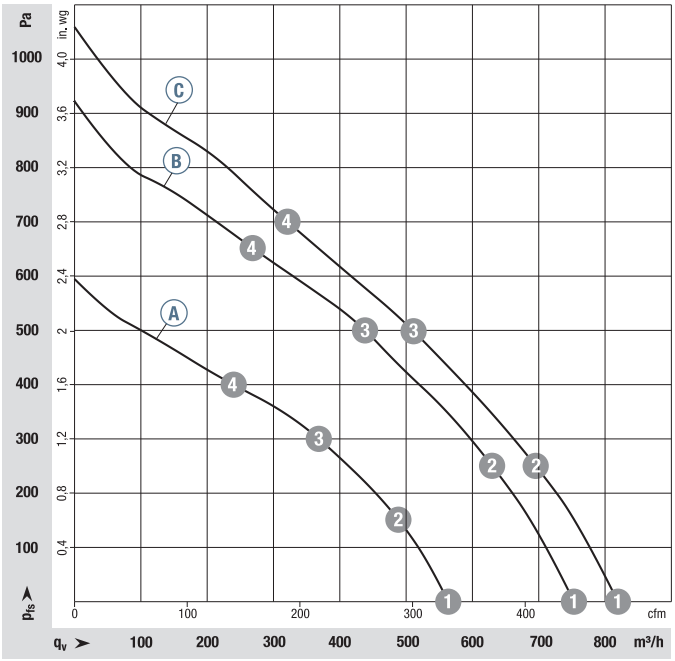


| | | n rpm⁻¹ | $P_{ed}$ W | I A |
|---|---|---|---|---|
| Ⓐ | 1 | 2350 | 85 | 8.00 |
| Ⓐ | 2 | 2245 | 89 | 8.54 |
| Ⓐ | 3 | 2245 | 89 | 8.56 |
| Ⓐ | 4 | 2380 | 82 | 7.80 |
| Ⓑ | 1 | 2700 | 120 | 4.90 |
| Ⓑ | 2 | 2535 | 121 | 5.06 |
| Ⓑ | 3 | 2525 | 121 | 5.06 |
| Ⓑ | 4 | 2710 | 117 | 4.87 |
| Ⓒ | 1 | 2700 | 115 | 2.40 |
| Ⓒ | 2 | 2610 | 118 | 2.50 |
| Ⓒ | 3 | 2545 | 119 | 2.50 |
| Ⓒ | 4 | 2720 | 116 | 2.40 |

Air performance measured according to: ISO 5801, Installation category A, with ebm-papst inlet ring without contact protection. Suction-side noise levels: LWA according to ISO 13347, $L_pA$ measured at 1 m distance from fan axis. The values given are applicable only under the specified measuring conditions and may differ depending on the installation conditions. In the event of deviation from the standard configuration, the parameters must be checked after installation! For detailed information see http://www.ebmpapst.com/general conditions



ebmpapst

- **Technical features:** See connection diagram p. 278/279
- **Cable exit:** Axial
- **Approvals:** EAC; CSA C22.2 No. 113; UL 507





| Centrifugal fans | Weight centrifugal fans kg | Inlet ring |
|---|---|---|
| **R1G 225-RD59-02** | 1.6 | 96358-2-4013 |
| **R1G 225-RD14-02** | 1.6 | 96358-2-4013 |
| **R1G 225-RD18-02** | 1.6 | 96358-2-4013 |

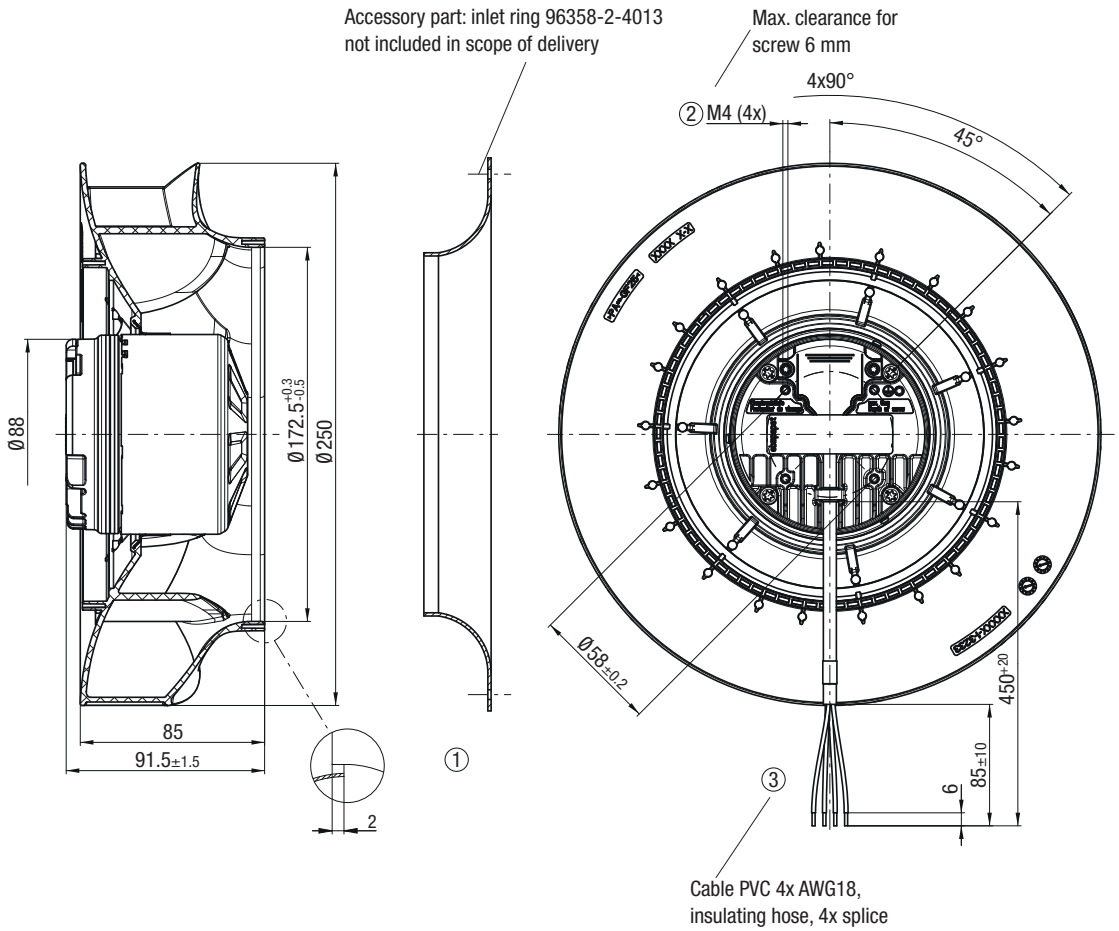

Max. 1340 m³/h

# DC centrifugal fans – RadiCal

## Ø 225 mm

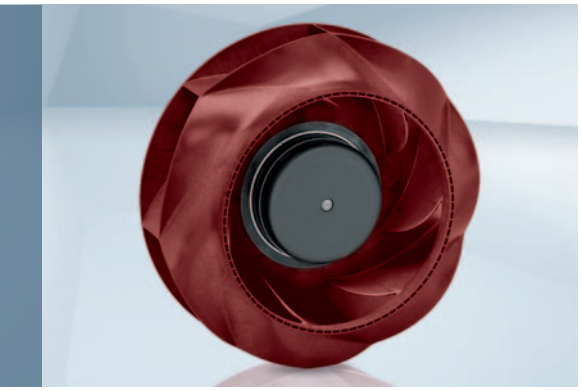

- **Material:** Impeller: PA plastic; Rotor: Painted black
- **Number of blades:** 7
- **Direction of rotation:** Clockwise, looking towards rotor
- **Degree of protection:** IP 44, depending on installation and position
- **Insulation class:** "B"
- **Installation position:** Any
- **Condensation drainage holes:** None
- **Mode of operation:** Continuous operation (S1)
- **Bearings:** Maintenance-free ball bearings

VBS0225RUNES

**Nominal data**

| Type | Motor | Curve | Nominal voltage | Nominal voltage range | Air flow | Nominal speed | Power consumption | Input current | Sound pressure level | Admissible amb. temp. | Technical features and connection diagram |
|---|---|---|---|---|---|---|---|---|---|---|---|
| | | | VDC | VDC | m³/h | rpm⁻¹ | W | A | dB(A) | °C | |
| **R3G 225** | M3G 074-CF | Ⓐ | 24 | 16-28 | 1300 | 3270 | 205 | 8.50 | 75 | -25...+60 | p. 277 / J5) |
| **R3G 225** | M3G 074-CF | Ⓑ | 48 | 36-57 | 1340 | 3400 | 230 | 4.80 | 73 | -25...+60 | p. 277 / J5) |

Subject to change

**Curves:**

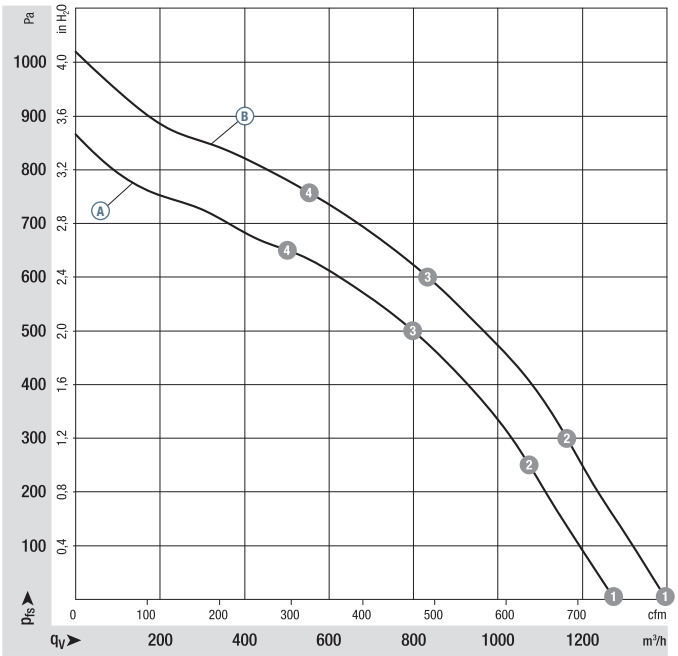


| | | n rpm⁻¹ | $P_{ed}$ W | I A | $L_WA$ dB(A) |
|---|---|---|---|---|---|
| Ⓐ | 1 | 3270 | 205 | 8.50 | 81 |
| Ⓐ | 2 | 3200 | 208 | 8.66 | 78 |
| Ⓐ | 3 | 3185 | 213 | 8.88 | 74 |
| Ⓐ | 4 | 3260 | 194 | 8.02 | 77 |
| Ⓑ | 1 | 3400 | 230 | 4.80 | 83 |
| Ⓑ | 2 | 3440 | 257 | 5.35 | 80 |
| Ⓑ | 3 | 3435 | 260 | 5.43 | 76 |
| Ⓑ | 4 | 3500 | 239 | 4.97 | 78 |

Air performance measured according to: ISO 5801, Installation category A, with ebm-papst inlet ring without contact protection. Suction-side noise levels: $L_WA$ according to ISO 13347, $L_pA$ measured at 1 m distance from fan axis. The values given are applicable only under the specified measuring conditions and may differ depending on the installation conditions. In the event of deviation from the standard configuration, the parameters must be checked after installation! For detailed information see http://www.ebmpapst.com/general conditions



ebmpapst

- **Technical features:** See connection diagram p. 277
- **Cable exit:** Variable
- **Conformity with standard(s):** EN 60950-1
- **Approvals:** EAC

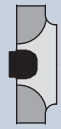



| Centrifugal fans | Weight centrifugal fans kg | Inlet ring |
|---|---|---|
| **R3G 225-RN28 -01** | 2.1 | 96358-2-4013 |
| **R3G 225-RN18 -02** | 2.1 | 96358-2-4013 |

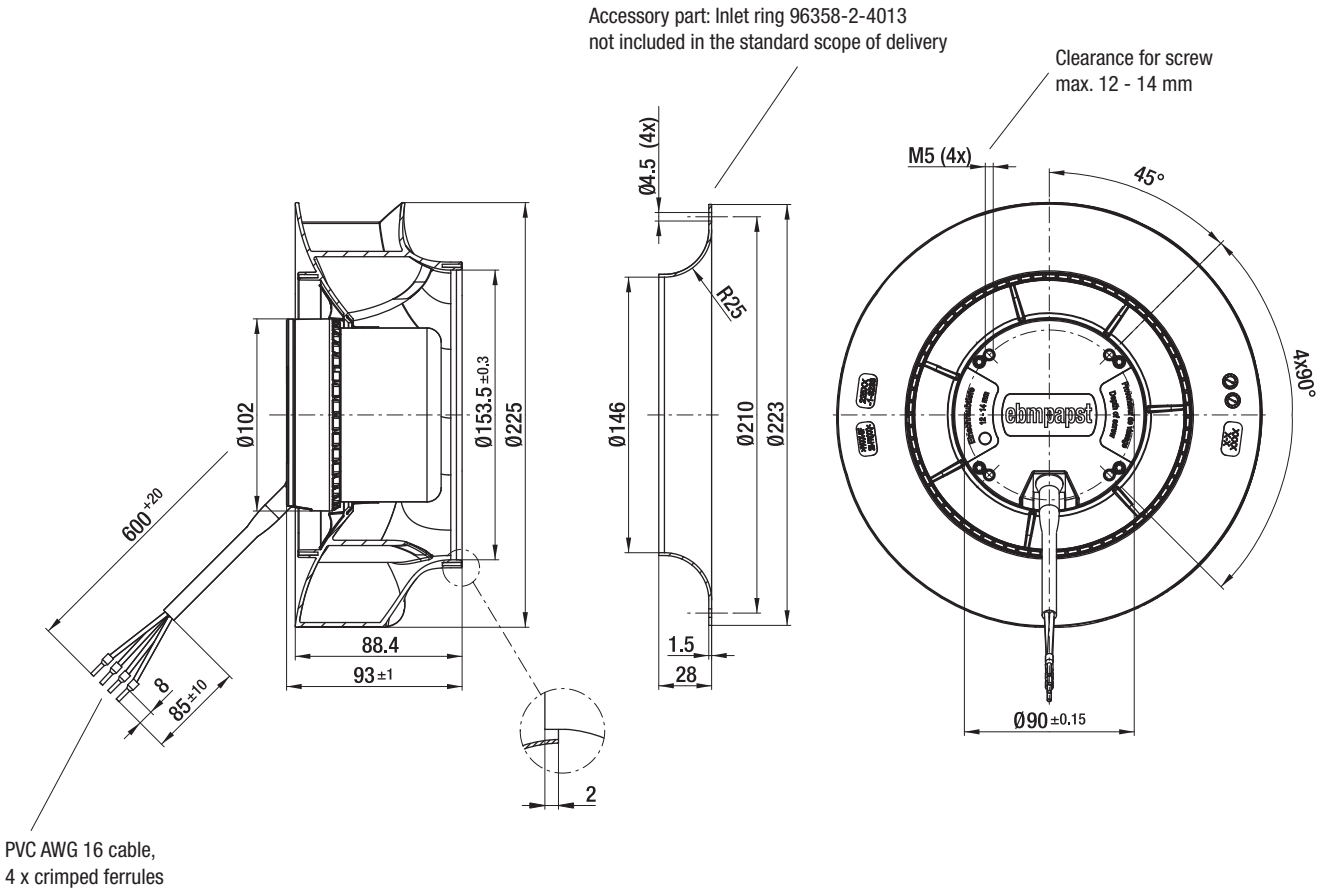

max. 1505 m³/h

# EC centrifugal fans – RadiCal

## Ø 250 mm

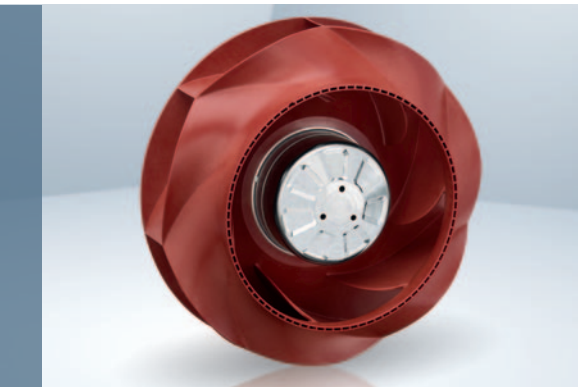

- **Material:** Impeller: PA plastic; Rotor: Galvanized
- **Number of blades:** 7
- **Direction of rotation:** Clockwise, looking towards rotor
- **Degree of protection:** Motor IP24 KM, electronics IP6K9K (mating connector installed)
- **Insulation class:** "B"
- **Installation position:** Shaft horizontal or rotor on bottom; rotor on top on request
- **Condensation drainage holes:** On rotor side
- **Mode of operation:** Continuous operation (S1)
- **Bearings:** Ball bearing; (sealed)

VBS0250RUNES

**Nominal data**

| Type | Motor | Curve | Nominal voltage | Nominal voltage range | Air flow | Nominal speed | Power consumption | Input current | Admissible amb. temp. | Technical features and connection diagram |
|---|---|---|---|---|---|---|---|---|---|---|
| | | | VDC | VDC | m³/h | min⁻¹ | W | A | °C | |
| **R1G 250** | M1G074-CF | Ⓐ | 12 | 8...16 | 1035 | 2000 | 64 | 5.40 | -25..+70 | p. 278 / Q) |
| **R1G 250** | M1G074-CF | Ⓑ | 24 | 16...28 | 1295 | 2500 | 120 | 4.90 | -25..+60 | p. 278 / Q) |
| **R1G 250** | M1G074-CF | Ⓒ | 48 | 36...57 | 1505 | 2850 | 175 | 3.70 | -25..+60 | p. 279 / R) |

Subject to change

**Curves:**

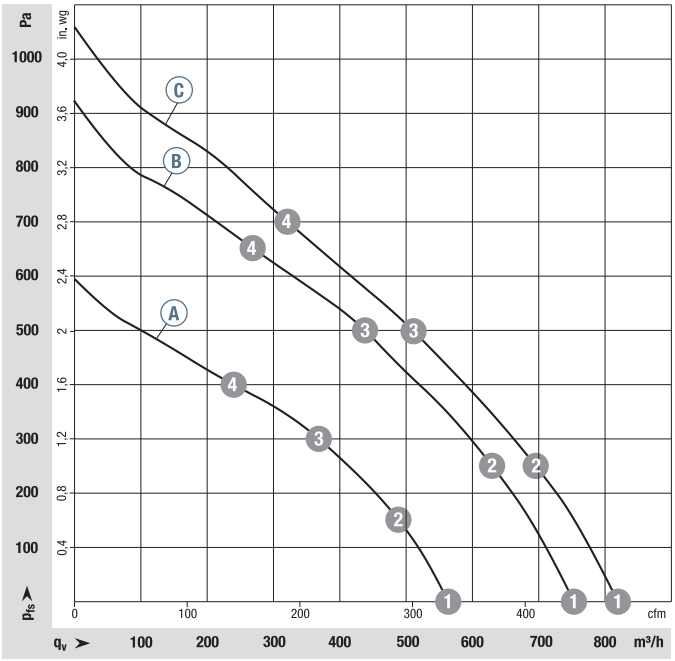


| | | n rpm⁻¹ | $P_{ed}$ W | I A |
|---|---|---|---|---|
| Ⓐ | 1 | 2000 | 64 | 5.40 |
| Ⓐ | 2 | 1945 | 69 | 5.69 |
| Ⓐ | 3 | 1895 | 71 | 5.95 |
| Ⓐ | 4 | 1945 | 69 | 5.69 |
| Ⓑ | 1 | 2500 | 120 | 4.90 |
| Ⓑ | 2 | 2420 | 123 | 5.14 |
| Ⓑ | 3 | 2350 | 130 | 5.39 |
| Ⓑ | 4 | 2420 | 124 | 5.16 |
| Ⓒ | 1 | 2850 | 175 | 3.70 |
| Ⓒ | 2 | 2755 | 179 | 3.70 |
| Ⓒ | 3 | 2650 | 182 | 3.80 |
| Ⓒ | 4 | 2795 | 177 | 3.70 |

Air performance measured according to: ISO 5801, Installation category A, with ebm-papst inlet ring without contact protection. Suction-side noise levels: LWA according to ISO 13347, $L_pA$ measured at 1 m distance from fan axis. The values given are applicable only under the specified measuring conditions and may differ depending on the installation conditions. In the event of deviation from the standard configuration, the parameters must be checked after installation! For detailed information see http://www.ebmpapst.com/general conditions



ebmpapst

- **Technical features:** See connection diagram p. 278/279
- **Cable exit:** Axial
- **Approvals:** EAC; CSA C22.2 No. 113; UL 507





| Centrifugal fans | Weight centrifugal fans kg | Inlet ring |
|---|---|---|
| **R1G 250-RC77-02** | 2.0 | 96359-2-4013 |
| **R1G 250-RC87-02** | 2.0 | 96359-2-4013 |
| **R1G 250-RC89-02** | 2.0 | 96359-2-4013 |

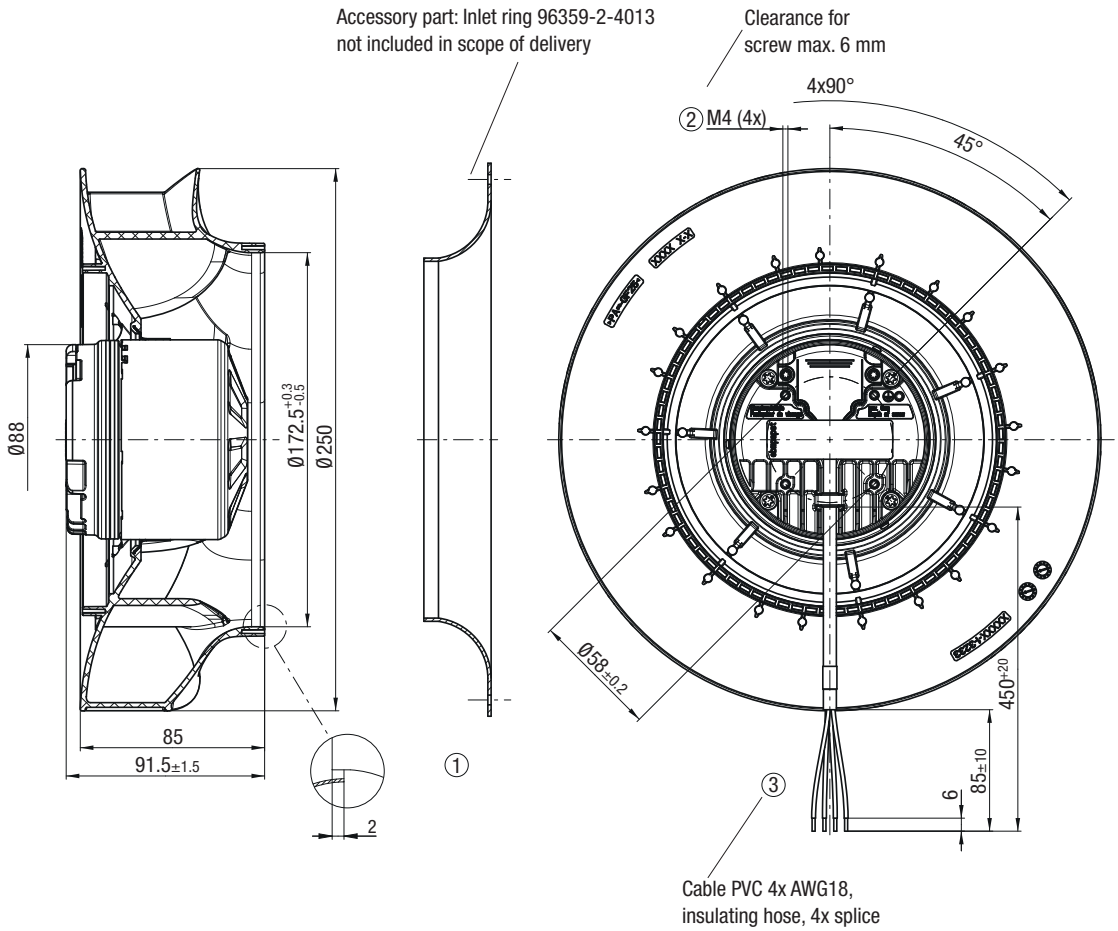

Max. 1640 m³/h

# DC centrifugal fans – RadiCal

## Ø 250 mm

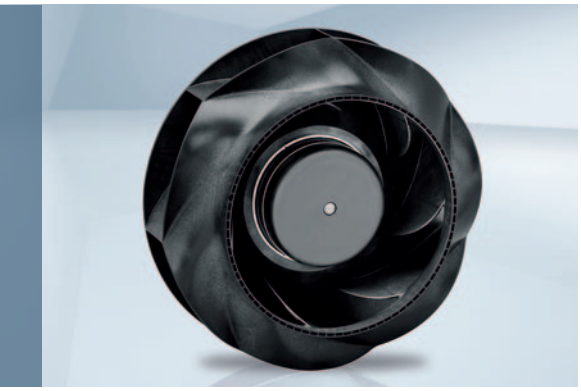

- **Material:** Impeller: PA plastic; Rotor: Painted black
- **Number of blades:** 7
- **Direction of rotation:** Clockwise, looking towards rotor
- **Degree of protection:** IP 44, depending on installation and position
- **Insulation class:** "B"
- **Installation position:** Any
- **Condensation drainage holes:** None
- **Mode of operation:** Continuous operation (S1)
- **Bearings:** Maintenance-free ball bearings

VBS0250RUNES

**Nominal data**

| Type | Motor | Curve | Nominal voltage VDC | Nominal voltage range VDC | Air flow m³/h | Nominal speed rpm⁻¹ | Power consumption W | Input current A | Sound pressure level dB(A) | Admissible amb. temp. °C | Technical features and connection diagram |
|---|---|---|---|---|---|---|---|---|---|---|---|
| **R3G 250** | M3G 074-CF | Ⓐ | 24 | 16-28 | 1505 | 2850 | 175 | 7.20 | 73 | -25...+60 | p. 277 / J5) |
| **R3G 250** | M3G 074-CF | Ⓑ | 48 | 36-57 | 1640 | 3100 | 230 | 4.80 | 73 | -25...+60 | p. 277 / J5) |

Subject to change

**Curves:**

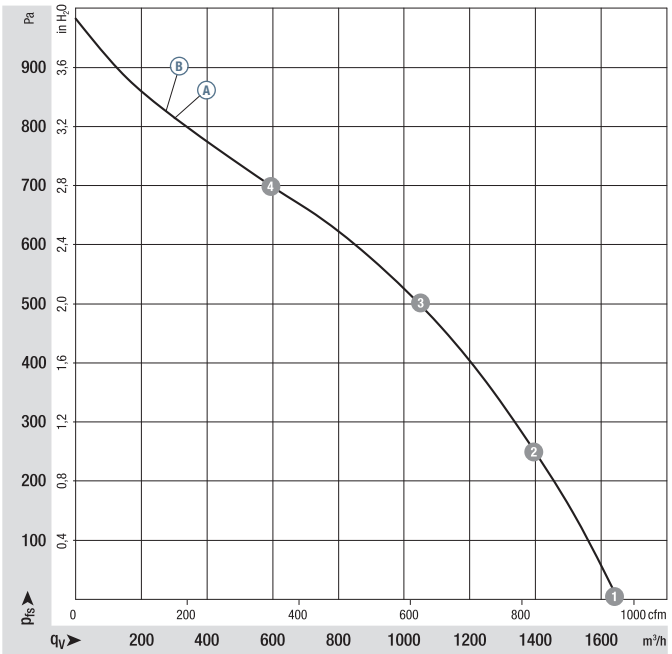


| | | n rpm⁻¹ | $P_{ed}$ W | I A | $L_WA$ dB(A) |
|---|---|---|---|---|---|
| Ⓐ | 1 | 2850 | 175 | 7.20 | 81 |
| Ⓐ | 2 | 3075 | 260 | 10.80 | 77 |
| Ⓐ | 3 | 3035 | 276 | 11.45 | 75 |
| Ⓐ | 4 | 3095 | 256 | 10.66 | 75 |
| Ⓑ | 1 | 3100 | 230 | 4.80 | 81 |
| Ⓑ | 2 | 3065 | 249 | 5.20 | 77 |
| Ⓑ | 3 | 3025 | 266 | 5.55 | 75 |
| Ⓑ | 4 | 3090 | 244 | 5.09 | 78 |

Air performance measured according to: ISO 5801, Installation category A, with ebm-papst inlet ring without contact protection. Suction-side noise levels: $L_WA$ according to ISO 13347, $L_pA$ measured at 1 m distance from fan axis. The values given are applicable only under the specified measuring conditions and may differ depending on the installation conditions. In the event of deviation from the standard configuration, the parameters must be checked after installation! For detailed information see http://www.ebmpapst.com/general conditions

- **Technical features:** See connection diagram p. 277
- **Cable exit:** Variable
- **Conformity with standard(s):** EN 60950-1
- **Approvals:** EAC





| Centrifugal fans | Weight centrifugal fans kg | Inlet ring |
|---|---|---|
| **R3G 250-RN46 -01** | 2.1 | 96359-2-4013 |
| **R3G 250-RNB5 -02** | 2.1 | 96359-2-4013 |

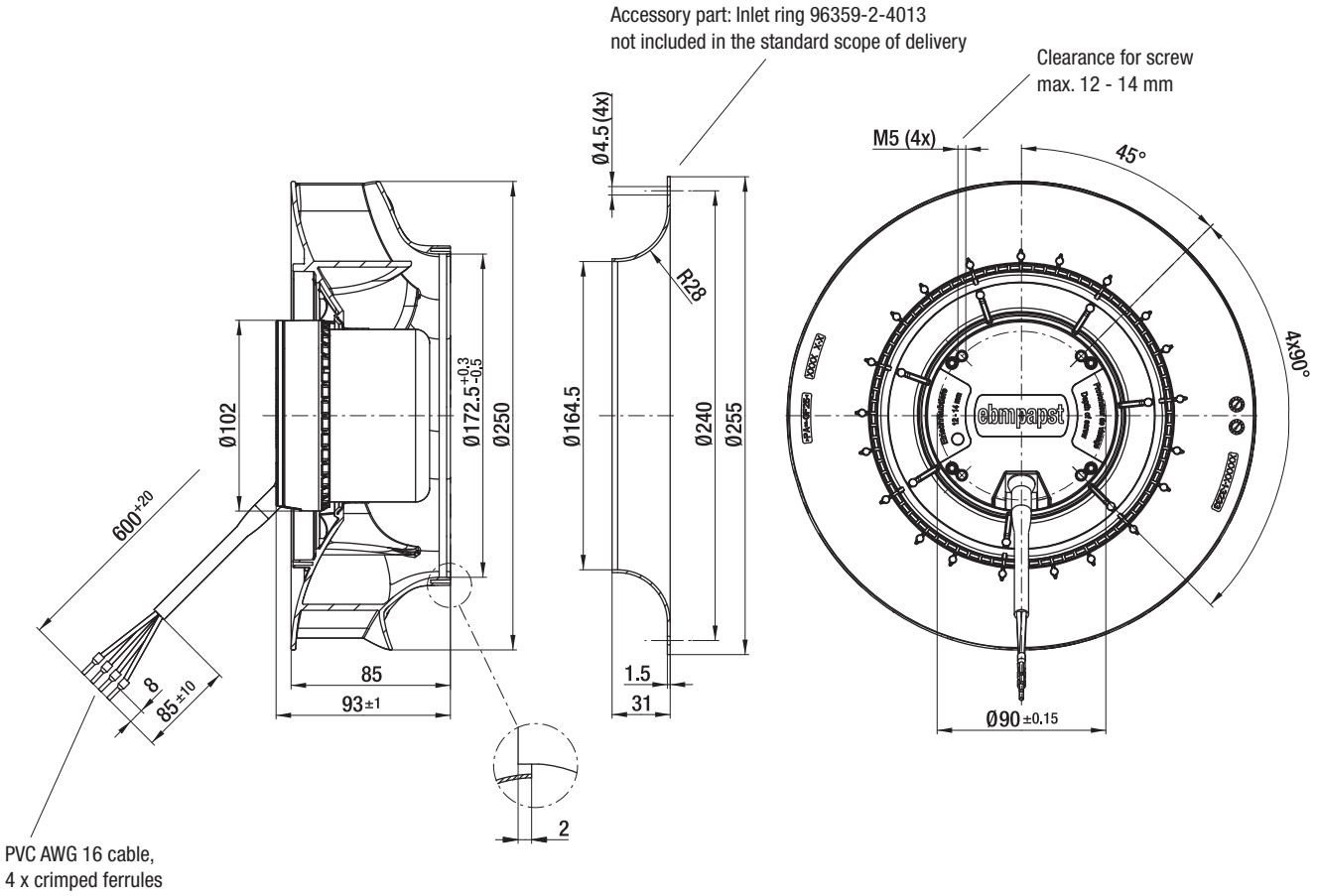

max. 2120 m³/h

# EC centrifugal fans – RadiCal

## Ø 280 mm

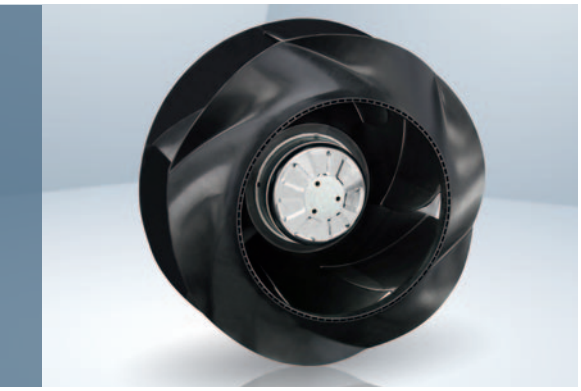

- **Material:** Impeller: PP plastic; Rotor: Galvanized
- **Number of blades:** 7
- **Direction of rotation:** Clockwise, looking towards rotor
- **Degree of protection:** Motor IP24 KM, electronics IP6K9K (mating connector installed)
- **Insulation class:** "B"
- **Installation position:** Shaft horizontal or rotor on bottom; rotor on top on request
- **Condensation drainage holes:** On rotor side
- **Mode of operation:** Continuous operation (S1)
- **Bearings:** Ball bearing; (sealed)

VBS0280RUNES

**Nominal data**

| Type | Motor | Curve | Nominal voltage VDC | Nominal voltage range VDC | Air flow m³/h | Nominal speed min⁻¹ | Power consumption W | Input current A | Admissible amb. temp. °C | Technical features and connection diagram |
|---|---|---|---|---|---|---|---|---|---|---|
| **R1G 280** | M1G074-CF | Ⓐ | 12 | 8...16 | 1780 | 1500 | 75 | 7.20 | -25..+70 | p. 278 / Q) |
| **R1G 280** | M1G074-CF | Ⓑ | 24 | 16...28 | 2035 | 1700 | 105 | 4.40 | -25..+60 | p. 278 / Q) |
| **R1G 280** | M1G074-CF | Ⓒ | 48 | 36...57 | 2120 | 1800 | 115 | 2.40 | -25..+60 | p. 279 / R) |

Subject to change

**Curves:**

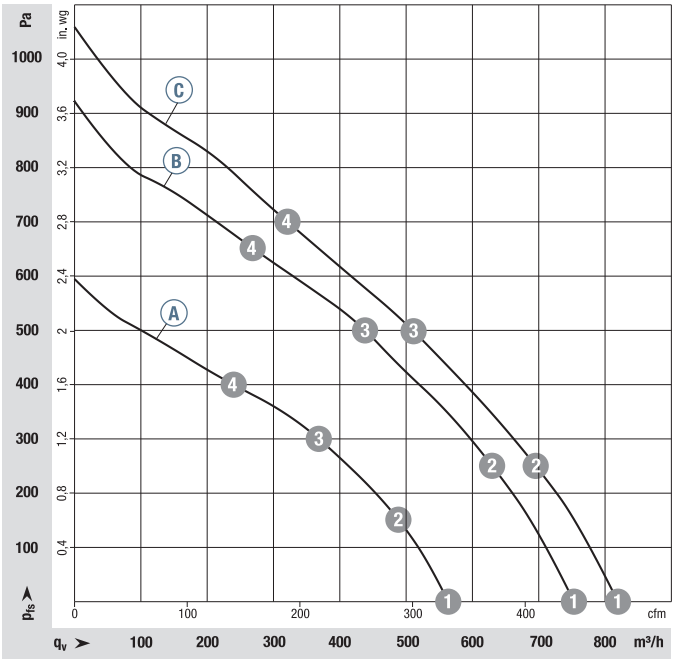


| | n rpm⁻¹ | $P_{ed}$ W | I A |
|---|---|---|---|
| Ⓐ 1 | 1500 | 75 | 7.20 |
| Ⓐ 2 | 1430 | 82 | 7.92 |
| Ⓐ 3 | 1395 | 83 | 8.15 |
| Ⓐ 4 | 1445 | 81 | 7.83 |
| Ⓑ 1 | 1700 | 105 | 4.40 |
| Ⓑ 2 | 1595 | 111 | 4.60 |
| Ⓑ 3 | 1550 | 112 | 4.68 |
| Ⓑ 4 | 1635 | 109 | 4.52 |
| Ⓒ 1 | 1800 | 115 | 2.40 |
| Ⓒ 2 | 1655 | 121 | 2.50 |
| Ⓒ 3 | 1610 | 123 | 2.60 |
| Ⓒ 4 | 1690 | 119 | 2.50 |

Air performance measured according to: ISO 5801, Installation category A, with ebm-papst inlet ring without contact protection. Suction-side noise levels: LWA according to ISO 13347, $L_pA$ measured at 1 m distance from fan axis. The values given are applicable only under the specified measuring conditions and may differ depending on the installation conditions. In the event of deviation from the standard configuration, the parameters must be checked after installation! For detailed information see http://www.ebmpapst.com/general conditions



ebmpapst

- **Technical features:** See connection diagram p. 278/279
- **Cable exit:** Variable
- **Approvals:** EAC; CSA C22.2 No. 113; UL 507





| Centrifugal fans | Weight centrifugal fans kg | Inlet ring |
|---|---|---|
| **R1G 280-RC75-02** | 2.3 | 98000-2-4013 |
| **R1G 280-RC71-02** | 2.3 | 98000-2-4013 |
| **R1G 280-RC93-02** | 2.3 | 98000-2-4013 |

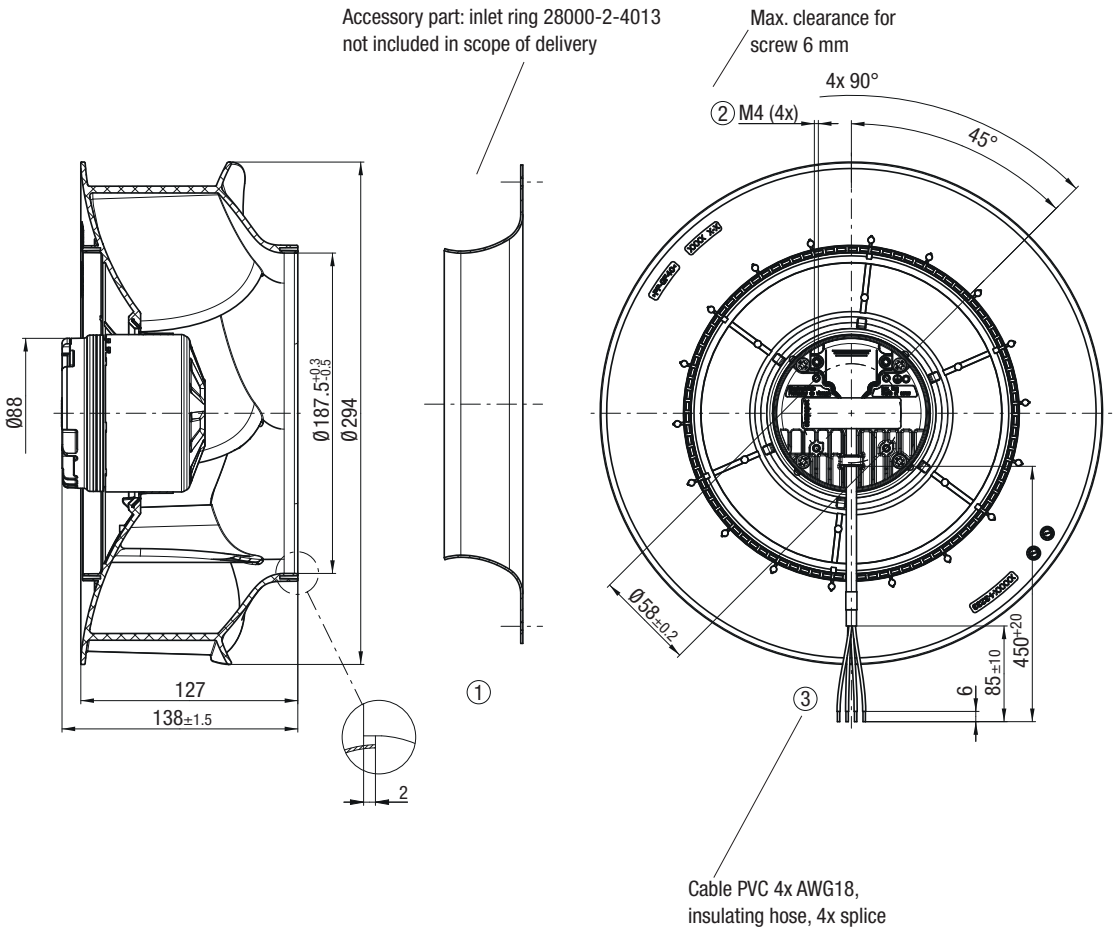

Max. 2190 m³/h

# DC centrifugal fans – RadiCal

## Ø 280 mm

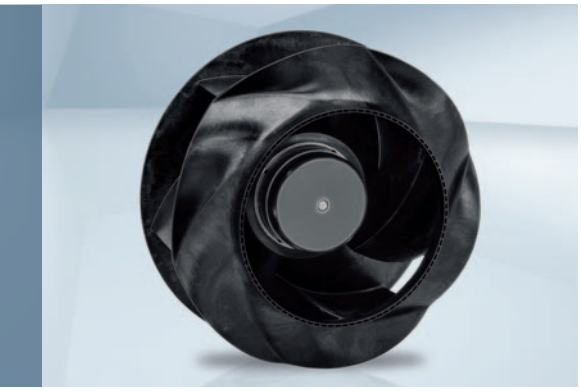

- **Material:** Impeller: PP plastic; Rotor: Painted black
- **Number of blades:** 6
- **Direction of rotation:** Clockwise, looking towards rotor
- **Degree of protection:** IP 44, depending on installation and position
- **Insulation class:** "B"
- **Installation position:** Any
- **Condensation drainage holes:** None
- **Mode of operation:** Continuous operation (S1)
- **Bearings:** Maintenance-free ball bearings

VBS0280RUNES

**Nominal data**

| Type | Motor | Curve | Nominal voltage | Nominal voltage range | Air flow | Nominal speed | Power consumption | Input current | Sound pressure level | Admissible amb. temp. | Technical features and connection diagram |
|---|---|---|---|---|---|---|---|---|---|---|---|
| | | | VDC | VDC | m³/h | rpm⁻¹ | W | A | dB(A) | °C | |
| **R3G 280** | M3G 074-CF | Ⓐ | 24 | 16-28 | 2190 | 1900 | 142 | 5.90 | 67 | -25...+60 | p. 277 / J5) |
| **R3G 280** | M3G 074-CF | Ⓑ | 48 | 36-57 | 2160 | 1910 | 140 | 2.90 | 67 | -25...+60 | p. 277 / J5) |

Subject to change

**Curves:**

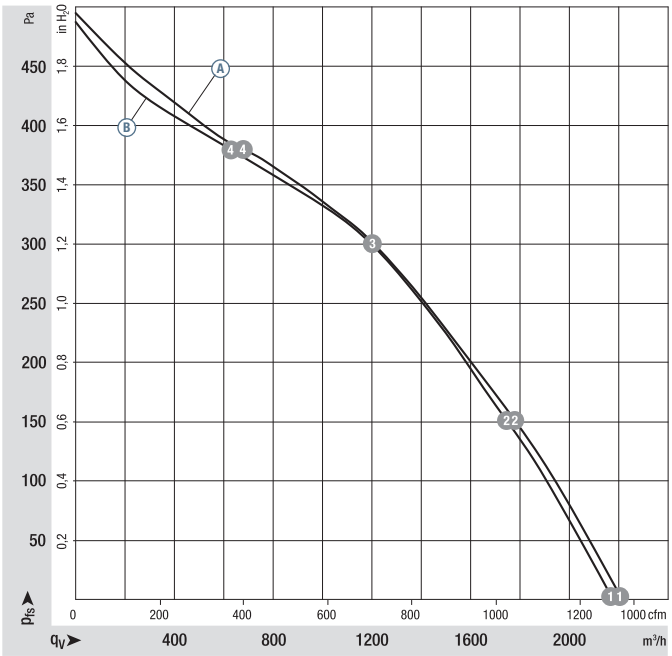


| | | n rpm⁻¹ | $P_{ed}$ W | I A | $L_WA$ dB(A) |
|---|---|---|---|---|---|
| Ⓐ | 1 | 1900 | 142 | 5.90 | 74 |
| Ⓐ | 2 | 1870 | 162 | 6.76 | 67 |
| Ⓐ | 3 | 1840 | 173 | 7.21 | 64 |
| Ⓐ | 4 | 1905 | 153 | 6.36 | 68 |
| Ⓑ | 1 | 1910 | 140 | 2.90 | 74 |
| Ⓑ | 2 | 1845 | 158 | 3.30 | 67 |
| Ⓑ | 3 | 1830 | 163 | 3.40 | 64 |
| Ⓑ | 4 | 1900 | 141 | 2.93 | 68 |

Air performance measured according to: ISO 5801, Installation category A, with ebm-papst inlet ring without contact protection. Suction-side noise levels: $L_WA$ according to ISO 13347, $L_pA$ measured at 1 m distance from fan axis. The values given are applicable only under the specified measuring conditions and may differ depending on the installation conditions. In the event of deviation from the standard configuration, the parameters must be checked after installation! For detailed information see http://www.ebmpapst.com/general conditions



ebmpapst

- **Technical features:** See connection diagram p. 277
- **Cable exit:** Variable
- **Conformity with standard(s):** EN 60950-1
- **Approvals:** EAC





| Centrifugal fans | Weight centrifugal fans kg | Inlet ring |
|---|---|---|
| **R3G 280-RN30 -01** | 2.4 | 28000-2-4013 |
| **R3G 280-RNB1 -02** | 2.4 | 28000-2-4013 |

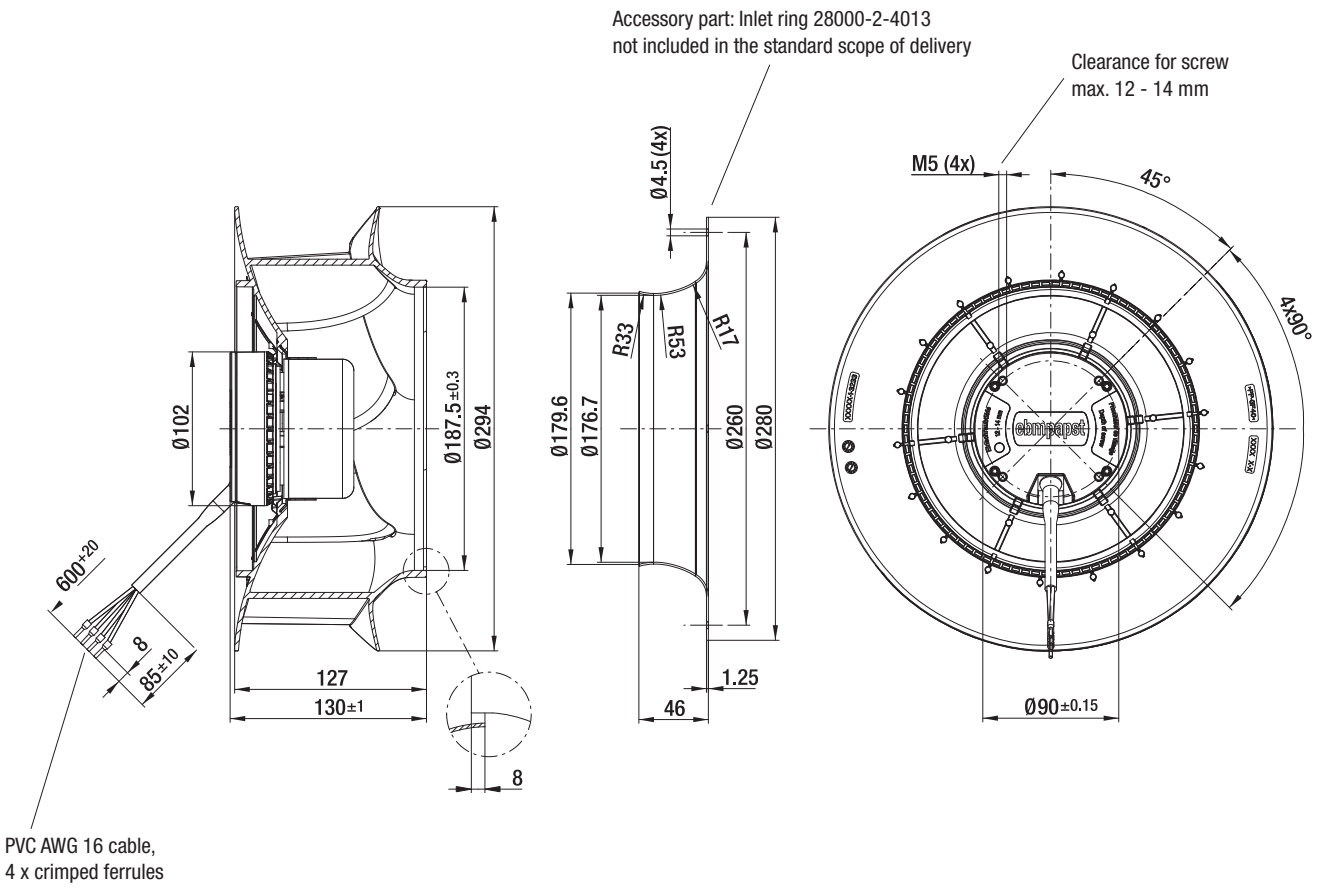

Max. 2380 m³/h

# DC centrifugal fans – RadiCal

## Ø 310 mm

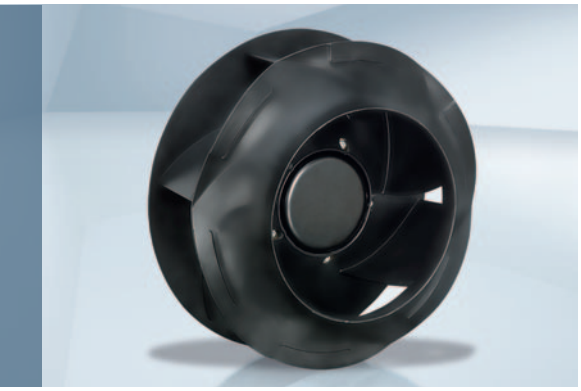

- **Material:** Impeller: PP plastic; Rotor: Painted black
- **Number of blades:** 6
- **Direction of rotation:** Clockwise, looking towards rotor
- **Degree of protection:** IP 44, depending on installation and position
- **Insulation class:** "B"
- **Installation position:** Any
- **Condensation drainage holes:** None
- **Mode of operation:** Continuous operation (S1)
- **Bearings:** Maintenance-free ball bearings

VBS0310RUNES

**Nominal data**

| Type | Motor | Curve | Nominal voltage VDC | Nominal voltage range VDC | Air flow m³/h | Nominal speed rpm⁻¹ | Power consumption W | Input current A | Sound pressure level dB(A) | Admissible amb. temp. °C | Technical features and connection diagram |
|---|---|---|---|---|---|---|---|---|---|---|---|
| **R3G 310** | M3G 074-CF | Ⓐ | 24 | 16-28 | 2310 | 1580 | 108 | 4.50 | 64 | -25...+60 | p. 277 / J5) |
| **R3G 310** | M3G 074-CF | Ⓑ | 48 | 36-57 | 2380 | 1620 | 123 | 2.60 | 64 | -25...+60 | p. 277 / J5) |

Subject to change

**Curves:**

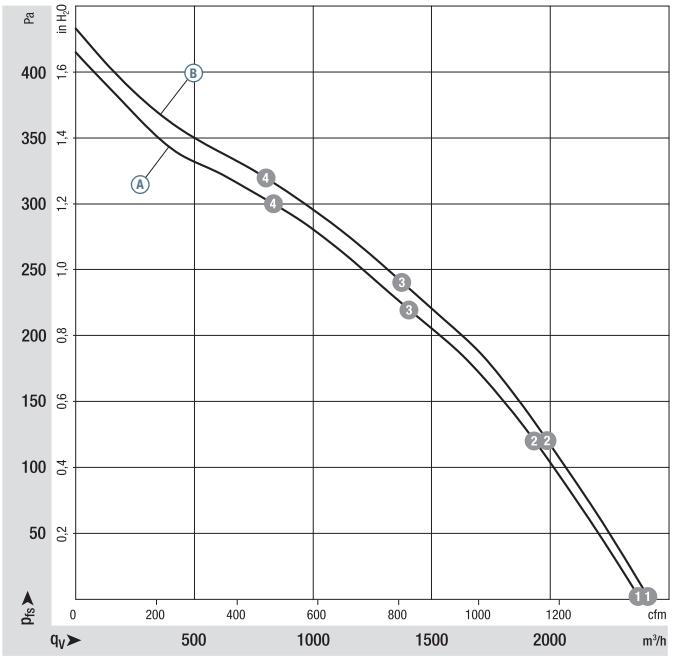


| | | n rpm⁻¹ | $P_{ed}$ W | I A | $L_WA$ dB(A) |
|---|---|---|---|---|---|
| Ⓐ | 1 | 1580 | 108 | 4.50 | 70 |
| Ⓐ | 2 | 1540 | 145 | 6.03 | 67 |
| Ⓐ | 3 | 1520 | 152 | 6.34 | 63 |
| Ⓐ | 4 | 1550 | 143 | 5.95 | 65 |
| Ⓑ | 1 | 1620 | 123 | 2.60 | 70 |
| Ⓑ | 2 | 1570 | 147 | 3.07 | 66 |
| Ⓑ | 3 | 1545 | 156 | 3.26 | 63 |
| Ⓑ | 4 | 1580 | 144 | 3.01 | 66 |

Air performance measured according to: ISO 5801, Installation category A, with ebm-papst inlet ring without contact protection. Suction-side noise levels: $L_WA$ according to ISO 13347, $L_pA$ measured at 1 m distance from fan axis. The values given are applicable only under the specified measuring conditions and may differ depending on the installation conditions. In the event of deviation from the standard configuration, the parameters must be checked after installation! For detailed information see http://www.ebmpapst.com/general conditions



ebmpapst

- **Technical features:** See connection diagram p. 277
- **Cable exit:** Variable
- **Conformity with standard(s):** EN 60950-1
- **Approvals:** EAC





| Centrifugal fans | Weight centrifugal fans kg | Inlet ring |
|---|---|---|
| **R3G 310-RN99 -01** | 2.8 | 31000-2-4013 |
| **R3G 310-RN98 -02** | 2.8 | 31000-2-4013 |

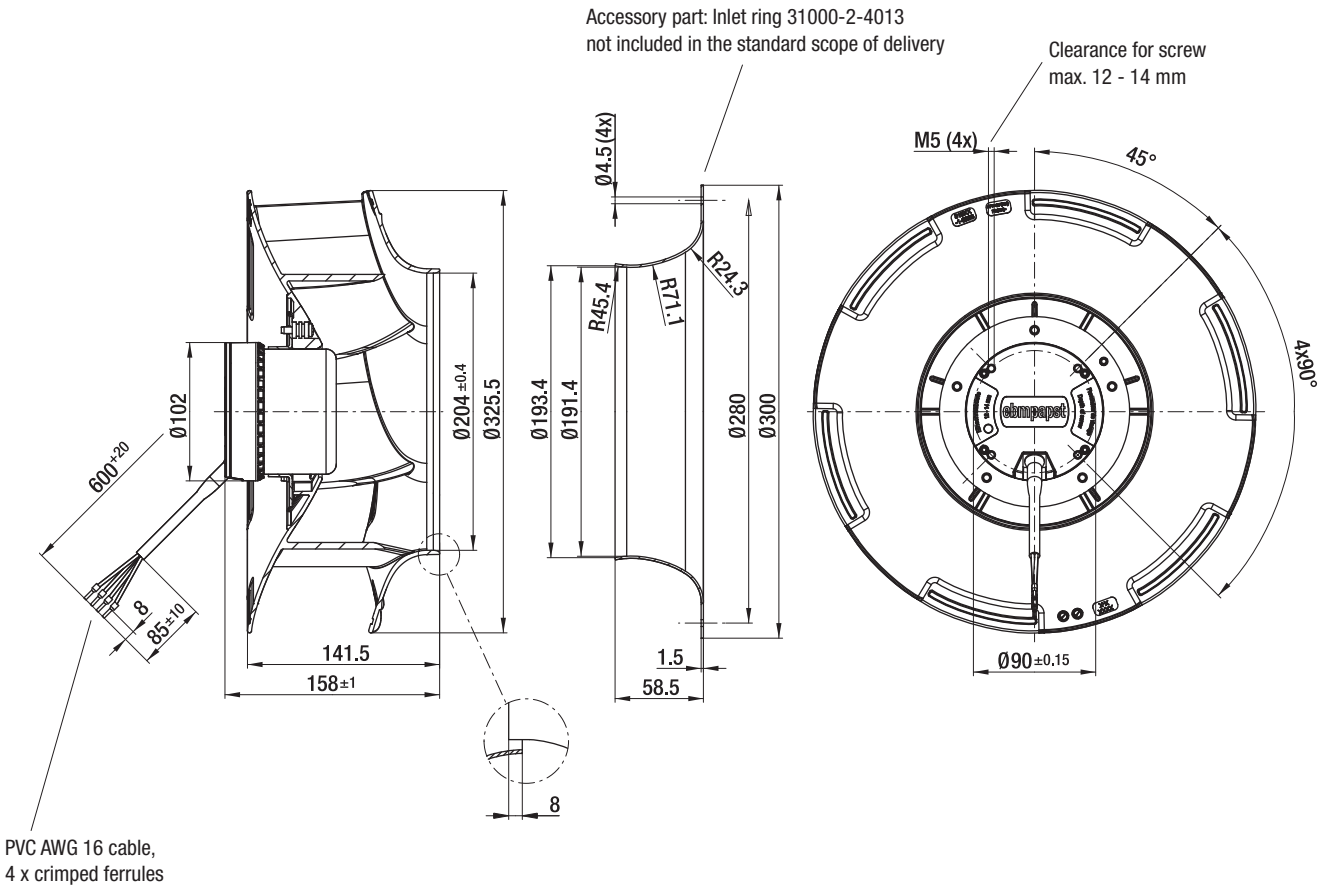

Max. 155 m³/h

# DC tangential fans

201...413 x 50 x 48 mm

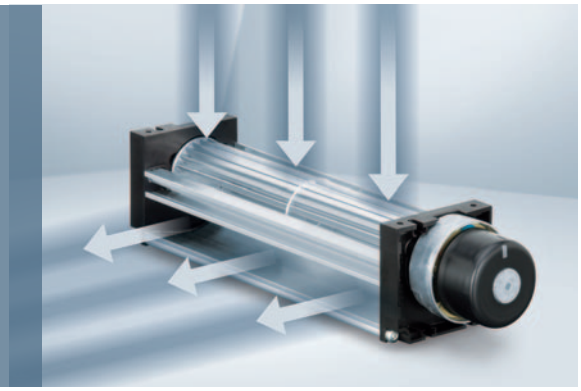

- **Material:** Housing: Aluminum
  Housing side parts: Plastic
  Impeller: Aluminum
- **Direction of air flow:** See photo
- **Connection:** via single wires AWG 24, TR 64
- **Highlights:** Motor with ball bearing system
  Impeller retaining plate with sleeve bearing
- **Weight:** 235 / 290 / 380 / 415 g

- **Possible special versions:**
  (See chapter DC fans - specials)
  - Speed signal
  - Moisture protection

| Series QG 030<br>VTS0030XUFBS<br>VTS0030XUFCS<br>**Nominal data** | Air flow | Air flow | **Nominal voltage** | Voltage range | Sound pressure level | Sound power level | Sintec sleeve bearings<br>Ball bearings | Power consumption | Temperature range | Service life $L_{10}$ (40 °C)<br>ebm-papst standard<br>Service life $L_{10}$ ($T_{max}$)<br>ebm-papst standard | Life expectancy $L_{10IPC}$<br>(40 °C) see page 15 | Curve |
|---|---|---|---|---|---|---|---|---|---|---|---|---|
| **Type** | **m³/h** | **cfm** | **VDC** | **VDC** | **db(A)** | **Bel(A)** | □/■ | **Watts** | **°C** | **Hours** | **Hours** | |
| QG 030-148/12 | 75 | 44 | **12** | 8...14 | 49 | 5.7 | □/■ | 6.2 | -20...+60 | 30 000 / 20 000 | 50 000 | ① |
| QG 030-198/12 | 100 | 59 | **12** | 8...14 | 51 | 5.8 | □/■ | 8,0 | -20...+60 | 30 000 / 20 000 | 50 000 | ② |
| QG 030-303/12 | 140 | 82 | **12** | 8...14 | 51 | 5.8 | □/■ | 8.7 | -20...+60 | 30 000 / 20 000 | 50 000 | ③ |
| QG 030-353/12 | 155 | 91 | **12** | 8...14 | 51 | 5.9 | □/■ | 9.6 | -20...+60 | 30 000 / 20 000 | 50 000 | ④ |
| QG 030-148/14 | 75 | 44 | **24** | 16...28 | 49 | 5.7 | □/■ | 6.2 | -20...+60 | 30 000 / 20 000 | 50 000 | ① |
| QG 030-198/14 | 100 | 59 | **24** | 16...28 | 51 | 5.8 | □/■ | 8.0 | -20...+60 | 30 000 / 20 000 | 50 000 | ② |
| QG 030-303/14 | 140 | 82 | **24** | 16...28 | 51 | 5.8 | □/■ | 8.7 | -20...+60 | 30 000 / 20 000 | 50 000 | ③ |
| QG 030-353/14 | 155 | 91 | **24** | 16...28 | 51 | 5.9 | □/■ | 9.6 | -20...+60 | 30 000 / 20 000 | 50 000 | ④ |

Subject to change

The values for service life were recorded with the fan installed horizontally.

| Type Dimension: | L | $L_1$ | Mass |
|---|---|---|---|
| **QG 030-148/ ..** | 203.4 $^{+1.5}$ | 148 | 235 g |
| **QG 030-198/ ..** | 260.4 $^{+1.5}$ | 198 | 290 g |
| **QG 030-303/ ..** | 365.4 $^{+1.5}$ | 303 | 380 g |
| **QG 030-353/ ..** | 415.4 $^{+1.5}$ | 353 | 415 g |

------ Tangential fans are suitable only for operation with high air flow and low back-pressure.

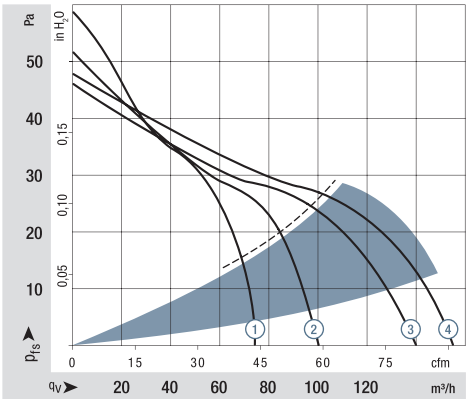


Air performance measured according to: ISO 5801.
Installation category A, without contact protection.
Noise: Total sound power level LWA ISO 10302 measured on a hemisphere with a radius of 2 m.
Sound pressure level LpA measured at 1 m distance to fan axis.
The values given are applicable only under the specified measuring conditions and may differ depending on the installation conditions.
In the event of deviation from the standard configuration, the parameters must be checked after installation!
For detailed information see http://www.ebmpapst.com/general conditions

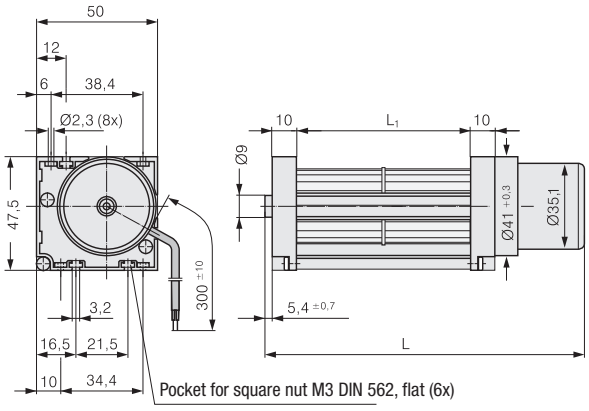




ebmpapst

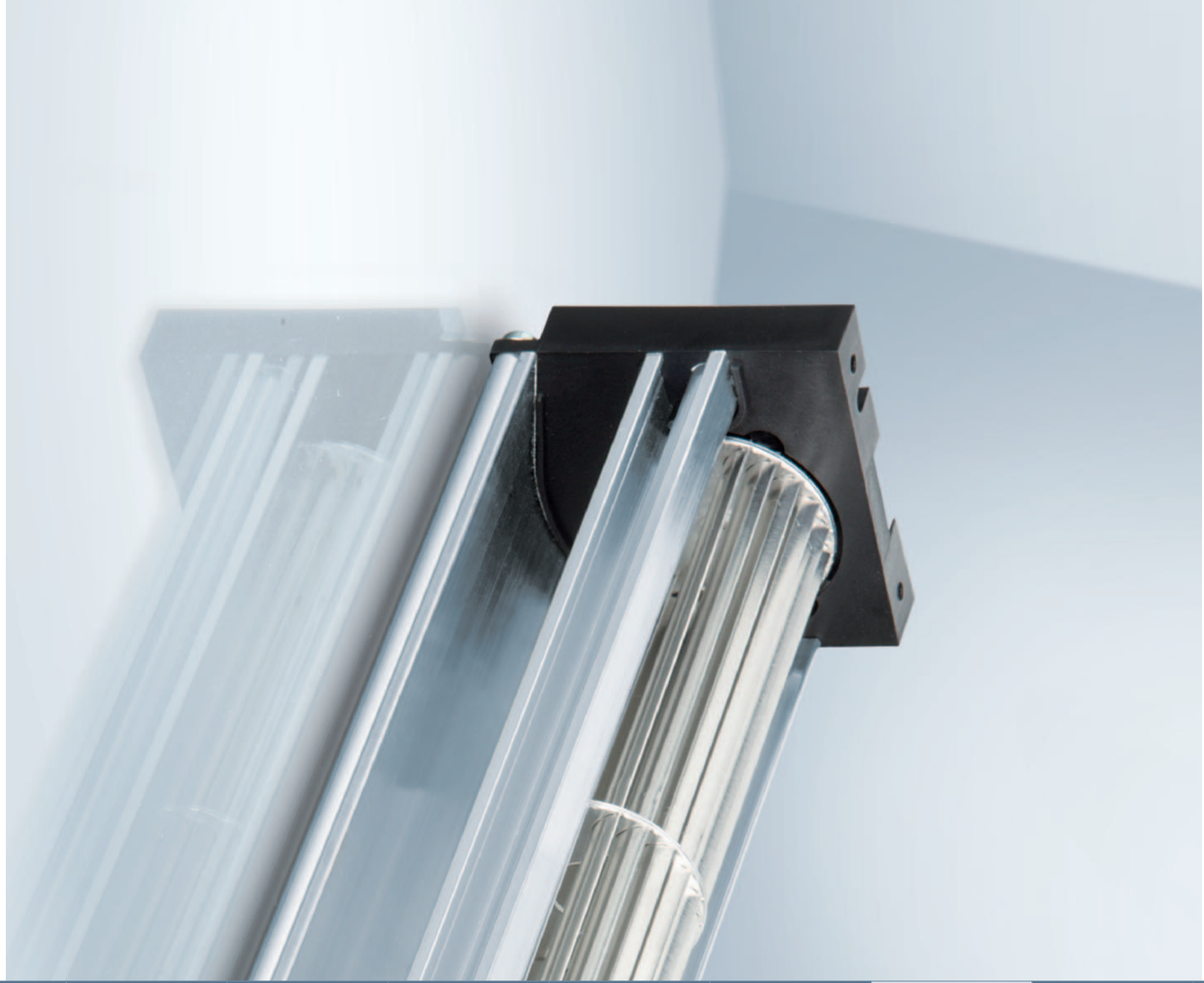

Max. 95 m³/h

# DC centrifugal fans and blowers

## Ø 85 mm

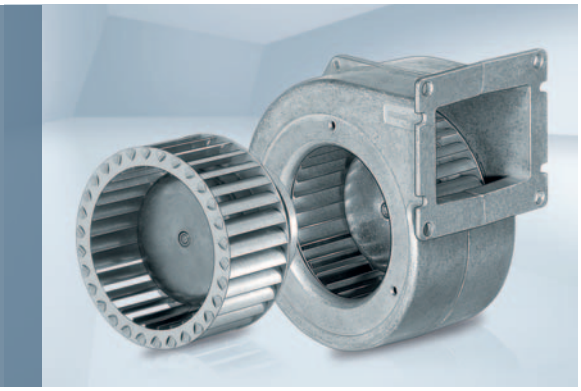

- **Material:** Housing: Die-cast aluminum<br>Impeller: Hot-dip galvanized sheet steel<br>Rotor: Galvanized
- **Direction of rotation:** Clockwise, looking towards rotor
- **Degree of protection:** IP 22
- **Insulation class:** "B"
- **Installation position:** Any
- **Condensation drainage holes:** None
- **Mode of operation:** Continuous operation (S1)
- **Bearings:** Maintenance-free ball bearings

VHS0085XUJCS

**Nominal data**

| Type | Motor | Curve | Nominal voltage | Nominal voltage range | Air flow | Nominal speed | Power consumption | Input current | Sound pressure level | Min. back-pressure | Admissible amb. temp. | Technical features and connection diagram |
|---|---|---|---|---|---|---|---|---|---|---|---|---|
| | | | VDC | VDC | m³/h | rpm⁻¹ | W | A | dB(A) | Pa | °C | |
| ***1G 085** | M1G045-BE | Ⓐ | 24 | 16-28 | 95 | 2850 | 14 | 0.64 | 57 | 0 | -25...+60 | p. 274 / G) |

Subject to change

**Curves:**

$U_N$ = nominal voltage (24 V /48 V)

$U_R$ = over-voltage (28 V / 57 V)

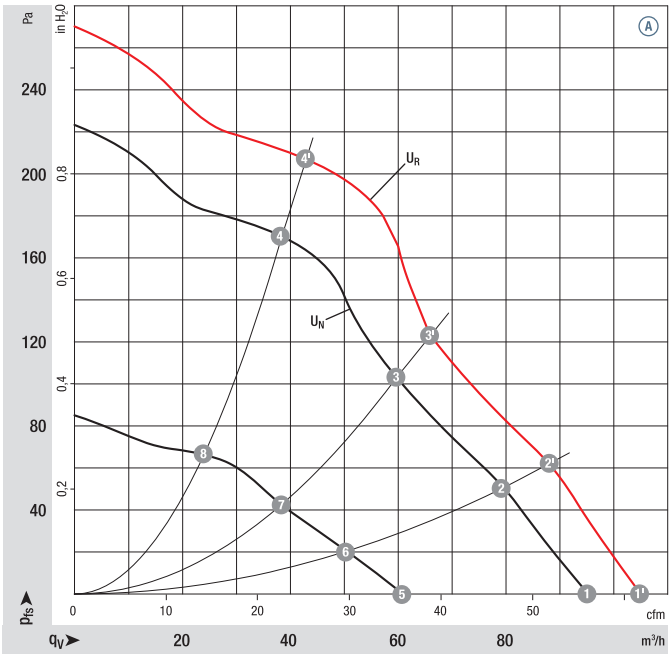


| | n rpm⁻¹ | $P_{ed}$ W | $Lp_A$ dB(A) | $\eta_{tL}$ % |
|---|---|---|---|---|
| Ⓐ 1' | 3180 | 19 | 59 | — |
| Ⓐ 2' | 3300 | 16 | 57 | 28 |
| Ⓐ 3' | 3500 | 15 | 57 | 32 |
| Ⓐ 4' | 3800 | 12 | 57 | 37 |
| Ⓐ 1 | 2850 | 14 | 57 | — |
| Ⓐ 2 | 3000 | 12 | 55 | 28 |
| Ⓐ 3 | 3180 | 11 | 55 | 32 |
| Ⓐ 4 | 3400 | 9 | 54 | 37 |
| Ⓐ 5 | 1890 | 5 | 46 | — |
| Ⓐ 6 | 1970 | 4 | 44 | 25 |
| Ⓐ 7 | 2070 | 4 | 44 | 30 |
| Ⓐ 8 | 2170 | 3 | 42 | 33 |

Air performance measured according to: ISO 5801, Installation category A, with ebm-papst scroll housing without contact protection. Suction-side noise levels: $L_WA$ according to ISO 13347, $L_pA$ measured at 1 m distance from fan axis. The values given are applicable only under the specified measuring conditions and may differ depending on the installation conditions. In the event of deviation from the standard configuration, the parameters must be checked after installation! For detailed information see http://www.ebmpapst.com/general conditions



ebmpapst

- **Technical features:** See connection diagram p. 274
- **Cable exit:** Axial
- **Conformity with standard(s):** EN 60950-1
- **Approvals:** EAC

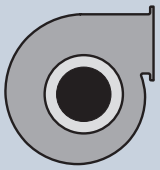

| Centrifugal blowers with flange | Weight centrifugal fans kg |
|---|---|
| G1G 085-AB05 -01 | 0.8 |

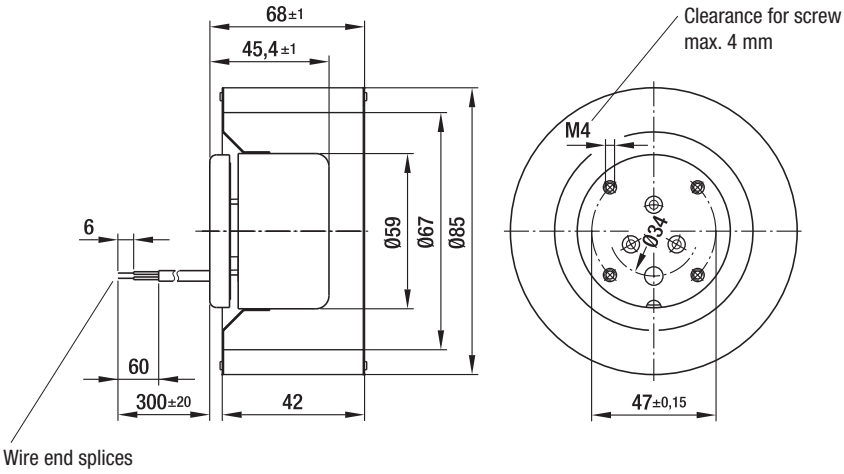


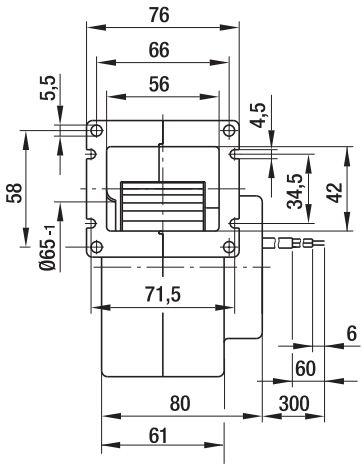


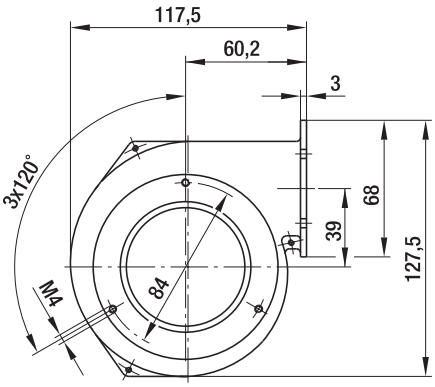

Max. 95 m³/h

# DC centrifugal fans and blowers

## Ø 97 mm

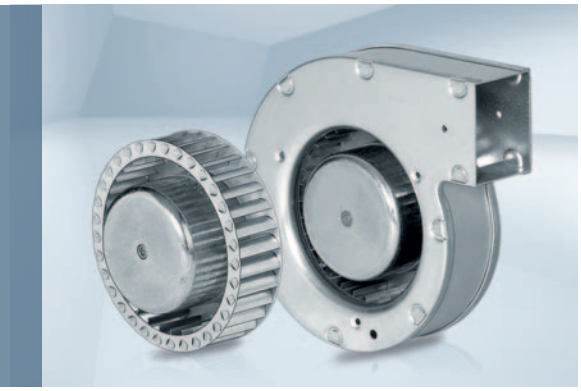

- **Material:** Housing: Hot-dip galvanized sheet steel
  Impeller: Hot-dip galvanized sheet steel
  Rotor: Galvanized
- **Direction of rotation:** Clockwise, looking towards rotor
- **Degree of protection:** IP 22
- **Insulation class:** "B"
- **Installation position:** Any
- **Condensation drainage holes:** None
- **Mode of operation:** Continuous operation (S1)
- **Bearings:** Maintenance-free ball bearings

VFS0097XUJCS
VHS0097XUJCS

**Nominal data**

| Type | Motor | Curve | Nominal voltage VDC | Nominal voltage range VDC | Air flow m³/h | Nominal speed rpm⁻¹ | Power consumption W | Input current A | Sound pressure level dB(A) | Min. back-pressure Pa | Admissible amb. temp. °C | Technical features and connection diagram |
|---|---|---|---|---|---|---|---|---|---|---|---|---|
| ***1G 097** | M1G045-BE | Ⓐ | 24 | 16-28 | 95 | 2650 | 16 | 0.75 | 59 | 0 | -25...+60 | p. 274 / G) |
| ***1G 097** | M1G045-BE | Ⓐ | 48 | 36-57 | 95 | 2650 | 16 | 0.38 | 59 | 0 | -25...+60 | p. 274 / G) |

Subject to change

**Curves:**

$U_N$ = nominal voltage (24 V /48 V)

$U_R$ = over-voltage (28 V / 57 V)

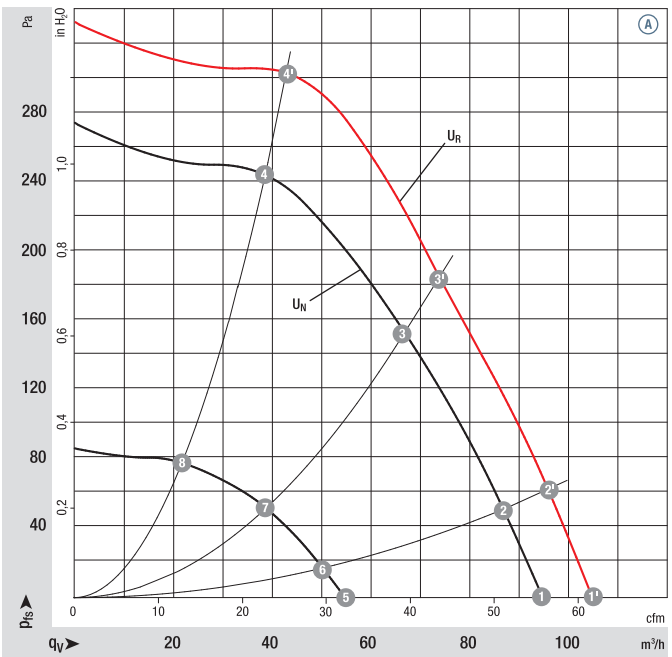


| | n rpm⁻¹ | $P_{ed}$ W | $Lp_A$ dB(A) | $\eta_{tL}$ % |
|---|---|---|---|---|
| Ⓐ 1' | 2920 | 22 | 62 | — |
| Ⓐ 2' | 3030 | 21 | 61 | 41 |
| Ⓐ 3' | 3300 | 17 | 59 | 48 |
| Ⓐ 4' | 3700 | 13 | 58 | 48 |
| Ⓐ 1 | 2650 | 16 | 59 | — |
| Ⓐ 2 | 2730 | 15 | 58 | 41 |
| Ⓐ 3 | 2960 | 13 | 56 | 48 |
| Ⓐ 4 | 3290 | 10 | 55 | 48 |
| Ⓐ 5 | 1615 | 4 | 45 | — |
| Ⓐ 6 | 1650 | 4 | 45 | 38 |
| Ⓐ 7 | 1745 | 4 | 43 | 46 |
| Ⓐ 8 | 1880 | 3 | 42 | 47 |

Air performance measured according to: ISO 5801, Installation category A, with ebm-papst scroll housing without contact protection. Suction-side noise levels: $L_W$A according to ISO 13347, $L_p$A measured at 1 m distance from fan axis. The values given are applicable only under the specified measuring conditions and may differ depending on the installation conditions. In the event of deviation from the standard configuration, the parameters must be checked after installation! For detailed information see http://www.ebmpapst.com/general conditions



ebmpapst

- **Technical features:** See connection diagram p. 274
- **Cable exit:** Axial
- **Conformity with standard(s):** EN 60950-1
- **Approvals:** EAC



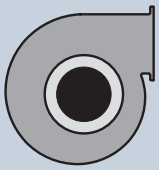

| Centrifugal fans | kg | Centrifugal blowers with flange | kg |
|---|---|---|---|
| **R1G 097-AA05 -01** | 0.5 | **G1G 097-AA05 -01** | 0.8 |
| **R1G 097-AA07 -07** | 0.5 | **G1G 097-AA07 -01** | 0.8 |

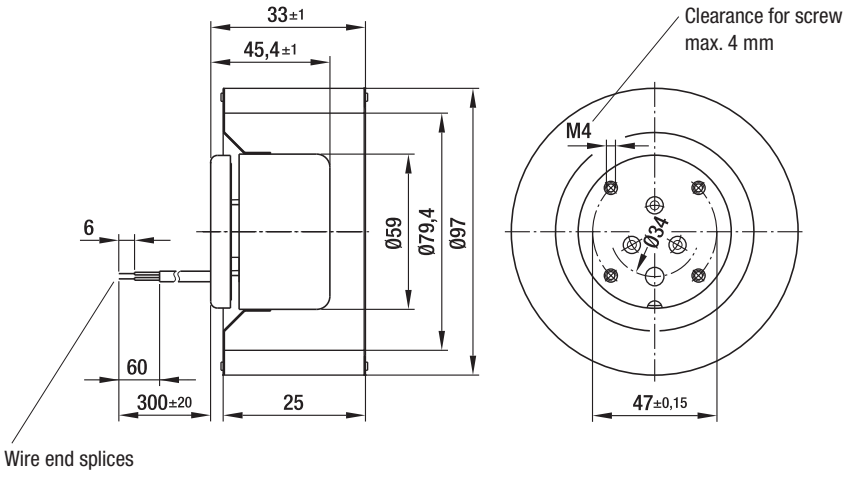


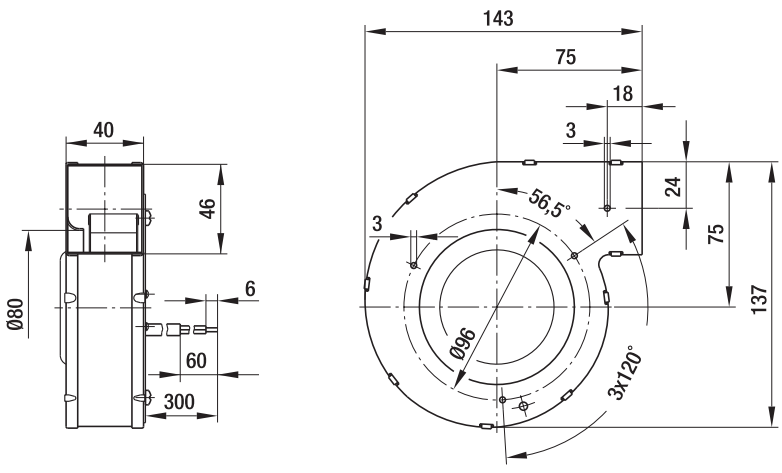

Max. 200 m³/h

# DC centrifugal fans and blowers

## Ø 108 mm



- **Material:** Housing: Die-cast aluminum<br>Impeller: Hot-dip galvanized sheet steel<br>Rotor: Painted black
- **Direction of rotation:** Clockwise, looking towards rotor
- **Degree of protection:** IP 22
- **Insulation class:** "B"
- **Installation position:** Any
- **Condensation drainage holes:** None
- **Mode of operation:** Continuous operation (S1)
- **Bearings:** Maintenance-free ball bearings

VFS0108XULCS
VHS0108XULCS

**Nominal data**

| Type | Motor | Curve | Nominal voltage | Nominal voltage range | Air flow | Nominal speed | Power consumption | Input current | Sound pressure level | Min. back-pressure | Admissible amb. temp. | Technical features and connection diagram |
|---|---|---|---|---|---|---|---|---|---|---|---|---|
| | | | VDC | VDC | m³/h | rpm⁻¹ | W | A | dB(A) | Pa | °C | |
| ***1G 108** | M1G055-BD | Ⓐ | 24 | 16-28 | 200 | 3000 | 42 | 2.00 | 65 | 0 | -25...+60 | p. 274 / G) |
| ***1G 108** | M1G055-BD | Ⓐ | 48 | 36-57 | 200 | 3000 | 42 | 1.00 | 65 | 0 | -25...+60 | p. 274 / G) |

Subject to change

**Curves:**

$U_N$ = nominal voltage (24 V /48 V)

$U_R$ = over-voltage (28 V / 57 V)

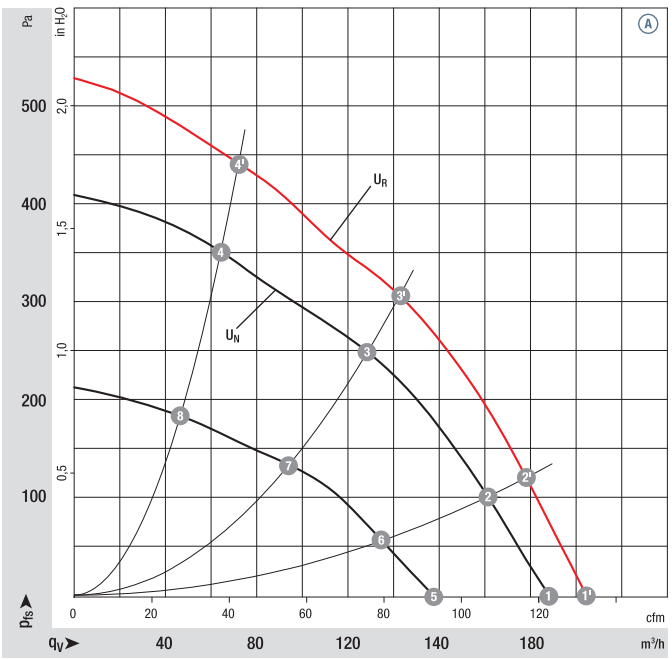


| | | n rpm⁻¹ | $P_{ed}$ W | $Lp_A$ dB(A) | $\eta_{tL}$ % |
|---|---|---|---|---|---|
| Ⓐ | 1' | 3230 | 55 | 67 | — |
| Ⓐ | 2' | 3410 | 52 | 66 | 33 |
| Ⓐ | 3' | 3800 | 43 | 65 | 41 |
| Ⓐ | 4' | 4100 | 35 | 64 | 33 |
| Ⓐ | 1 | 3000 | 42 | 65 | — |
| Ⓐ | 2 | 3140 | 40 | 64 | 33 |
| Ⓐ | 3 | 3420 | 32 | 63 | 41 |
| Ⓐ | 4 | 3690 | 26 | 63 | 33 |
| Ⓐ | 5 | 2300 | 20 | 61 | — |
| Ⓐ | 6 | 2380 | 17 | 58 | 33 |
| Ⓐ | 7 | 2550 | 14 | 55 | 41 |
| Ⓐ | 8 | 2720 | 11 | 55 | 33 |

Air performance measured according to: ISO 5801, Installation category A, with ebm-papst scroll housing without contact protection. Suction-side noise levels: $L_WA$ according to ISO 13347, $L_pA$ measured at 1 m distance from fan axis. The values given are applicable only under the specified measuring conditions and may differ depending on the installation conditions. In the event of deviation from the standard configuration, the parameters must be checked after installation! For detailed information see http://www.ebmpapst.com/general conditions



ebmpapst

- **Technical features:** See connection diagram p. 274
- **Cable exit:** Axial
- **Protection class:** I
- **Conformity with standard(s):** EN 60950-1
- **Approvals:** Ⓐ (24 VDC) UL, CSA, Ⓐ (48 VDC) CCC



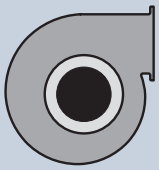

| Centrifugal fans | Weight centrifugal fans kg | Centrifugal blowers with flange | Weight centrifugal blowers kg |
|---|---|---|---|
| **R1G 108-AB17 -02** | 0.7 | **G1G 108-AB17 -02** | 1.4 |
| **R1G 108-AB41 -02** | 0.7 | **G1G 108-AB41 -02** | 1.4 |

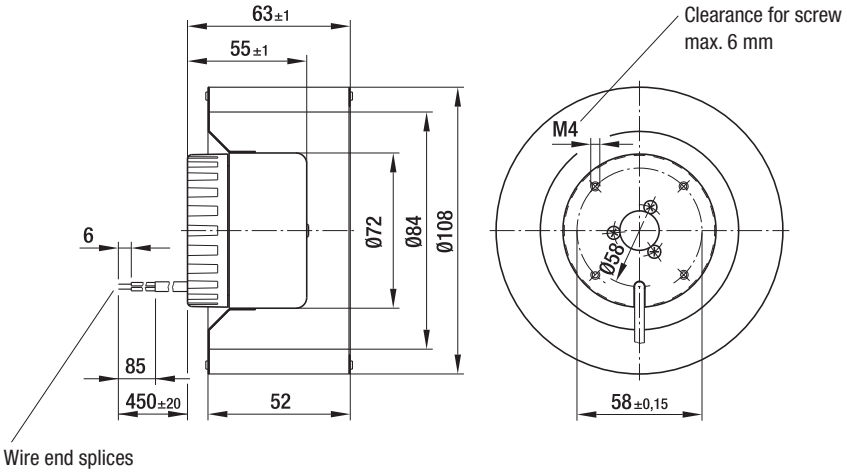


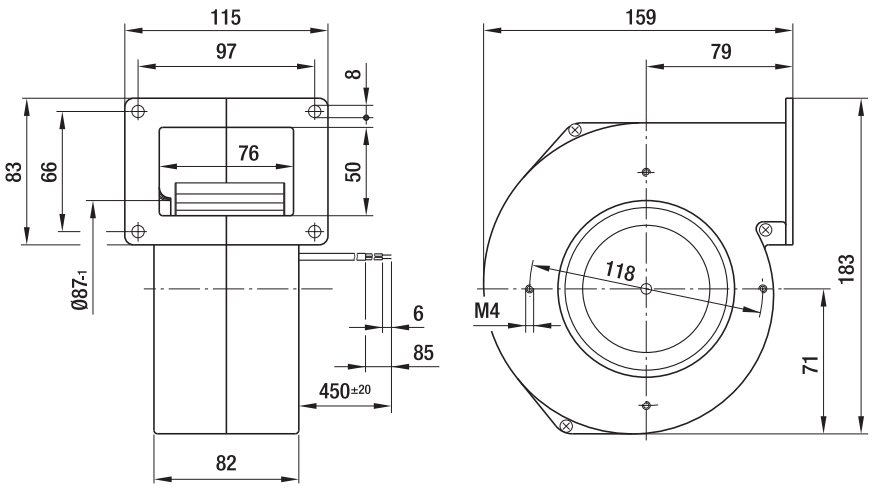

Max. 255 m³/h

# DC centrifugal fans and blowers

## Ø 120 mm



- **Material:** Housing: Die-cast aluminum<br>Impeller: Hot-dip galvanized sheet steel<br>Rotor: Galvanized
- **Direction of rotation:** Clockwise, looking towards rotor
- **Degree of protection:** IP 22
- **Insulation class:** "B"
- **Installation position:** Any
- **Condensation drainage holes:** None
- **Mode of operation:** Continuous operation (S1)
- **Bearings:** Maintenance-free ball bearings

VFS0120XULCS
VHS0120XULCS

**Nominal data**

| Type | Motor | Curve | Nominal voltage | Nominal voltage range | Air flow | Nominal speed | Power consumption | Input current | Sound pressure level | Min. back-pressure | Admissible amb. temp. | Technical features and connection diagram |
|---|---|---|---|---|---|---|---|---|---|---|---|---|
| | | | VDC | VDC | m³/h | rpm⁻¹ | W | A | dB(A) | Pa | °C | |
| ***1G 120** | M1G055-BD | Ⓐ | 24 | 16-28 | 255 | 2200 | 40 | 1.90 | 62 | 0 | -25...+60 | p. 274 / G) |
| ***1G 120** | M1G055-BD | Ⓐ | 48 | 36-57 | 255 | 2200 | 40 | 0.95 | 62 | 0 | -25...+60 | p. 274 / G) |

Subject to change

**Curves:**

$U_N$ = nominal voltage (24 V /48 V)

$U_R$ = over-voltage (28 V / 57 V)

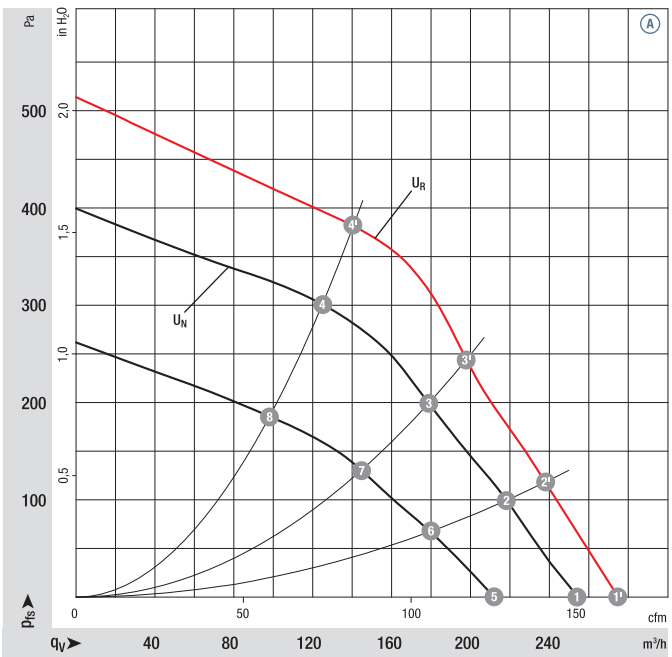


| | | n rpm⁻¹ | $P_{ed}$ W | $Lp_A$ dB(A) | $\eta_{tL}$ % |
|---|---|---|---|---|---|
| Ⓐ | 1' | 2410 | 50 | 63 | — |
| Ⓐ | 2' | 2620 | 47 | 62 | 58 |
| Ⓐ | 3' | 2870 | 44 | 61 | 60 |
| Ⓐ | 4' | 3200 | 36 | 62 | 55 |
| Ⓐ | 1 | 2200 | 40 | 62 | — |
| Ⓐ | 2 | 2410 | 36 | 60 | 59 |
| Ⓐ | 3 | 2600 | 32 | 58 | 62 |
| Ⓐ | 4 | 2880 | 25 | 58 | 55 |
| Ⓐ | 5 | 1870 | 24 | 55 | — |
| Ⓐ | 6 | 1990 | 21 | 54 | 58 |
| Ⓐ | 7 | 2100 | 18 | 53 | 61 |
| Ⓐ | 8 | 2310 | 14 | 54 | 54 |

Air performance measured according to: ISO 5801, Installation category A, with ebm-papst scroll housing without contact protection. Suction-side noise levels: $L_WA$ according to ISO 13347, $L_pA$ measured at 1 m distance from fan axis. The values given are applicable only under the specified measuring conditions and may differ depending on the installation conditions. In the event of deviation from the standard configuration, the parameters must be checked after installation! For detailed information see http://www.ebmpapst.com/general conditions



ebmpapst

- **Technical features:** See connection diagram p. 274
- **Cable exit:** Axial
- **Protection class:** I
- **Conformity with standard(s):** EN 60950-1
- **Approvals:** Ⓐ (24 VDC) UL, CSA, Ⓐ (48 VDC) CCC



Weight centrifugal fans

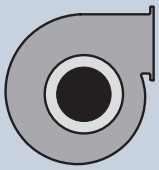

Weight centrifugal blowers

| Centrifugal fans | kg | Centrifugal blowers with flange | kg |
|---|---|---|---|
| **R1G 120-AB67 -02** | 0.8 | **G1G 120-AB67 -02** | 1.6 |
| **R1G 120-AB71 -02** | 0.8 | **G1G 120-AB71 -02** | 1.6 |

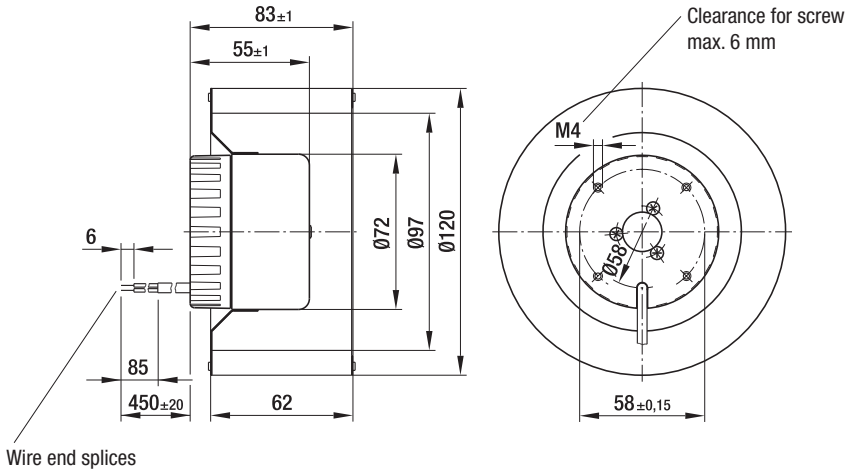


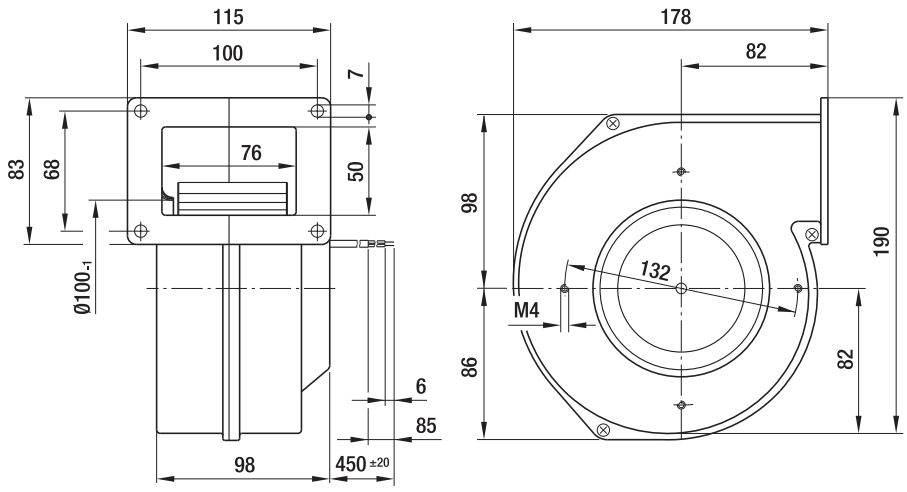

Max. 225 m³/h

# DC centrifugal fans and blowers

## Ø 133 mm

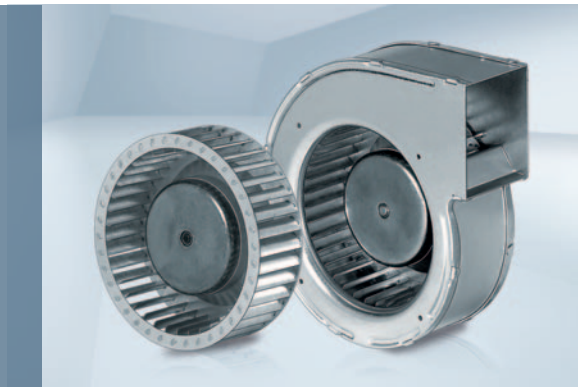

- **Material:** Housing: Hot-dip galvanized sheet steel
  Impeller: Hot-dip galvanized sheet steel
  Rotor: Galvanized
- **Direction of rotation:** Clockwise, looking towards rotor
- **Degree of protection:** IP 22
- **Insulation class:** "B"
- **Installation position:** Any
- **Condensation drainage holes:** None
- **Mode of operation:** Continuous operation (S1)
- **Bearings:** Maintenance-free ball bearings

VFS0133XULCS
VHS0133XULCS

**Nominal data**

| Type | Motor | Curve | Nominal voltage VDC | Nominal voltage range VDC | Air flow m³/h | Nominal speed rpm⁻¹ | Power consumption W | Input current A | Sound pressure level dB(A) | Min. back-pressure Pa | Admissible amb. temp. °C | Technical features and connection diagram |
|---|---|---|---|---|---|---|---|---|---|---|---|---|
| ***1G 133** | M1G055-BD | Ⓐ | 24 | 16-28 | 225 | 2000 | 40 | 2.20 | 64 | 0 | -25...+60 | p. 274 / G) |
| ***1G 133** | M1G055-BD | Ⓐ | 48 | 36-57 | 225 | 2000 | 40 | 1.10 | 64 | 0 | -25...+60 | p. 274 / G) |

Subject to change

**Curves:**

$U_N$ = nominal voltage (24 V /48 V)

$U_R$ = over-voltage (28 V / 57 V)

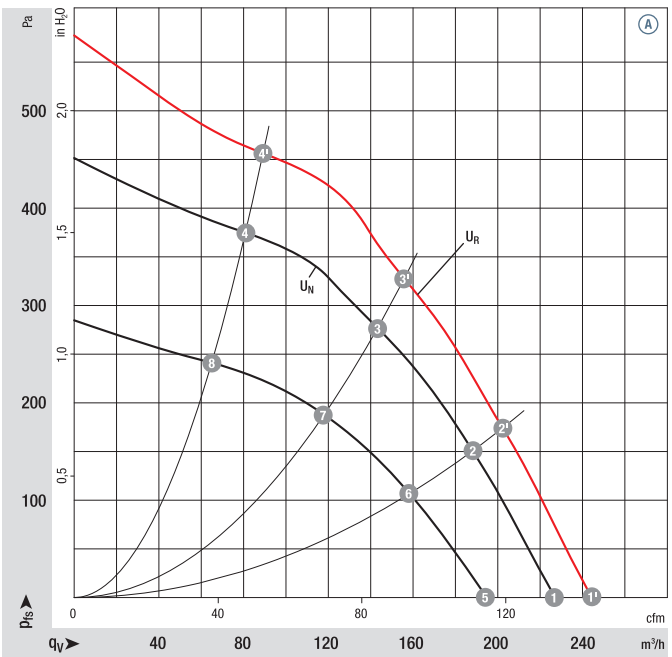


| | | n rpm⁻¹ | $P_{ed}$ W | $Lp_A$ dB(A) | $\eta_{tL}$ % |
|---|---|---|---|---|---|
| Ⓐ | 1' | 2170 | 57 | 66 | — |
| Ⓐ | 2' | 2410 | 51 | 66 | 47 |
| Ⓐ | 3' | 2750 | 44 | 64 | 49 |
| Ⓐ | 4' | 3200 | 36 | 66 | 32 |
| Ⓐ | 1 | 2000 | 45 | 64 | — |
| Ⓐ | 2 | 2230 | 40 | 64 | 49 |
| Ⓐ | 3 | 2540 | 35 | 62 | 51 |
| Ⓐ | 4 | 2920 | 27 | 63 | 33 |
| Ⓐ | 5 | 1750 | 28 | 60 | — |
| Ⓐ | 6 | 1910 | 24 | 59 | 50 |
| Ⓐ | 7 | 2120 | 20 | 58 | 53 |
| Ⓐ | 8 | 2370 | 15 | 59 | 35 |

Air performance measured according to: ISO 5801, Installation category A, with ebm-papst scroll housing without contact protection. Suction-side noise levels: $L_W$A according to ISO 13347, $L_p$A measured at 1 m distance from fan axis. The values given are applicable only under the specified measuring conditions and may differ depending on the installation conditions. In the event of deviation from the standard configuration, the parameters must be checked after installation! For detailed information see http://www.ebmpapst.com/general conditions



ebmpapst

- **Technical features:** See connection diagram p. 274
- **Cable exit:** Lateral
- **Protection class:** I
- **Conformity with standard(s):** EN 60950-1
- **Approvals:** Ⓐ (24 VDC) UL, CSA, Ⓐ (48 VDC) CCC



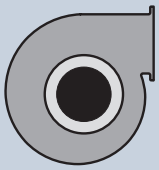

| Centrifugal fans | Weight centrifugal fans kg | Centrifugal blowers with flange | Weight centrifugal blowers kg |
|---|---|---|---|
| **R1G 133-AE19 -02** | 0.7 | **G1G 133-DE19 -02** | 1.3 |
| **R1G 133-AE03 -02** | 0.7 | **G1G 133-DE03 -02** | 1.3 |

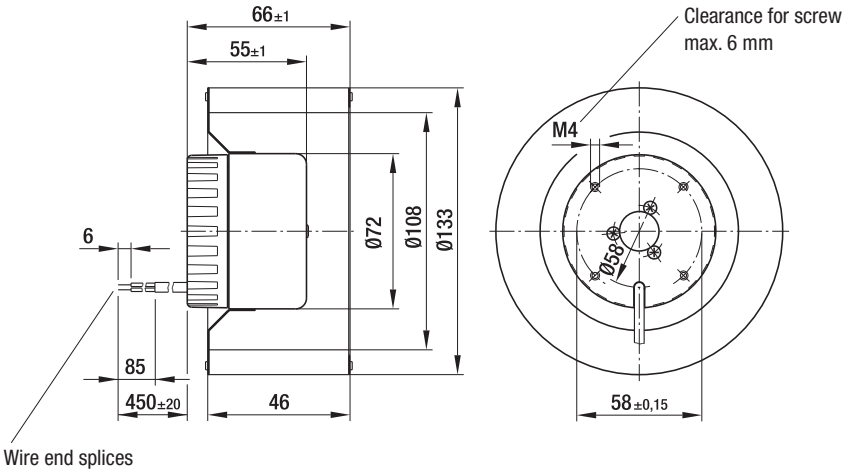


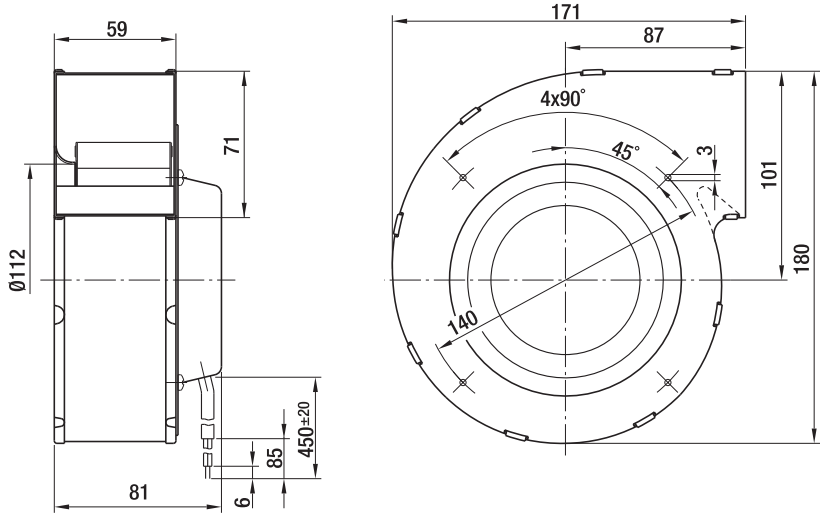

Max. 410 m³/h

# DC centrifugal fans and blowers

## Ø 140 mm



- **Material:** Housing: Die-cast aluminum<br>Impeller: Hot-dip galvanized sheet steel<br>Rotor: Painted black
- **Direction of rotation:** Clockwise, looking towards rotor
- **Degree of protection:** IP 22
- **Insulation class:** "B"
- **Installation position:** Any
- **Condensation drainage holes:** None
- **Mode of operation:** Continuous operation (S1)
- **Bearings:** Maintenance-free ball bearings

VFS0140XULES
VHS0140XULES

**Nominal data**

| Type | Motor | Curve | Nominal voltage | Nominal voltage range | Air flow | Nominal speed | Power consumption | Input current | Sound pressure level | Min. back-pressure | Admissible amb. temp. | Technical features and connection diagram |
|---|---|---|---|---|---|---|---|---|---|---|---|---|
| | | | VDC | VDC | m³/h | rpm⁻¹ | W | A | dB(A) | Pa | °C | |
| ***1G 140** | M1G055-BD | Ⓐ | 24 | 16-28 | 400 | 1750 | 54 | 2.50 | 63 | 0 | -25...+60 | p. 274 / G) |
| ***1G 140** | M1G055-BD | Ⓐ | 48 | 36-57 | 410 | 1750 | 54 | 1.30 | 63 | 0 | -25...+60 | p. 274 / G) |

Subject to change

**Curves:**

$U_N$ = nominal voltage (24 V /48 V)

$U_R$ = over-voltage (28 V / 57 V)

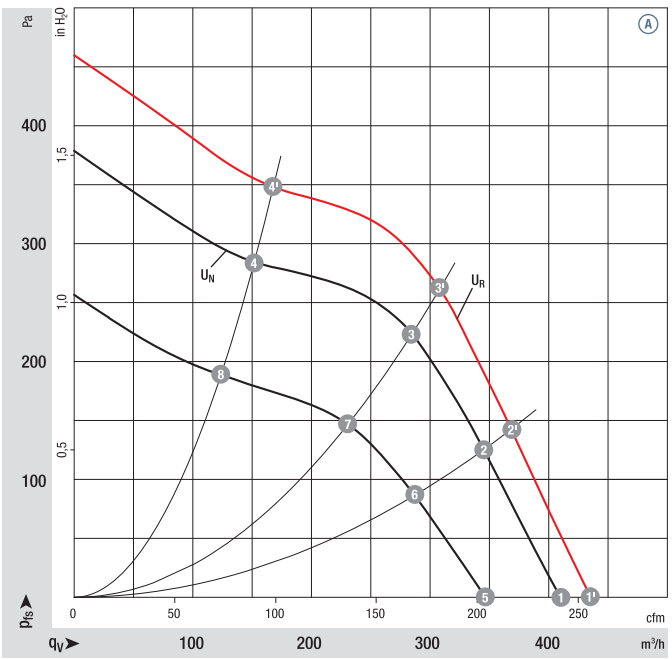


| | n rpm⁻¹ | $P_{ed}$ W | $Lp_A$ dB(A) | $\eta_{tL}$ % |
|---|---|---|---|---|
| Ⓐ 1' | 1850 | 65 | 64 | — |
| Ⓐ 2' | 2020 | 61 | 61 | 50 |
| Ⓐ 3' | 2200 | 57 | 59 | 54 |
| Ⓐ 4' | 2550 | 43 | 60 | 40 |
| Ⓐ 1 | 1750 | 54 | 63 | — |
| Ⓐ 2 | 1900 | 50 | 59 | 51 |
| Ⓐ 3 | 2030 | 45 | 58 | 54 |
| Ⓐ 4 | 2310 | 32 | 58 | 40 |
| Ⓐ 5 | 1500 | 34 | 60 | — |
| Ⓐ 6 | 1580 | 29 | 56 | 50 |
| Ⓐ 7 | 1670 | 25 | 54 | 53 |
| Ⓐ 8 | 1880 | 19 | 53 | 41 |

Air performance measured according to: ISO 5801, Installation category A, with ebm-papst scroll housing without contact protection. Suction-side noise levels: $L_WA$ according to ISO 13347, $L_pA$ measured at 1 m distance from fan axis. The values given are applicable only under the specified measuring conditions and may differ depending on the installation conditions. In the event of deviation from the standard configuration, the parameters must be checked after installation! For detailed information see http://www.ebmpapst.com/general conditions



ebmpapst

- **Technical features:** See connection diagram p. 274
- **Cable exit:** Axial
- **Protection class:** I
- **Conformity with standard(s):** EN 60950-1
- **Approvals:** Ⓐ (48 VDC) CCC



Weight centrifugal fans

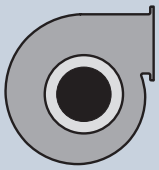

Weight centrifugal blowers

| Centrifugal fans | kg | Centrifugal blowers with flange | kg |
|---|---|---|---|
| **R1G 140-AV17 -02** | 1.0 | **G1G 140-AV17 -02** | 2.3 |
| **R1G 140-AV21 -02** | 1.0 | **G1G 140-AV21 -02** | 2.3 |

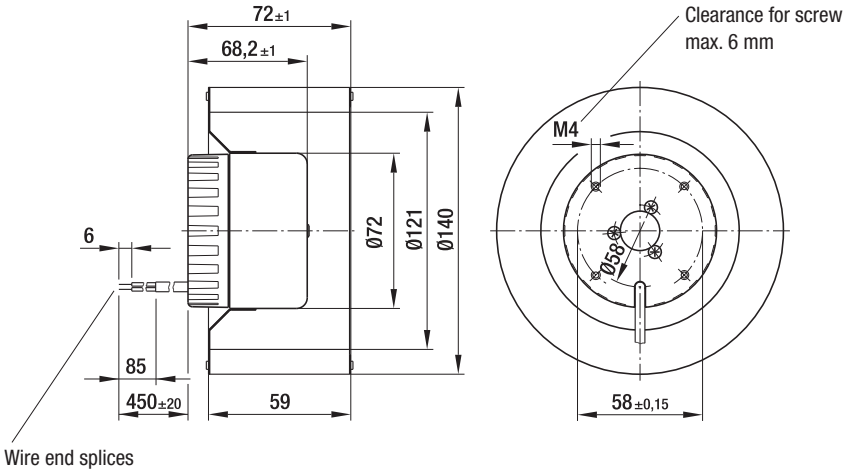


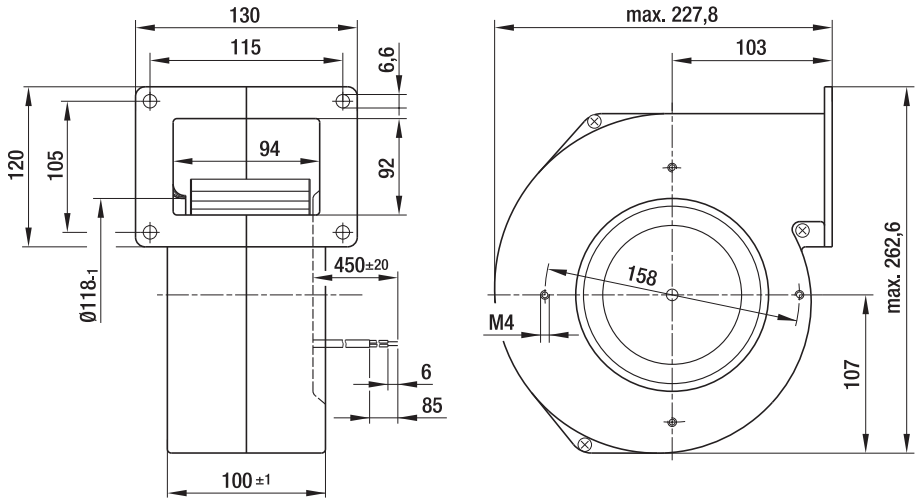

Max. 470 m³/h

# DC centrifugal fans and blowers

## Ø 146 mm



- **Material:** Housing: Die-cast aluminum<br>Impeller: Hot-dip galvanized sheet steel<br>Rotor: Painted black
- **Direction of rotation:** Clockwise, looking towards rotor
- **Degree of protection:** IP 42
- **Insulation class:** "B"
- **Installation position:** Any
- **Condensation drainage holes:** None
- **Mode of operation:** Continuous operation (S1)
- **Bearings:** Maintenance-free ball bearings

VFS0146XUNCS
VHS0146XUNCS

**Nominal data**

| Type | Motor | Curve | Nominal voltage | Nominal voltage range | Air flow | Nominal speed | Power consumption | Input current | Sound pressure level | Min. back-pressure | Admissible amb. temp. | Technical features and connection diagram |
|---|---|---|---|---|---|---|---|---|---|---|---|---|
| | | | VDC | VDC | m³/h | rpm⁻¹ | W | A | dB(A) | Pa | °C | |
| ***1G 146** | M1G074-BF | Ⓐ | 24 | 16-28 | 470 | 2200 | 100 | 5.00 | 68 | 0 | -25...+60 | p. 274 / G) |
| ***1G 146** | M1G074-BF | Ⓐ | 48 | 36-57 | 465 | 2150 | 100 | 2.60 | 67 | 0 | -25...+60 | p. 274 / G) |

Subject to change

**Curves:**

$U_N$ = nominal voltage (24 V /48 V)

$U_R$ = over-voltage (28 V / 57 V)

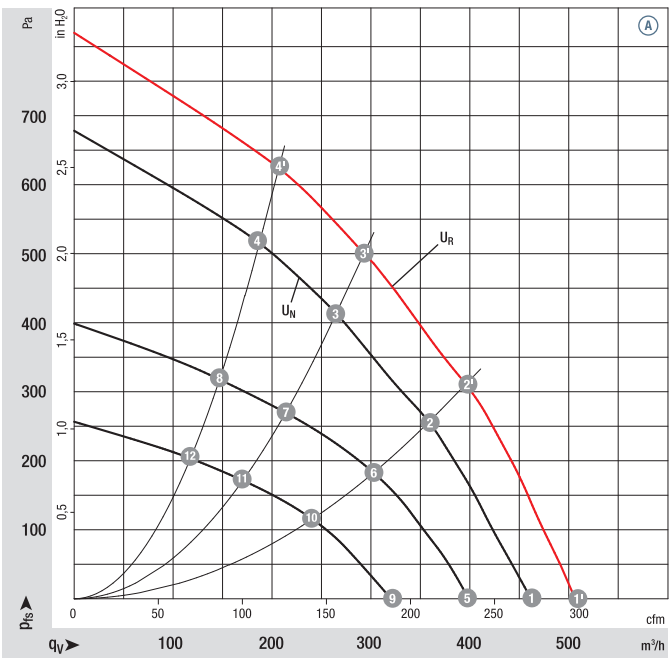


| | n rpm⁻¹ | $P_{ed}$ W | $Lp_A$ dB(A) | $\eta_{tL}$ % |
|---|---|---|---|---|
| Ⓐ 1' | 2400 | 140 | 70 | — |
| Ⓐ 2' | 2650 | 130 | 67 | 45 |
| Ⓐ 3' | 3000 | 110 | 66 | 49 |
| Ⓐ 4' | 3300 | 100 | 67 | 45 |
| Ⓐ 1 | 2200 | 100 | 68 | — |
| Ⓐ 2 | 2445 | 90 | 65 | 46 |
| Ⓐ 3 | 2750 | 84 | 64 | 49 |
| Ⓐ 4 | 3025 | 77 | 65 | 45 |
| Ⓐ 5 | 1890 | 68 | 63 | — |
| Ⓐ 6 | 2075 | 57 | 60 | 46 |
| Ⓐ 7 | 2250 | 48 | 61 | 49 |
| Ⓐ 8 | 2335 | 41 | 61 | 45 |
| Ⓐ 9 | 1520 | 37 | 59 | — |
| Ⓐ 10 | 1670 | 32 | 55 | 46 |
| Ⓐ 11 | 1815 | 27 | 55 | 49 |
| Ⓐ 12 | 1920 | 23 | 55 | 45 |

Air performance measured according to: ISO 5801, Installation category A, with ebm-papst scroll housing without contact protection. Suction-side noise levels: $L_WA$ according to ISO 13347, $L_pA$ measured at 1 m distance from fan axis. The values given are applicable only under the specified measuring conditions and may differ depending on the installation conditions. In the event of deviation from the standard configuration, the parameters must be checked after installation! For detailed information see http://www.ebmpapst.com/general conditions



ebmpapst

- **Technical features:** See connection diagram p. 274
- **Cable exit:** Axial
- **Protection class:** I
- **Conformity with standard(s):** EN 60950-1
- **Approvals:** UL, CSA, CCC (only centrifugal blowers)



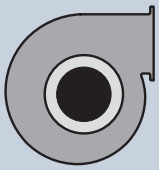

| Centrifugal fans | kg | Centrifugal blowers with flange | kg |
|---|---|---|---|
| **R1G 146-AA07 -52** | 1.4 | **G1G 146-BA07 -52** | 2.8 |
| **R1G 146-AA11 -52** | 1.4 | **G1G 146-BA11 -52** | 2.8 |

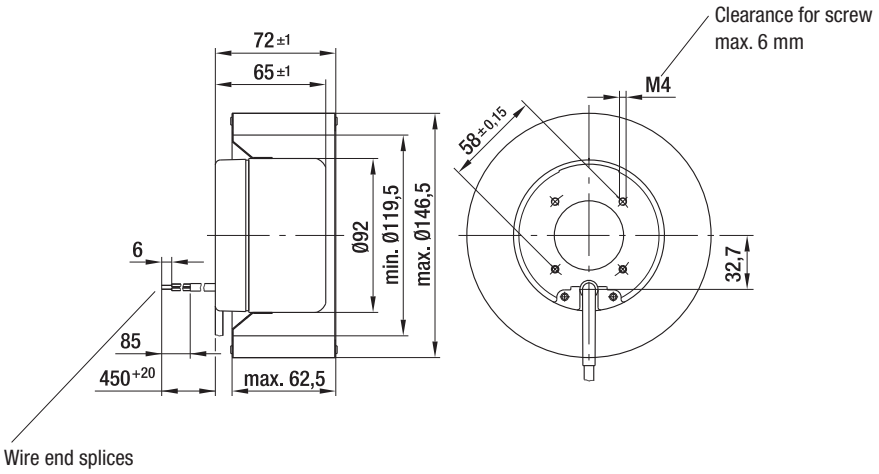


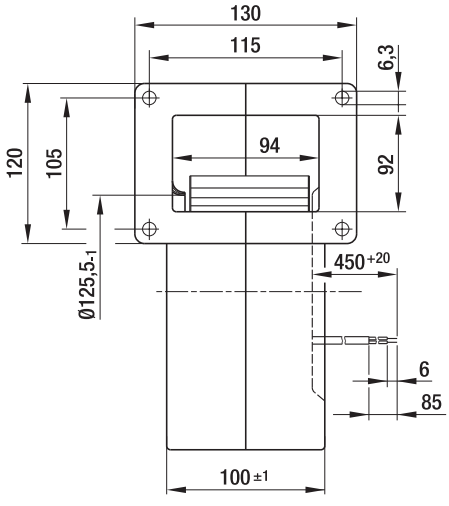


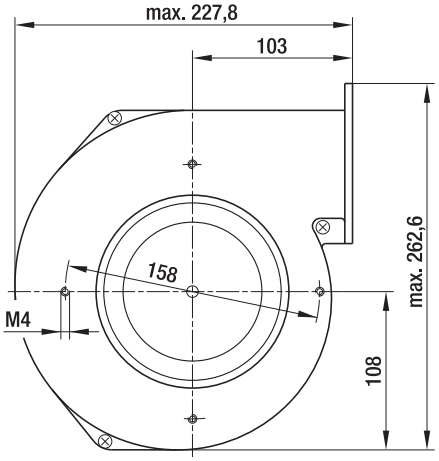

Max. 505 m³/h

# DC centrifugal fans and blowers

## Ø 160 mm

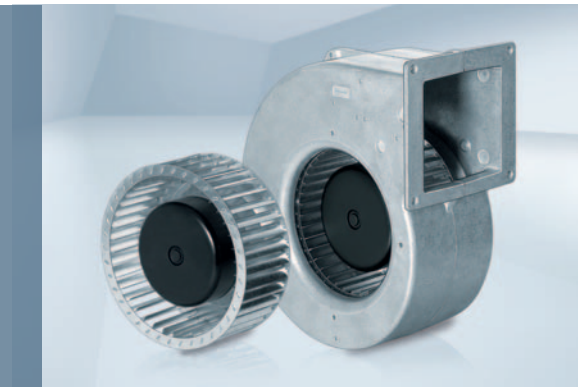

- **Material:** Housing: Die-cast aluminum<br>Impeller: Hot-dip galvanized sheet steel<br>Rotor: Painted black
- **Direction of rotation:** Clockwise, looking towards rotor
- **Degree of protection:** IP 42
- **Insulation class:** "B"
- **Installation position:** Any
- **Condensation drainage holes:** None
- **Mode of operation:** Continuous operation (S1)
- **Bearings:** Maintenance-free ball bearings

VFS0160XUNCS
VHS0160XUNCS

**Nominal data**

| Type | Motor | Curve | Nominal voltage | Nominal voltage range | Air flow | Nominal speed | Power consumption | Input current | Sound pressure level | Min. back-pressure | Admissible amb. temp. | Technical features and connection diagram |
|---|---|---|---|---|---|---|---|---|---|---|---|---|
| | | | VDC | VDC | m³/h | rpm⁻¹ | W | A | dB(A) | Pa | °C | |
| ***1G 160** | M1G074-BF | Ⓐ | 24 | 16-28 | 505 | 1750 | 105 | 5.80 | 67 | 0 | -25...+60 | p. 274 / G) |
| ***1G 160** | M1G074-BF | Ⓐ | 48 | 36-57 | 505 | 1750 | 105 | 2.90 | 67 | 0 | -25...+60 | p. 274 / G) |

Subject to change

**Curves:**

$U_N$ = nominal voltage (24 V /48 V)

$U_R$ = over-voltage (28 V / 57 V)

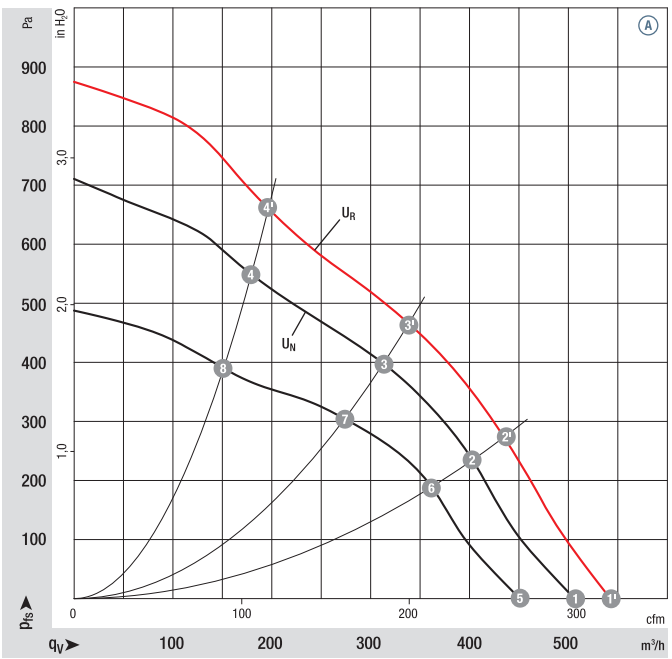


| | n rpm⁻¹ | $P_{ed}$ W | $Lp_A$ dB(A) | $\eta_{tL}$ % |
|---|---|---|---|---|
| Ⓐ 1' | 1890 | 134 | 68 | — |
| Ⓐ 2' | 2200 | 118 | 67 | 52 |
| Ⓐ 3' | 2500 | 110 | 67 | 57 |
| Ⓐ 4' | 2900 | 102 | 69 | 52 |
| Ⓐ 1 | 1750 | 105 | 67 | — |
| Ⓐ 2 | 2030 | 95 | 66 | 52 |
| Ⓐ 3 | 2270 | 90 | 65 | 57 |
| Ⓐ 4 | 2550 | 81 | 67 | 44 |
| Ⓐ 5 | 1580 | 72 | 62 | — |
| Ⓐ 6 | 1810 | 66 | 62 | 52 |
| Ⓐ 7 | 2000 | 58 | 62 | 57 |
| Ⓐ 8 | 2200 | 48 | 63 | 54 |

Air performance measured according to: ISO 5801, Installation category A, with ebm-papst scroll housing without contact protection. Suction-side noise levels: $L_WA$ according to ISO 13347, $L_pA$ measured at 1 m distance from fan axis. The values given are applicable only under the specified measuring conditions and may differ depending on the installation conditions. In the event of deviation from the standard configuration, the parameters must be checked after installation! For detailed information see http://www.ebmpapst.com/general conditions



ebmpapst

- **Technical features:** See connection diagram p. 274
- **Cable exit:** Axial
- **Protection class:** I
- **Conformity with standard(s):** EN 60950-1
- **Approvals:** UL, CSA



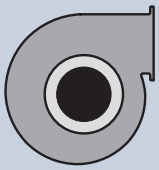

| Centrifugal fans | Weight centrifugal fans kg | Centrifugal blowers with flange | Weight centrifugal blowers kg |
|---|---|---|---|
| **R1G 160-AH29 -52** | 1.4 | **G1G 160-BH29 -52** | 2.8 |
| **R1G 160-AH39 -52** | 1.4 | **G1G 160-BH39 -52** | 2.8 |

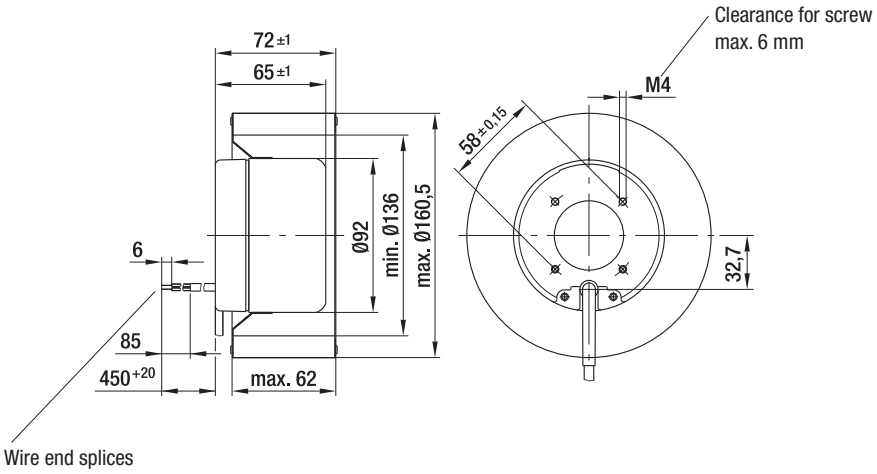


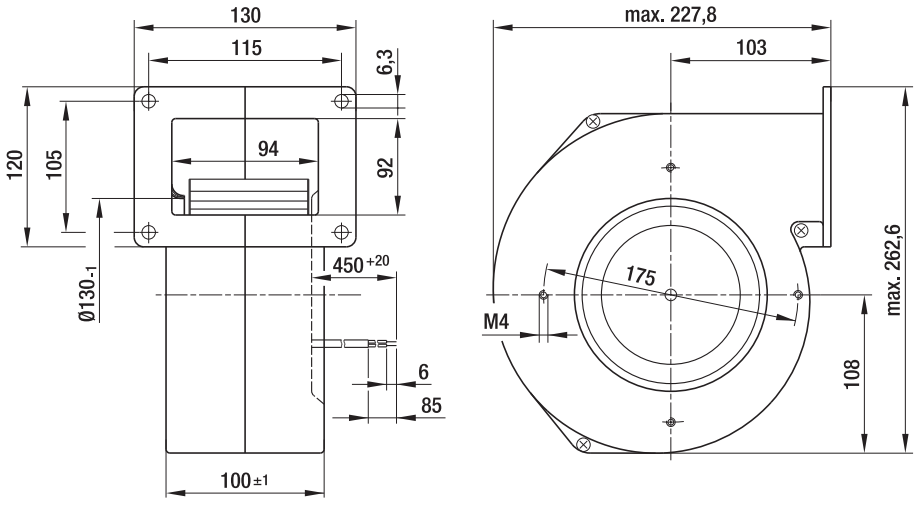

Max. 700 m³/h

# DC centrifugal blowers

## Ø 133 mm



- **Material:** Housing: Galvanized sheet steel<br>Impeller: Galvanized sheet steel<br>Rotor: Painted black
- **Direction of rotation:** Clockwise, looking towards rotor
- **Degree of protection:** IP 42
- **Insulation class:** "B"
- **Installation position:** Any
- **Condensation drainage holes:** None
- **Mode of operation:** Continuous operation (S1)
- **Design:** SAL motor mounted with vibration damping on both sides
- **Bearings:** Maintenance-free ball bearings

VHD0133CUNCS

**Nominal data**

| Type | Motor | Curve | Nominal voltage | Nominal voltage range | Air flow | Nominal speed | Power consumption | Input current | Sound pressure level | Min. back-pressure | Admissible amb. temp. | Technical features and connection diagram |
|---|---|---|---|---|---|---|---|---|---|---|---|---|
| | | | VDC | VDC | m³/h | rpm⁻¹ | W | A | dB(A) | Pa | °C | |
| **D1G 133** | M1G074-BF | Ⓐ | 24 | 16-28 | 700 | 1780 | 105 | 5.60 | 62 | 50 | -25...+60 | p. 274 / G) |
| **D1G 133** | M1G074-BF | Ⓐ | 48 | 36-57 | 700 | 1780 | 105 | 2.80 | 62 | 50 | -25...+60 | p. 274 / G) |

Subject to change

**Curves:**

$U_N$ = nominal voltage (24 V /48 V)

$U_R$ = over-voltage (28 V / 57 V)

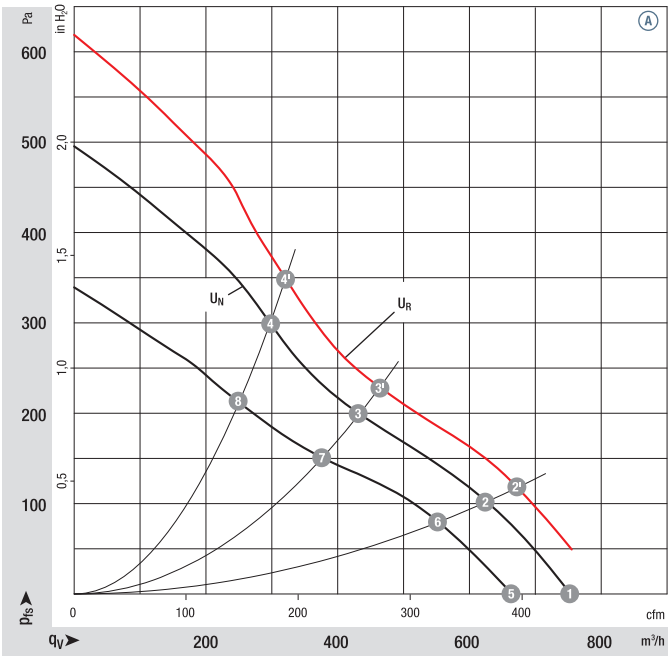


| | | n rpm⁻¹ | $P_{ed}$ W | $Lp_A$ dB(A) | $\eta_{tL}$ % |
|---|---|---|---|---|---|
| Ⓐ | 1' | — | — | — | — |
| Ⓐ | 2' | 2050 | 121 | 63 | 49 |
| Ⓐ | 3' | 2490 | 106 | 62 | 41 |
| Ⓐ | 4' | 2820 | 100 | 62 | 37 |
| Ⓐ | 1 | 1780 | 105 | 62 | — |
| Ⓐ | 2 | 1900 | 97 | 61 | 49 |
| Ⓐ | 3 | 2310 | 86 | 59 | 41 |
| Ⓐ | 4 | 2630 | 80 | 60 | 37 |
| Ⓐ | 5 | 1500 | 73 | 59 | — |
| Ⓐ | 6 | 1720 | 67 | 57 | 49 |
| Ⓐ | 7 | 2020 | 58 | 56 | 41 |
| Ⓐ | 8 | 2230 | 49 | 56 | 37 |

Air performance measured according to: ISO 5801, Installation category A, with ebm-papst scroll housing without contact protection. Suction-side noise levels: $L_WA$ according to ISO 13347, $L_pA$ measured at 1 m distance from fan axis. The values given are applicable only under the specified measuring conditions and may differ depending on the installation conditions. In the event of deviation from the standard configuration, the parameters must be checked after installation! For detailed information see http://www.ebmpapst.com/general conditions



ebmpapst

- **Technical features:** See connection diagram p. 274
- **Cable exit:** Variable
- **Protection class:** I
- **Conformity with standard(s):** EN 60950-1
- **Approvals:** UL, CSA; Ⓐ (48 VDC) also CCC

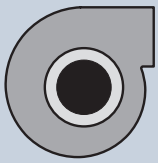

| Centrifugal blowers without flange | Weight centrifugal blowers kg |
|---|---|
| D1G 133-AB29 -52 | 3.3 |
| D1G 133-AB39 -52 | 3.3 |

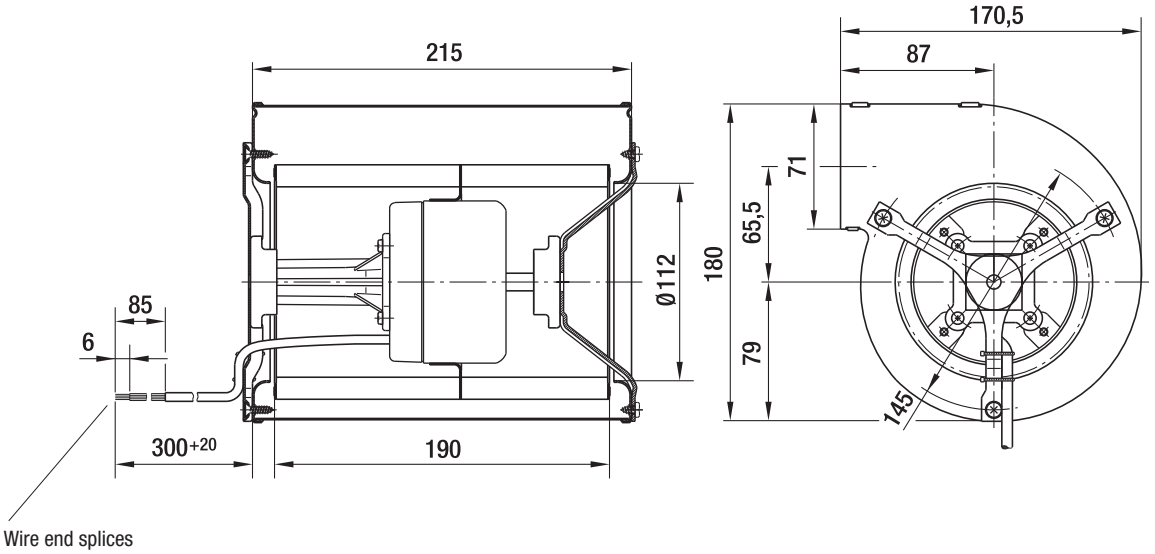

Max. 1020 m³/h

# DC centrifugal blowers

## Ø 133 mm



- **Material:** Housing: Galvanized sheet steel
  Impeller: Galvanized sheet steel
  Rotor: Painted black
- **Direction of rotation:** Clockwise, looking towards rotor
- **Degree of protection:** IP 42
- **Insulation class:** "B"
- **Installation position:** Any
- **Condensation drainage holes:** None
- **Mode of operation:** Continuous operation (S1)
- **Design:** SAL motor mounted with vibration damping on both sides
- **Bearings:** Maintenance-free ball bearings

VHD0133XUNES

**Nominal data**

| Type | Motor | Curve | Nominal voltage VDC | Nominal voltage range VDC | Air flow m³/h | Nominal speed rpm⁻¹ | Power consumption W | Input current A | Sound pressure level dB(A) | Min. back-pressure Pa | Admissible amb. temp. °C | Technical features and connection diagram |
|---|---|---|---|---|---|---|---|---|---|---|---|---|
| **D1G 133** | M1G074-BF | Ⓐ | 24 | 16-28 | 1020 | 1580 | 118 | 6.00 | 64 | 0 | -25...+60 | p. 274 / G) |
| **D1G 133** | M1G074-BF | Ⓐ | 48 | 36-57 | 1020 | 1580 | 118 | 3.00 | 64 | 0 | -25...+60 | p. 274 / G) |

Subject to change

**Curves:**

$U_N$ = nominal voltage (24 V /48 V)

$U_R$ = over-voltage (28 V / 57 V)

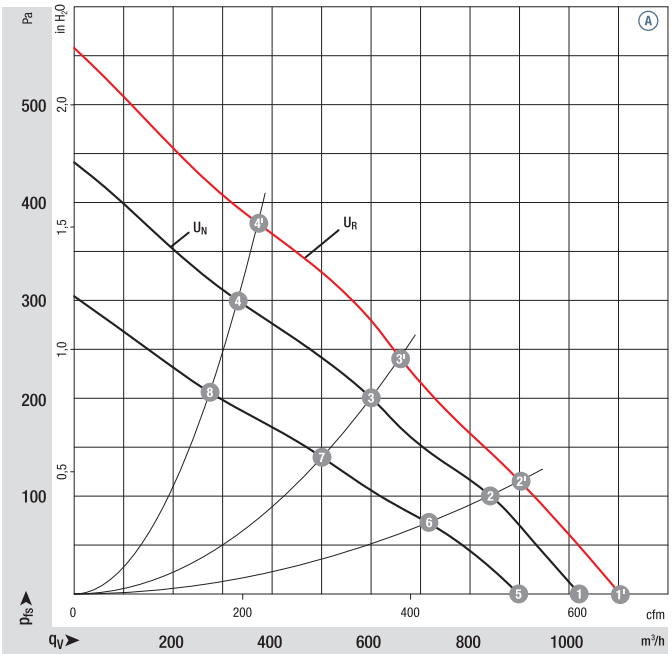


| | | n rpm⁻¹ | $P_{ed}$ W | $Lp_A$ dB(A) | $\eta_{tL}$ % |
|---|---|---|---|---|---|
| Ⓐ | 1' | 1700 | 145 | 65 | — |
| Ⓐ | 2' | 1930 | 133 | 62 | 38 |
| Ⓐ | 3' | 2290 | 122 | 59 | 41 |
| Ⓐ | 4' | 2700 | 99 | 61 | 32 |
| Ⓐ | 1 | 1580 | 118 | 64 | — |
| Ⓐ | 2 | 1790 | 107 | 61 | 38 |
| Ⓐ | 3 | 2100 | 95 | 57 | 41 |
| Ⓐ | 4 | 2410 | 73 | 58 | 32 |
| Ⓐ | 5 | 1400 | 78 | 60 | — |
| Ⓐ | 6 | 1580 | 70 | 56 | 38 |
| Ⓐ | 7 | 1760 | 56 | 53 | 41 |
| Ⓐ | 8 | 2000 | 44 | 53 | 32 |

Air performance measured according to: ISO 5801, Installation category A, with ebm-papst scroll housing without contact protection. Suction-side noise levels: $L_WA$ according to ISO 13347, $L_pA$ measured at 1 m distance from fan axis. The values given are applicable only under the specified measuring conditions and may differ depending on the installation conditions. In the event of deviation from the standard configuration, the parameters must be checked after installation! For detailed information see http://www.ebmpapst.com/general conditions



ebmpapst

- **Technical features:** See connection diagram p. 274
- **EMC (24 VDC):** Interference emission acc. to EN 55022, class B
  Immunity to interference acc. to EN 61000-6-2
- **Cable exit:** Variable
- **Protection class:** I
- **Conformity with standard(s):** EN 60950-1
- **Approvals:** UL, CSA

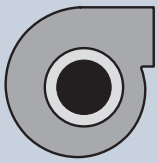

| Centrifugal blowers without flange | Weight centrifugal blowers kg |
|---|---|
| D1G 133-DC13 -52 | 3.4 |
| D1G 133-DC17 -52 | 3.4 |

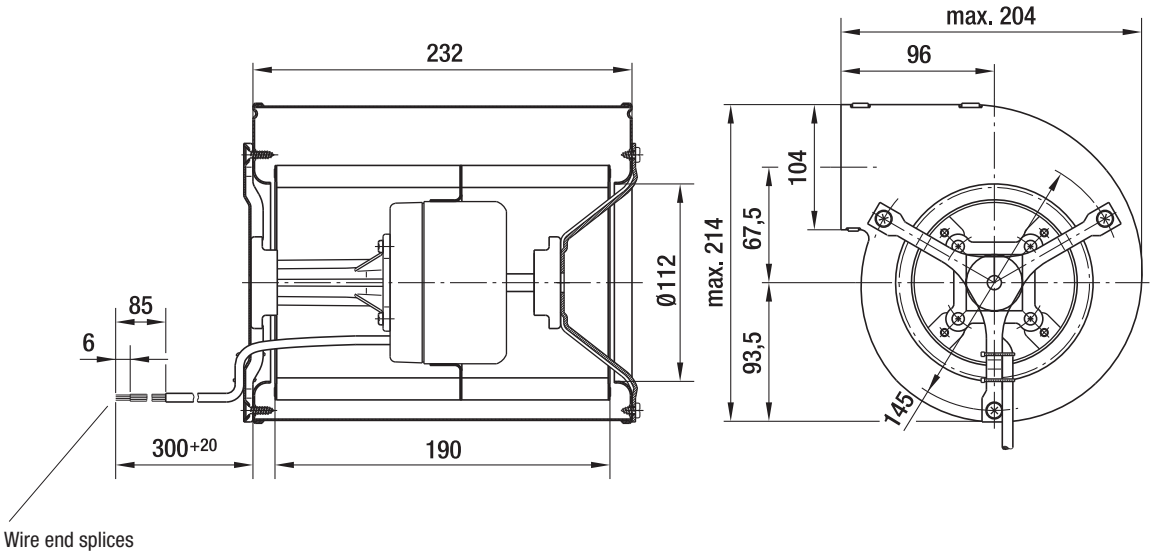

Max. 1000 m³/h

# DC centrifugal blowers

## Ø 146 mm



- **Material:** Housing: Galvanized sheet steel<br>Impeller: Galvanized sheet steel<br>Rotor: Painted black
- **Direction of rotation:** Clockwise, looking towards rotor
- **Degree of protection:** IP 42
- **Insulation class:** "B"
- **Installation position:** Any
- **Condensation drainage holes:** None
- **Mode of operation:** Continuous operation (S1)
- **Design:** SAL motor mounted with vibration damping on both sides
- **Bearings:** Maintenance-free ball bearings

VHD0146XUNES

**Nominal data**

| Type | Motor | Curve | Nominal voltage | Nominal voltage range | Air flow | Nominal speed | Power consumption | Input current | Sound pressure level | Min. back-pressure | Admissible amb. temp. | Technical features and connection diagram |
|---|---|---|---|---|---|---|---|---|---|---|---|---|
| | | | VDC | VDC | m³/h | rpm⁻¹ | W | A | dB(A) | Pa | °C | |
| **D1G 146** | M1G 074-CF | Ⓐ | 24 | 16-28 | 1000 | 1350 | 105 | 5.10 | 61 | 0 | -25...+60 | p. 274 / G) |
| **D1G 146** | M1G 074-CF | Ⓐ | 48 | 36-57 | 1000 | 1350 | 105 | 2.60 | 61 | 0 | -25...+60 | p. 274 / G) |

Subject to change

**Curves:**

$U_N$ = nominal voltage (24 V /48 V)

$U_R$ = over-voltage (28 V / 57 V)

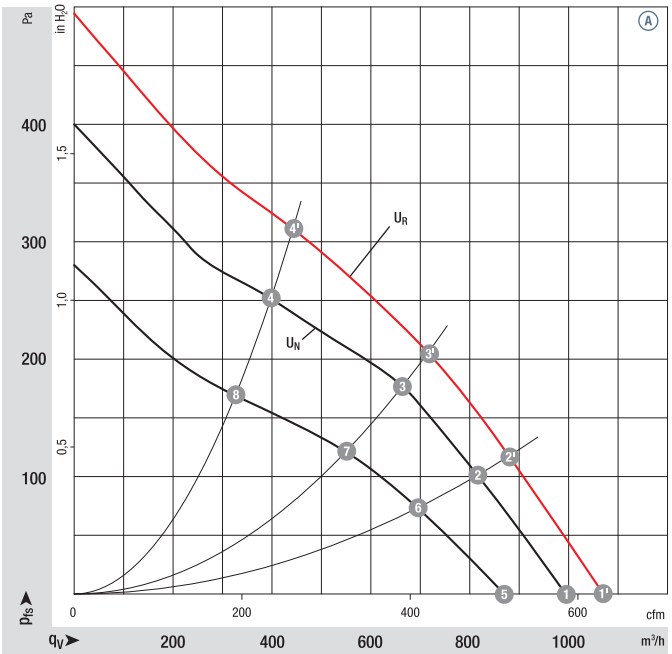


| | | n rpm⁻¹ | $P_{ed}$ W | $Lp_A$ dB(A) | $\eta_{tL}$ % |
|---|---|---|---|---|---|
| Ⓐ | 1' | 1460 | 129 | 63 | — |
| Ⓐ | 2' | 1680 | 119 | 60 | 53 |
| Ⓐ | 3' | 1890 | 111 | 58 | 61 |
| Ⓐ | 4' | 2240 | 95 | 59 | 55 |
| Ⓐ | 1 | 1350 | 105 | 61 | — |
| Ⓐ | 2 | 1570 | 95 | 58 | 53 |
| Ⓐ | 3 | 1750 | 88 | 56 | 61 |
| Ⓐ | 4 | 2010 | 70 | 57 | 55 |
| Ⓐ | 5 | 1210 | 70 | 56 | — |
| Ⓐ | 6 | 1360 | 60 | 54 | 53 |
| Ⓐ | 7 | 1460 | 53 | 52 | 61 |
| Ⓐ | 8 | 1670 | 42 | 51 | 55 |

Air performance measured according to: ISO 5801, Installation category A, with ebm-papst scroll housing without contact protection. Suction-side noise levels: $L_WA$ according to ISO 13347, $L_pA$ measured at 1 m distance from fan axis. The values given are applicable only under the specified measuring conditions and may differ depending on the installation conditions. In the event of deviation from the standard configuration, the parameters must be checked after installation! For detailed information see http://www.ebmpapst.com/general conditions

- **Technical features:** See connection diagram p. 274
- **EMC (24 VDC):** Interference emission acc. to EN 55022, class B
  Immunity to interference acc. to EN 61000-6-2
- **Cable exit:** Variable
- **Protection class:** I
- **Conformity with standard(s):** EN 60950-1
- **Approvals:** UL, CSA

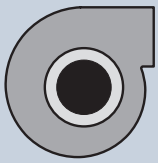

| Centrifugal blowers without flange | Weight centrifugal blowers kg |
|---|---|
| D1G 146-AA19 -52 | 3.5 |
| D1G 146-AA33 -52 | 3.5 |

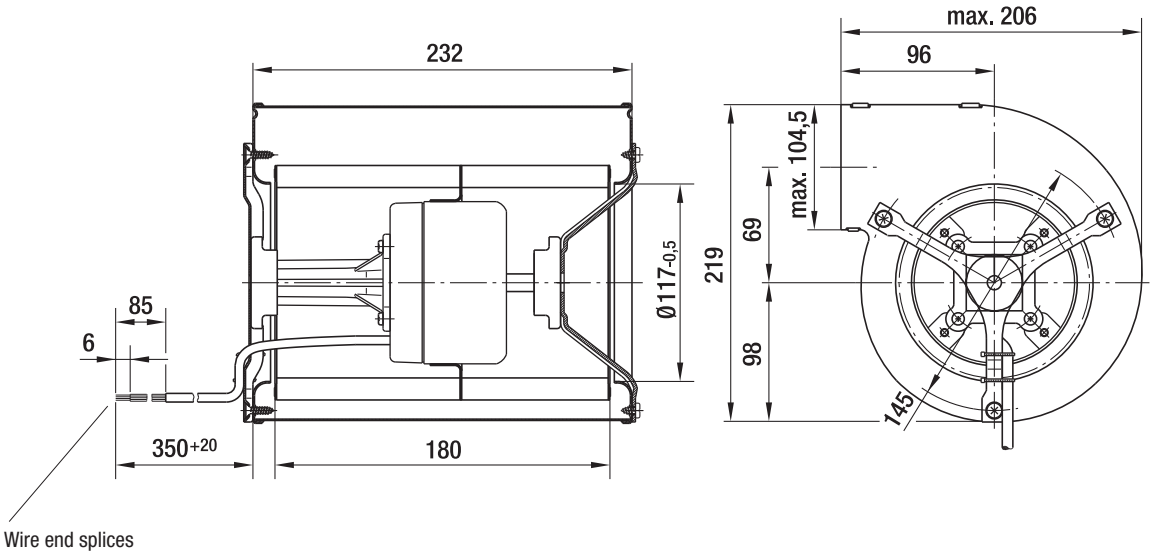

Max. 980 m³/h

# DC centrifugal blowers

## Ø 160 mm

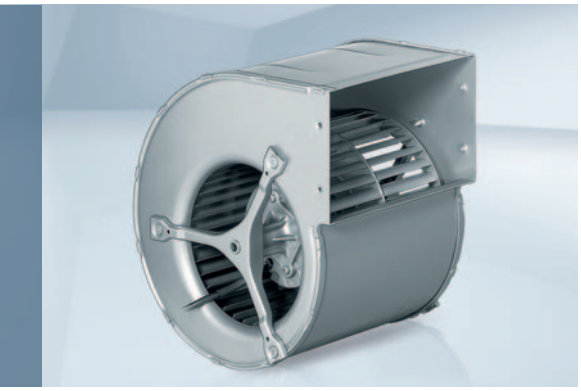

- **Material:** Housing: Galvanized sheet steel<br>Impeller: Galvanized sheet steel<br>Rotor: Painted black
- **Direction of rotation:** Counterclockwise, looking towards rotor
- **Degree of protection:** IP 42
- **Insulation class:** "B"
- **Installation position:** Any
- **Condensation drainage holes:** None
- **Mode of operation:** Continuous operation (S1)
- **Design:** SAL motor mounted with vibration damping on both sides
- **Bearings:** Maintenance-free ball bearings

VHD0160XUNES

**Nominal data**

| Type | Motor | Curve | Nominal voltage | Nominal voltage range | Air flow | Nominal speed | Power consumption | Input current | Sound pressure level | Min. back-pressure | Admissible amb. temp. | Technical features and connection diagram |
|---|---|---|---|---|---|---|---|---|---|---|---|---|
| | | | VDC | VDC | m³/h | rpm⁻¹ | W | A | dB(A) | Pa | °C | |
| **D1G 160** | M1G 074-CF | Ⓐ | 24 | 16-28 | 980 | 1250 | 112 | 5.60 | 60 | 0 | -25...+60 | p. 274 / G) |
| **D1G 160** | M1G 074-CF | Ⓐ | 48 | 36-57 | 980 | 1250 | 112 | 2.90 | 60 | 0 | -25...+60 | p. 274 / G) |

Subject to change

**Curves:**

$U_N$ = nominal voltage (24 V /48 V)

$U_R$ = over-voltage (28 V / 57 V)

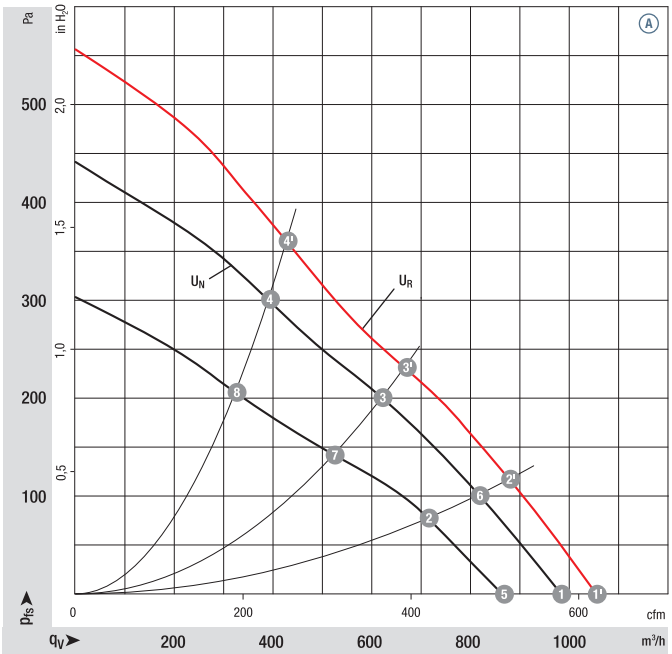


| | | n rpm⁻¹ | $P_{ed}$ W | $Lp_A$ dB(A) | $\eta_{tL}$ % |
|---|---|---|---|---|---|
| Ⓐ | 1' | 1330 | 142 | 63 | — |
| Ⓐ | 2' | 1520 | 128 | 61 | 64 |
| Ⓐ | 3' | 1790 | 115 | 59 | 66 |
| Ⓐ | 4' | 2090 | 105 | 60 | 60 |
| Ⓐ | 1 | 1250 | 112 | 60 | — |
| Ⓐ | 2 | 1420 | 102 | 59 | 64 |
| Ⓐ | 3 | 1660 | 92 | 58 | 66 |
| Ⓐ | 4 | 1900 | 80 | 58 | 60 |
| Ⓐ | 5 | 1100 | 75 | 58 | — |
| Ⓐ | 6 | 1250 | 69 | 56 | 64 |
| Ⓐ | 7 | 1420 | 58 | 54 | 66 |
| Ⓐ | 8 | 1580 | 47 | 53 | 60 |

Air performance measured according to: ISO 5801, Installation category A, with ebm-papst scroll housing without contact protection. Suction-side noise levels: $L_WA$ according to ISO 13347, $L_pA$ measured at 1 m distance from fan axis. The values given are applicable only under the specified measuring conditions and may differ depending on the installation conditions. In the event of deviation from the standard configuration, the parameters must be checked after installation! For detailed information see http://www.ebmpapst.com/general conditions



ebmpapst

- **Technical features:** See connection diagram p. 274
- **Cable exit:** Variable
- **Protection class:** I
- **Conformity with standard(s):** EN 60950-1
- **Approvals:** UL, CSA

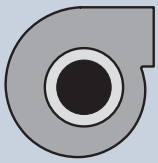

| Centrifugal blowers without flange | Weight centrifugal blowers kg |
|---|---|
| D1G 160-DA19 -52 | 3.6 |
| D1G 160-DA33 -52 | 3.6 |

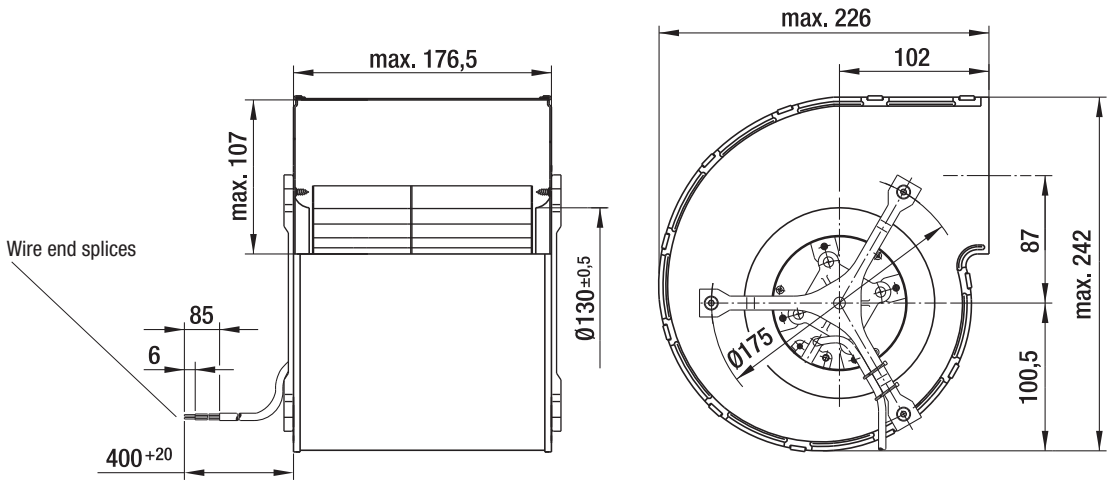



# DC fans - specials

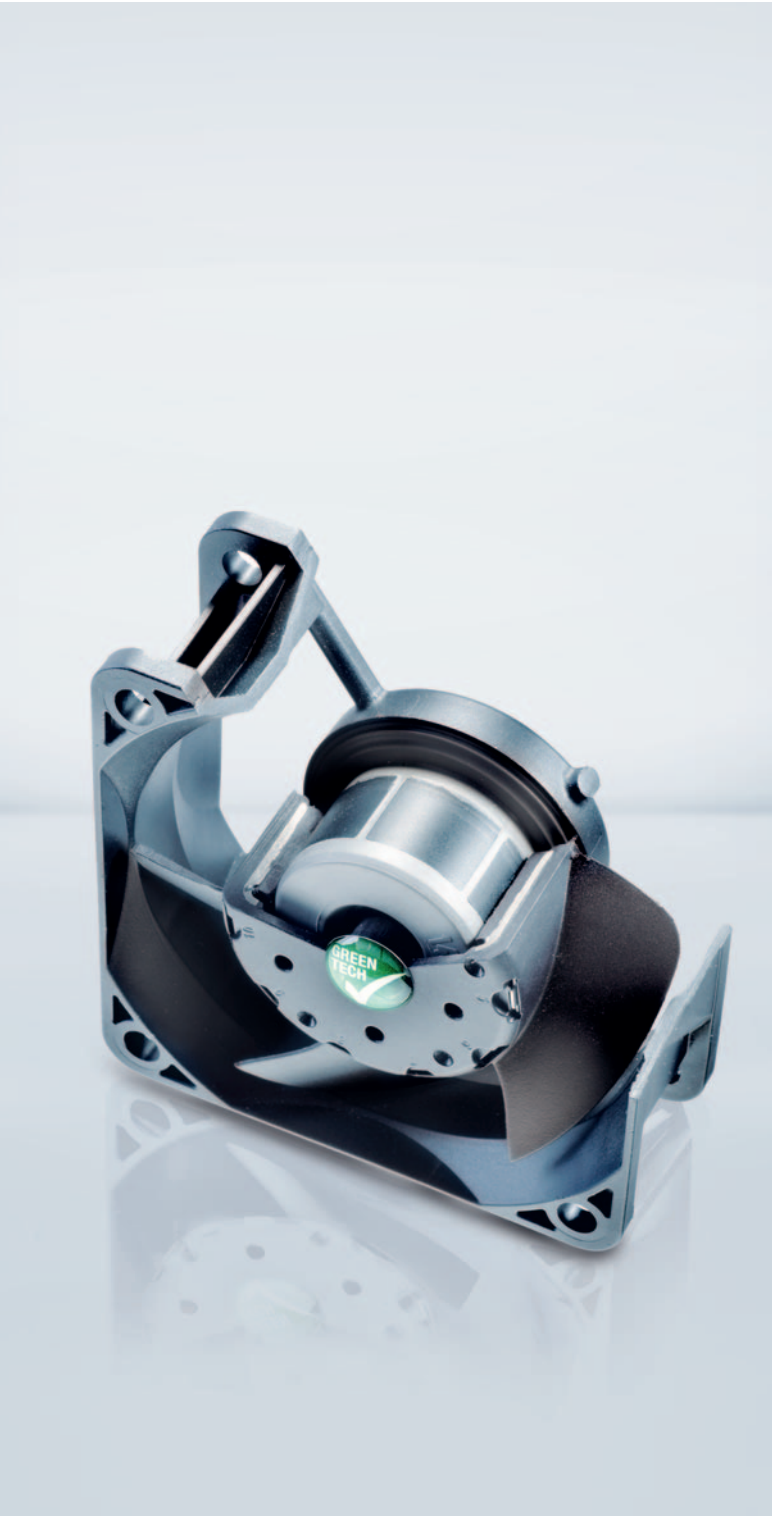



| | |
|---|---|
| Speed signal | **178** |
| Alarm signal | **180** |
| Speed setting / Control input | **184** |
| FanCheck | **187** |
| Protected fans, degree of protection: IP 54 / IP 68 | **188** |

# DC fans - specials

*Technical information*





**Cooling capacity and efficiency**
Greater power density, increasing miniaturization and extreme electronic component density are placing increased demands on the cooling capacity and efficiency of fans. Therefore, intelligent and space-saving integration of the fan in the device configuration is very important:

- Tailor-made cooling adapted to the situation as and when required.
- Programmable cooling by defining speed profiles.
- Transparency of function thanks to complete, interactive monitoring in all operating conditions.

Standard fans in electronics cooling have proven themselves a million times over.

With a constant speed and an appropriate sound level, they continuously provide the air flow required for extreme cases. But these extreme situations occur seldom – if at all – during operation. What is needed is an intelligent fan that adapts automatically to the level of cooling required at the time.

ebm-papst provides intelligent cooling concepts that are optimally adapted to practical requirements. For example:

**1. Speed adjustment via temperature sensor**
ebm-papst answers with a complete range of DC fans with temperature-controlled speed adjustment via a temperature sensor, available in a variety of standard dimensions.

Installation is very simple. Either an external temperature sensor in the form of an exposed wire that can be placed anywhere, or an internal sensor located directly in the fan hub in the air flow provides continuous and undissipated thermal information to the control electronics for speed adjustment. A range of temperature sensors can be found on page 184.

**2. DC fans with separate control input**
Open or closed-loop speed control is also possible with DC fans that have a separate control input. So a control voltage or a pulse-width modulated signal can be used to vary the speed. These options are used primarily in devices that have the appropriate standard interfaces and require varied fans depending on the load.

**3. Speed signal**
DC fans with speed signal.
The integrated "electronic tachometer" continuously provides an actual speed signal for external evaluation. A very simple signal evaluation on the customer side informs the user of the current fan speed at all times. The speed signal is provided by a separate wire.

**4. Alarm signal**
For applications that require monitored fan operation with an alarm signal, ebm-papst offers a number of alarm signals variants. Depending on the type of fan in question, the signal will either be static, already evaluated, or a continuous, interface-compatible, high or low signal. The alarm signal is provided by a separate wire.

**5. Turbo drives**
Fans with three-phase EC drives and microprocessor-controlled motor electronics. The torque of these three-phase motors, which is virtually independent of the rotor position, allows the fan to run very smoothly. The speed of these fans can be controlled over a very wide speed range by means of PWM, analog voltage, or temperature. Optionally, the fans can be supplied with reversible direction of rotation and active brake operation.

**6. Protection against environmental conditions**
Some applications place particular demands on the fans' resistance to environmental conditions, such as dust, moisture, water, and salt. ebm-papst offers solutions for adapting fans to these conditions.

# Speed signal /2

- Speed-proportional, square-wave signal for external monitoring of the fan motor speed
- 2, 3, or 6 pulses per revolution
- Open-collector signal output
- Extremely wide operating voltage range
- Easy adaptation to user interface
- Connection via separate cable
- The sensor signal also serves as a major comparison variable for setting and maintaining the setpoint speed for interactive or controlled cooling with one or more interconnected fans.

**Available on request:**
- Electrically isolated speed signal circuit
- Varying voltage potentials for power and logic circuit

**Electrical hookup**

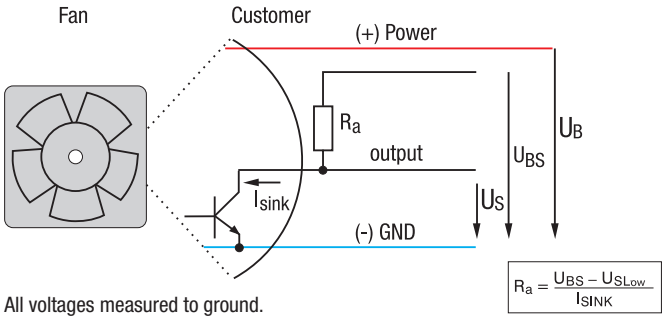


All voltages measured to ground.
External load resistor $R_a$ / $U_S$ / $U_{BS}$ required.

| Signal data | Speed signal $U_{S\ Low}$ | Condition: $I_{sink}$ | Speed signal $U_{S\ High}$ | Condition: $I_{source}$ | Admissible sink current $I_{sink\ max.}$ | Pulses per revolution* |
|---|---|---|---|---|---|---|
| **Type** | **VDC** | **mA** | **VDC** | **VDC** | **mA** | |
| 12 / 24 V | ≤ 0.4 | 2 | ≤ 30 | 30 | 4 | 2 |
| 48 V | ≤ 0.4 | 2 | ≤ 60 | 60 | 4 | 2 |

Subject to change

Standard value, can vary depending on fan series.
* Depending on the fan electronics other values are feasible e. g. 3 or 6.

# Speed signal /12

- Speed-proportional, square-wave signal for external monitoring of the fan motor speed
- 2, 3, or 6 pulses per revolution
- TTL-compatible
- Integrated pull-up resistor
- Connection via separate cable
- The sensor signal also serves as a major comparison variable for setting and maintaining the setpoint speed for interactive or controlled cooling with one or more interconnected fans.

**Available on request:**
- Electrically isolated speed signal circuit
- Varying voltage potentials for power and logic circuit

**Electrical hookup**

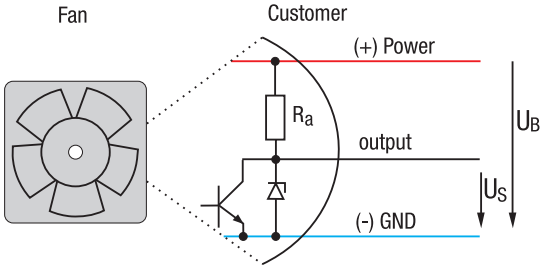


All voltages measured to ground.

| Signal data | Speed signal $U_{S\ Low}$ | Condition: $I_{sink}$ | Speed signal $U_{S\ High}$ | Condition: $I_{source}$ | Admissible sink current $I_{sink\ max.}$ | Pulses per revolution* |
|---|---|---|---|---|---|---|
| **Type** | **VDC** | **mA** | **VDC** | **mA** | **mA** | |
| 12 / 24 / 48 V | ≤ 0.4 | 1 | 2.5–5.5 | 1 | 1 | 2 |

Subject to change

Standard value, can vary depending on fan series.
* Depending on the fan electronics other values are feasible e. g. 3 or 6.



ebmpapst

**Signal output voltage**

Standard signal for all models (exceptions see below)

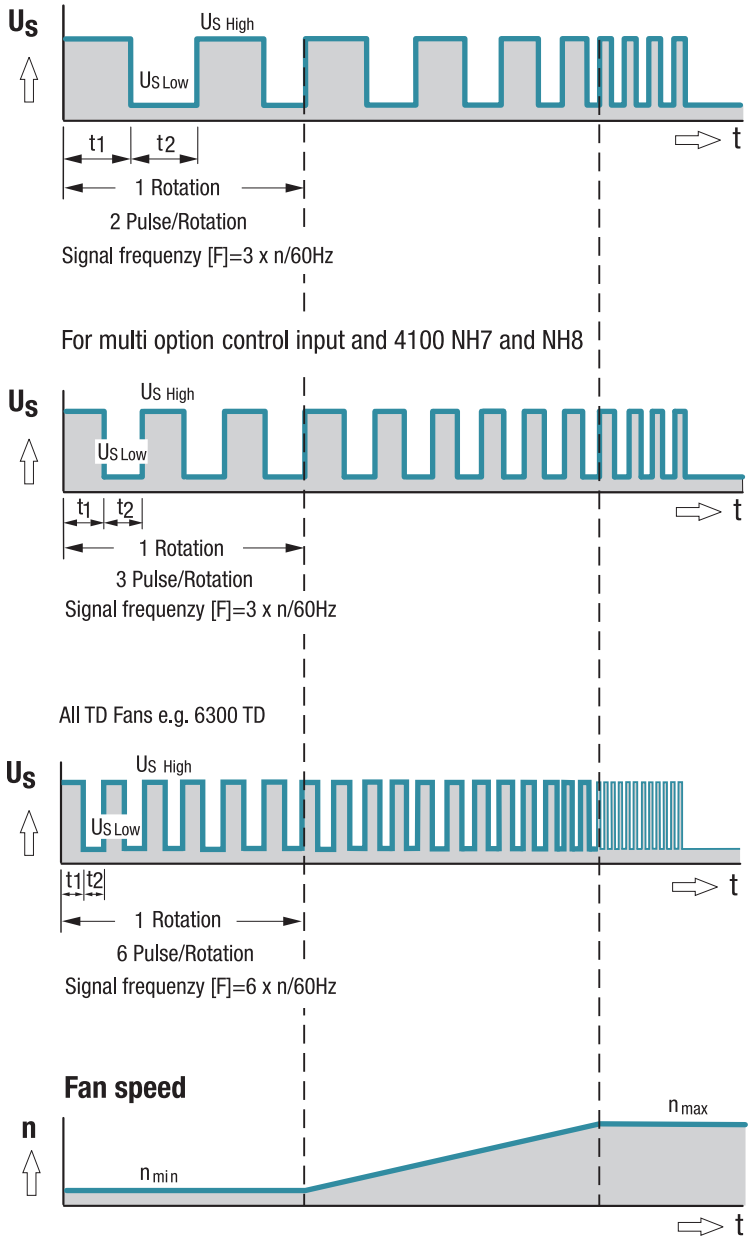


**Note:**
Fans that come with these fan specials could have variations with respect to the temperature range, voltage range, and power consumption compared to standard fans without specials.

# Alarm signal /17

## Speed limit

- Alarm signal for speed monitoring
- Signal output via open collector
- The fan emits a continuous high signal during trouble-free operation within the permissible voltage range.
- Low signal when speed limit is not reached
- After elimination of the fault, the fan returns to its setpoint speed; the alarm signal reverts to high.

**Available on request:**

- Integrated signal storage for subsequent recognition of short-term faults (latch).
- Alarm circuit open collector or TTL.
- Electrically isolated for maximum device safety; Defects in the power circuit do not affect the alarm circuit.

**Electrical hookup**

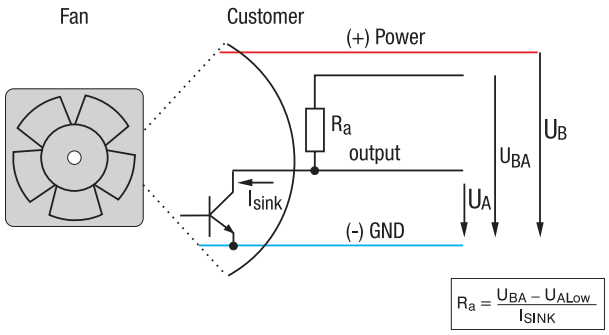


All voltages measured to ground.
External load resistor $R_a$ from $U_A$ to $U_{BA}$ required.

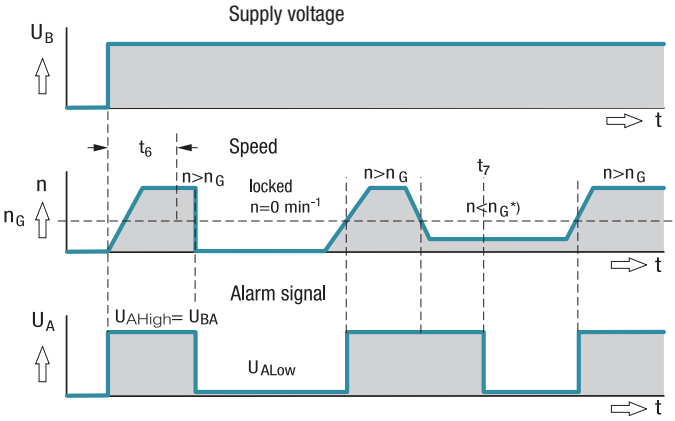


$t_6$ = Alarm signal suppression during startup
$t_7$ = Alarm delay time during run-up
* n < speed limit $n_G$ by braking or locking

# Alarm signal /19

## Speed limit

- Alarm signal for speed monitoring
- Signal output via open collector
- The fan emits a continuous low signal during trouble-free operation within the permissible voltage range.
- High signal when speed limit is not reached
- After elimination of the fault, the fan returns to its setpoint speed; the alarm signal reverts to low.

**Available on request:**

- Integrated signal storage for subsequent recognition of short-term faults (latch).
- Alarm circuit open collector or TTL.
- Electrically isolated for maximum device safety; Defects in the power circuit do not affect the alarm circuit.

**Electrical hookup**

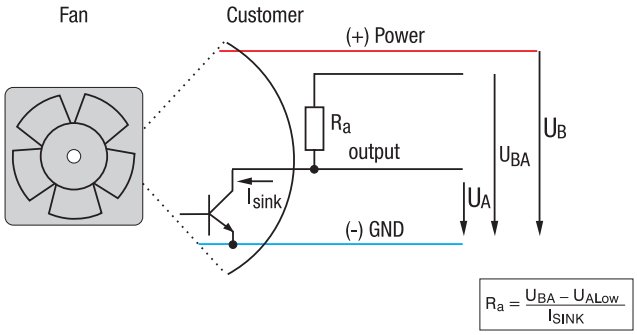


All voltages measured to ground.
External load resistor $R_a$ from $U_A$ to $U_{BA}$ required.

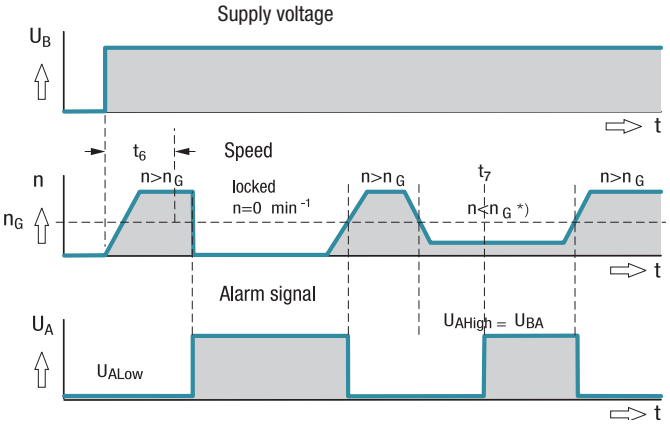


$t_6$ = Alarm signal suppression during startup
$t_7$ = Alarm delay time during run-up
* n < speed limit $n_G$ by braking or locking

**Note:**
Fans that come with these fan specials could have variations with respect to the temperature range, voltage range, and power consumption compared to standard fans without specials.

| Alarm signal data | Alarm output voltage $U_{A}$ Low | Condition: | Condition: $I_{sink}$ = | Alarm output voltage $U_{A}$ High | Condition: | Condition: $I_{source}$ | Alarm operating voltage $U_{BA}$ max. | Max. permissible sink current |
|---|---|---|---|---|---|---|---|---|
| **Type** | **VDC** | | **mA** | **VDC** | | **mA** | **VDC** | **mA** |
| 12 / 24 V | ≤ 0.4 | $n > n_G$ | 2 | ≤ 30 | $n < n_G$ | 0 | 30 | 10 |
| 48 V | ≤ 0.4 | $n > n_G$ | 2 | ≤ 60 | $n < n_G$ | 0 | 60 | 10 |
| Subject to change | Standard value, can vary depending on fan series. | | | | | | | |

**Selectable parameters:**
- Speed limit
- $t_6$ Alarm signal suppression during start-up
- $t_7$ Alarm delay time during run-up

For existing products, information about alarm signals is included in the product data sheet.

# Alarm signal /37

## Go / NoGo alarm

- Alarm signal for speed monitoring
- Signal output via open collector
- The fan emits a continuous high signal during trouble-free operation within the permissible voltage range.
- Low signal when speed limit is not reached
- After elimination of the fault, the fan returns to its setpoint speed; the alarm signal reverts to high.

**Available on request:**

- Alarm circuit TTL compatible.

**Electrical hookup**

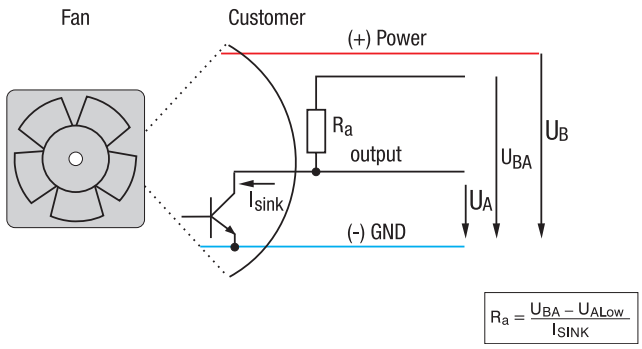


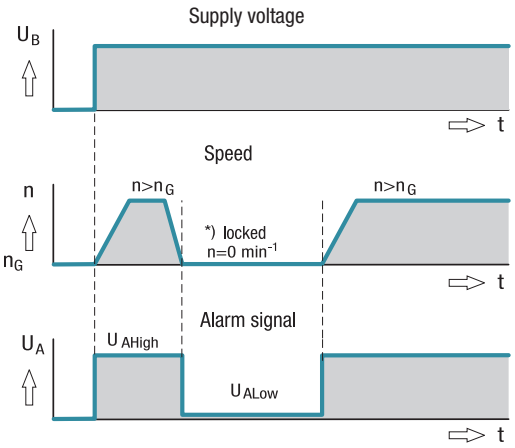


All voltages measured to ground
External load resistor $R_a$ from $U_A$ to $U_{BA}$ required.

* Speed limit $n_G$ = 0 rpm

# Alarm signal /39

## Go / NoGo alarm

- Alarm signal for speed monitoring
- Signal output via open collector
- The fan emits a continuous low signal during trouble-free operation within the permissible voltage range.
- High signal when speed limit is not reached
- After elimination of the fault, the fan returns to its setpoint speed; the alarm signal reverts to low.

**Electrical hookup**

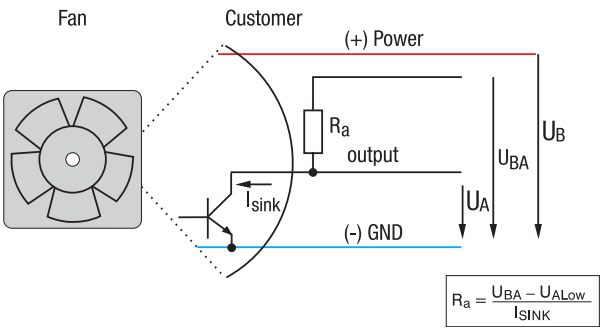


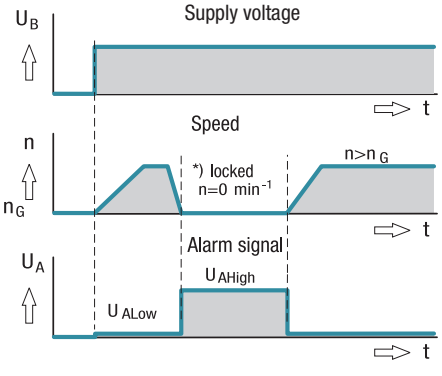


All voltages measured to ground
External load resistor $R_a$ from $U_A$ to $U_{BA}$ required.

* Speed limit $n_G$ = 0 rpm

**Note:**
Fans that come with these fan specials could have variations with respect to the temperature range, voltage range, and power consumption compared to standard fans without specials.

| Alarm signal data | Alarm output voltage $U_A$ Low | Condition: | Condition: $I_{sink}$ = | Alarm output voltage $U_A$ High | Condition: | Condition: $I_{source}$ | Alarm operating voltage $U_{BA}$ max. | Max. permissible sink current |
|---|---|---|---|---|---|---|---|---|
| **Type** | **VDC** | | **mA** | **VDC** | | **mA** | **VDC** | **mA** |
| 12 / 24 V | ≤ 0.4 | $n > n_G$ | 2 | ≤ 30 | $n < n_G$ | 0 | 30 | 10 |
| 48 V | ≤ 0.4 | $n > n_G$ | 2 | ≤ 60 | $n < n_G$ | 0 | 60 | 10 |
| Subject to change | Standard value, can vary depending on fan series. | | | | | | | |

For existing products, information about alarm signals is included in the product data sheet.

# Speed setting via temperature sensor

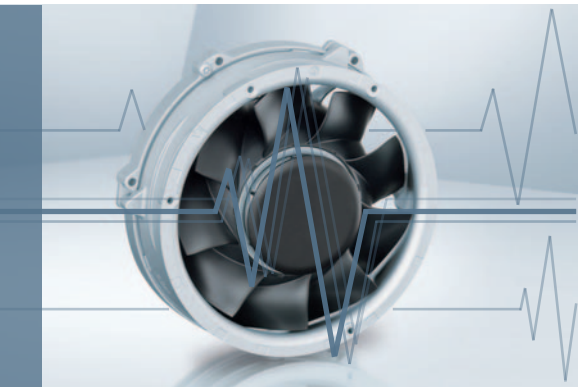

– The control variable is a temperature sensor that is either integrated in the fan or connected to an additional control cable.

**External temperature sensor type T**

– Ext. NTC resistor type LZ370 (p. 272) is required (not included in the standard scope of delivery)

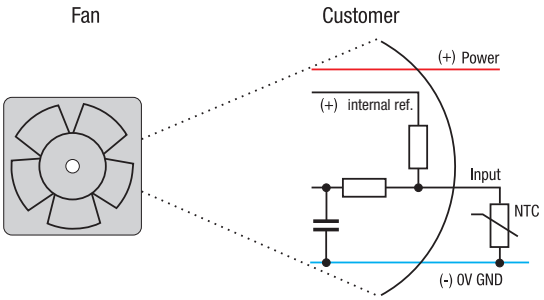


**Internal temperature sensor type I**

– NTC integrated in the fan hub

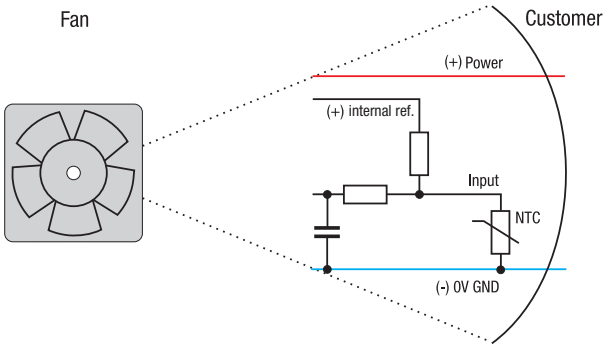


**Standard speed/temperature curve for type T and type I**

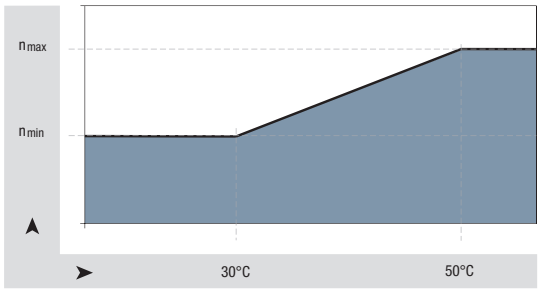


$n_{min} \approx {}^{1}/_{2}\, n_{max}$
$T_{min} \approx 30\ °C$; $T_{max} = 50\ °C$

**Optionally available with selectable temperature/speed curve**

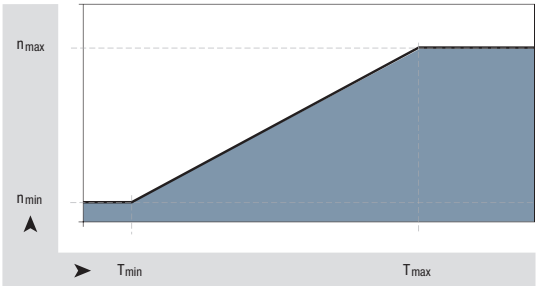


$n_{min} \approx 800\ {}^{1}/_{min}$ $n_{max}$ based on model
$T_{min} \approx 5\ °C$ $T_{max} \leq 85\ °C$, based on model

# Speed setting via control voltage or PWM signal

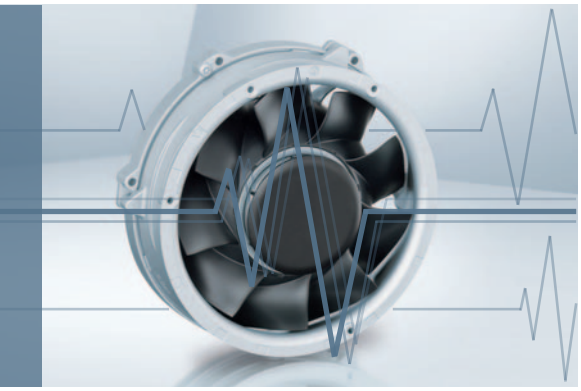

– The control variable is a PWM signal or analog control voltage.

**Speed setting via analog control voltage type A**

– Standard control range 0...10 V

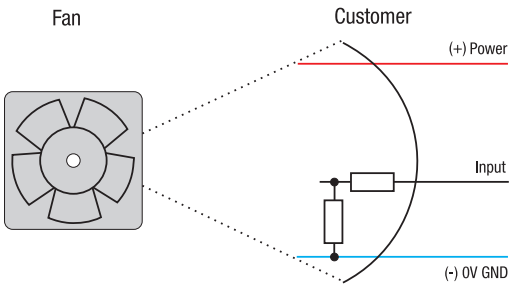


Typical input resistance > 10 k

**Speed setting via PWM type P**

– Standard PWM signal in two versions
  a) PWM frequency, mainly 1...10 kHz (0-100%), Open-collector input
  b) Four-wire interface according to Intel specifications for 12 VDC fans, PWM frequency 25 kHz, incl. speed signal /2

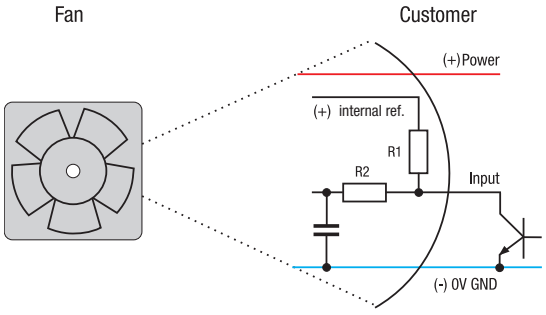


– Optional with potentiometer

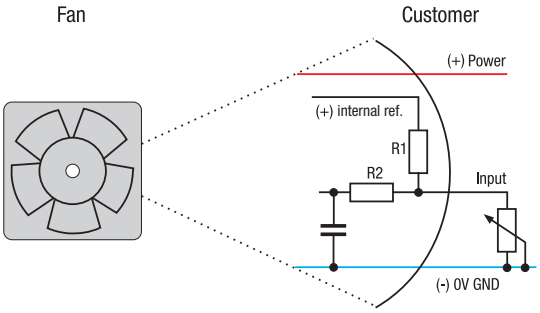


Internal reference = + 5 V
R1 typical 4.7...10 kΩ
R2 typical 100 kΩ

**Standard P / A curve**

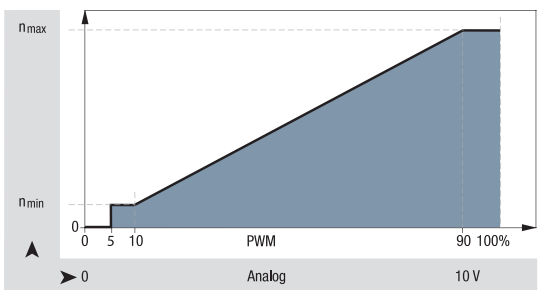


**Optionally available with selectable P / A speed curve**

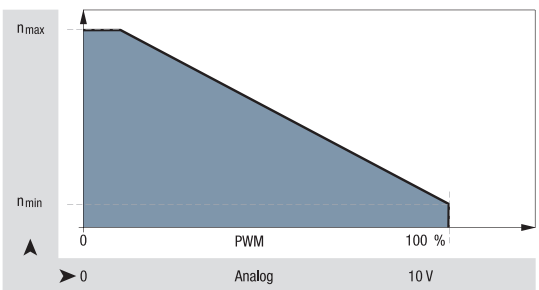

# Speed setting via multi-option control input

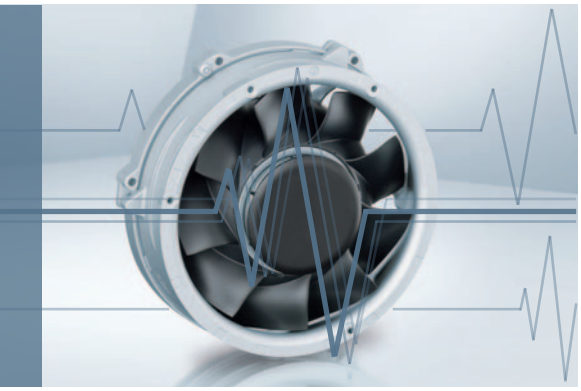

- Customer can operate input either with PWM signal, analog voltage, external temperature control module, or resistor.
- The control signal speed characteristics of the fan differ from the standard curve of the A and P inputs (see p. 185).
- To reach the maximum speed, the control cable must be connected to the $U_B$.
- The control input is usually combined with an open collector tachometer (type /2, see page 178).

**Speed setting via multi-option control input type 0**

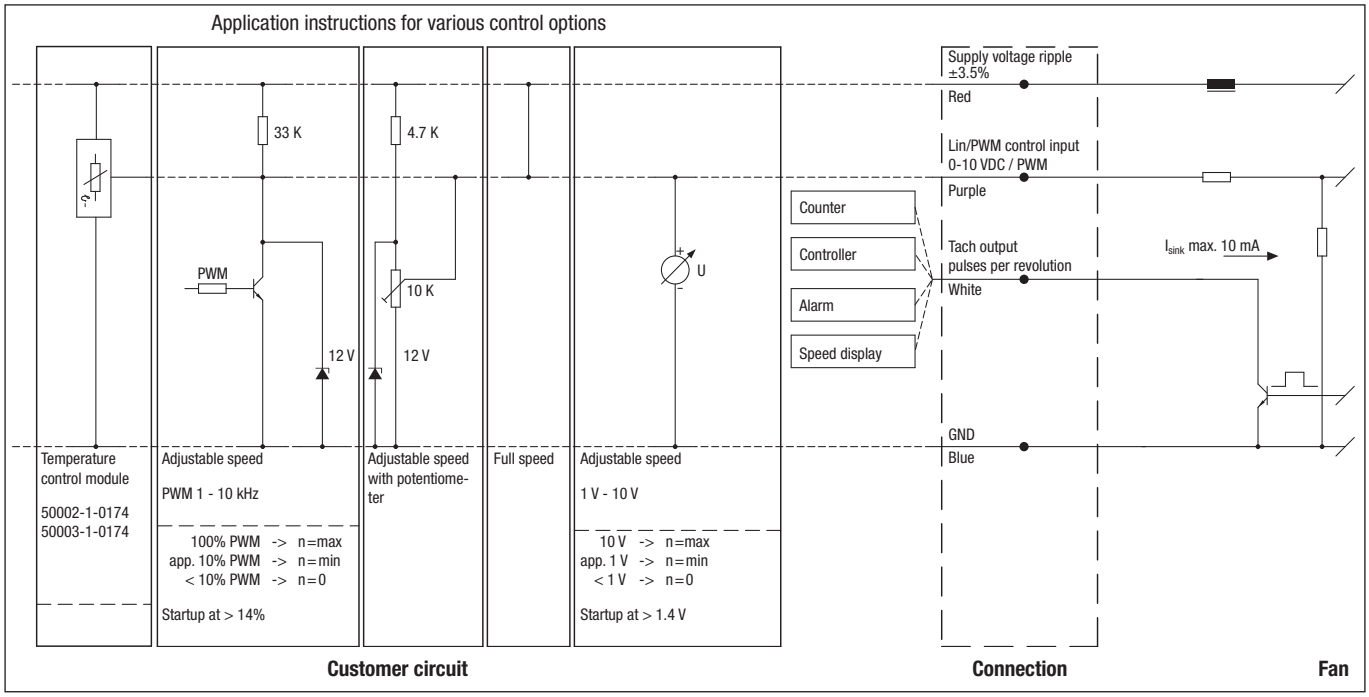


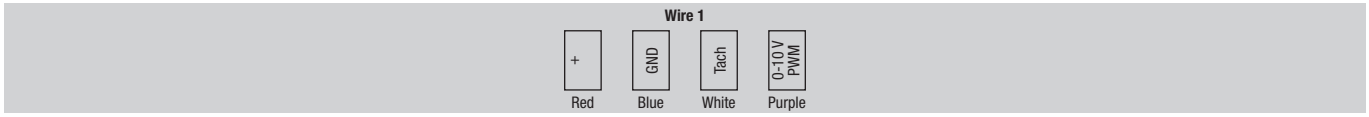


| Wire | Connection | Color | Assignment/function |
|---|---|---|---|
| 1 | + | Red | Supply voltage ripple ±3.5% |
| | GND | Blue | GND |

| Wire | Connection | Color | Assignment/function |
|---|---|---|---|
| 1 | Tach | White | Tach output: |
| | | | 3 Impulse/revolution |
| | 0-10 V / PWM | Purple | Control input (impedance 100 kV) |



ebmpapst

# FanCheck



- **Material:** Housing: Die-cast aluminum
  Impeller: GRP[1] (PA)
- **Direction of air flow:** Exhaust over struts
- **Direction of rotation:** Counterclockwise, looking towards rotor
- **Connection:** (+) and GND: AWG 22,
  Speed signal and control input: AWG 24
  all wires: UL 1007, TR 64
- **Highlights:** FanCheck
  PWM control input
- **Weight:** 755 g

- **Possible special versions:**
  (See chapter DC fans - specials)
  - Alarm with speed limit
  - External temperature sensor
  - Internal temperature sensor
  - Analog control input
  - Multi-option control input
  - Moisture protection
  - Salt spray protection
  - Degree of protection: IP 54 / IP 68

1) Fiberglass-reinforced plastic

Series 6300 N
FanCheck

| Nominal data | Air flow | Air flow | Nominal voltage | Voltage range | Sound pressure level | Sound power level | Sintec sleeve bearings / Ball bearings | Power consumption | Nominal speed | Temperature range | Service life L10 (40 °C) ebm-papst standard / Service life L10 (Tmax) ebm-papst standard | Life expectancy $L_{10IPC}$ (40 °C) s. P. 15 |
|---|---|---|---|---|---|---|---|---|---|---|---|---|
| **Type** | **m³/h** | **cfm** | **VDC** | **VDC** | **dB(A)** | **Bel(A)** | □/■ | **Watts** | **rpm** | **°C** | **Hours** | **Hours** |
| 6318 N/2 H3P-305 | 675 | 397 | **48** | 36…60 | - | 7.5 | ■ | 58 | 5 000 | -20…+70 | 77 500 / 40 000 | 130 000 |

Subject to change

**FanCheck** is a diagnostic tool integrated into the fan electronics for determining the remaining service life of the fan, dependant, upon temperature, speed, and preset environmental parameters. The FanCheck system emits a pulse width modulated signal, which reflects the remaining service life of the fan. The pulse width is proportional to the remaining service life of the fan. The FanCheck signal has a pulse width of 10 % at the end of the service life and a pulse width of 90 % with full service life. Basic data, such as the ball bearing system, bearing lubrication or lubricant used, are programmed in advance as parameters into the software. The customer defines the environmental conditions, such as the use of fans in moist, dusty, or dirty environments; other parameters such as ambient temperature and speed are determined continuously. Based on all the influencing parameters, the software can, by means of a complex algorithm, calculate the remaining service life for each individual fan.
To be able to better demonstrate function, the FanCheck system possesses a demo function for samples, in which the service life expires much more quickly than in real time. Using the alarm signal, tacho signal or an additional lead, the remaining service life can be retrieved and analyzed. Depending on the selected feature, the remaining service life can be emitted in the form of a PWM or an analog signal. In this way, optimum benefit is gained from the individual service life of each fan; thus, a fan exchange that is too early or too late can be avoided.

**Functionality**

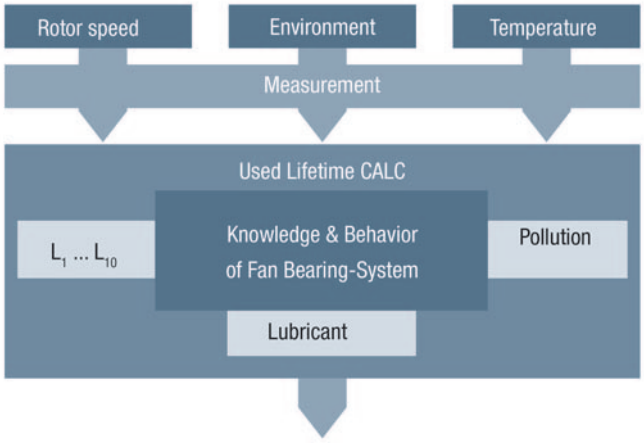


End of Life Indication
Output via alarm, PWM, analog or digital signal

# Protected fans

## against environmental conditions

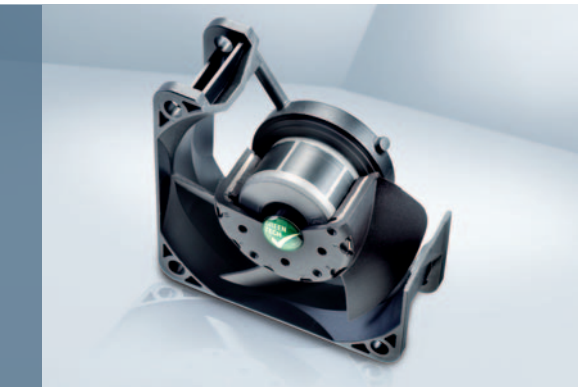

- Capable of satisfying special requirements for a broad range of applications
- Resistance of fans to environmental conditions such as dust, splashing water, humidity, spray water, and salt spray.
- Competent solutions to adapt fans to environmental conditions.

**Moisture protection**
A coat of paint over the motor and circuit board protect the fans against spray water and condensation.

**Degree of protection IP 54 / IP 68***
In the degree of protection IP 54, the motor and circuit boards are coated and therefore protected against spray water and moisture.
The degree of protection IP 68 is important for ebm-papst products, as it ensures a high degree of protection for the encapsulated motor and electronics against foreign bodies and water, while protecting the user against potential hazards upon contact. Degrees of protection higher than IP 68 are possible on request.

**Salt spray protection**
Salt spray represents one of the most difficult requirements for product durability. ebm-papst has the technology to protect fans and blowers from salt spray reliably and for the long term.

**Stainless steel bearings**
Special bearings made of stainless steel provide additional protection.

Solutions that are available and are used may differ depending on the fan size.
We would be glad to develop solutions tailored to the demands of your application.

| Degree of protection – IP code* | | | |
|---|---|---|---|
| | Protection against foreign bodies and accidental contact (first digit) | | Water protection (second digit) |
| X | No protection | X | No protection |
| 1 | Protection against foreign objects > 50 mm (back of the hand) | 1 | Protection against dripping water or condensation |
| 2 | Protection against foreign objects > 12 mm (finger) | 2 | Protection against dripping water, fans tilted 15° from vertical |
| 3 | Protection against foreign objects > 2.5 mm (tool) | 3 | Protection against sprayed water up to 60° from vertical |
| 4 | Protection against foreign objects > 1 mm (wire) | 4 | Protection against sprayed water from all sides |
| 5 | Protection against dust in harmful quantities | 5 | Protection against low-pressure water jets |
| 6 | Dust-proof | 6 | Protection against high-pressure water jets |
| | | 7 | Protection against temporary submersion (15 cm - 1 m) |
| | | 8 | Protection against continuous submersion |

* IP = International degree of protection marking
For AC- and EC-fans max. IP 65 available



# ACmaxx / EC axial fans




| | |
|---|---|
| Technical information about ACmaxx | **192** |
| Overview | **195** |
| ACmaxx axial fans | **196** |
| GreenTech EC tubeaxial fans | **200** |
| Energy-saving axial fans | **204** |
| EC axial fans | **206** |
| ACmaxx in-line duct fans | **210** |

# ACmaxx / EC axial fans

*Technical information*
*about ACmaxx / GreenTech EC tubeaxial fans*

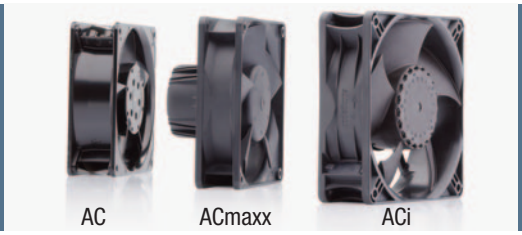


**Progress made by ebm-papst**
The best example: The ACmaxx fans from ebm-papst that offer substantial benefits thanks to an ingenious yet simple improvement over conventional AC fans.
The aim in developing the ACmaxx series was to raise the technical standard of the conventional AC fan significantly and in the process facilitate a transition to new technology by maintaining the same fan sizes. In short, to make sure that the fans can be replaced 1:1 without any changes to the peripherals or voltage situation.
ebm-papst offers two generations of ACmaxx products that meet different needs.

**What the ACmaxx and GreenTech EC compact fans have in common:**
**Energy efficiency**
A drive concept based on state-of-the-art GreenTech EC technology with outstanding motor efficiency. Compared to AC fans of the same size, ACmaxx energy consumption is up to 77 % lower – for greater cooling capacity! The energy savings alone means that the products pay for themselves after only a few months. The savings over the entire service life, especially in systems with multiple fans, is considerable.

**Independent of the power frequency and line voltage**
The ACmaxx and GreenTech EC tubeaxial fans are prepared for direct connection to a wide range of AC voltages and frequencies. The speed, and thus important properties of the fan such as air flow and noise, are independent of the power frequency and do not change, even within the defined voltage range. Voltage fluctuations in the power system are automatically compensated for.

**Long service life**
The efficiency of ACmaxx and GreenTech EC tubeaxial fan motors is up to 75 % greater than that of conventional AC fan variants. This not only saves energy, it also means less self-heating of the motor. Especially the bearing system responds positively to the low self-heating. The reason why the fans have a service life that is up to 85 % longer! This also extends the service and maintenance intervals significantly. Investments in replacement fans and every more expensive downtime are manageably small.

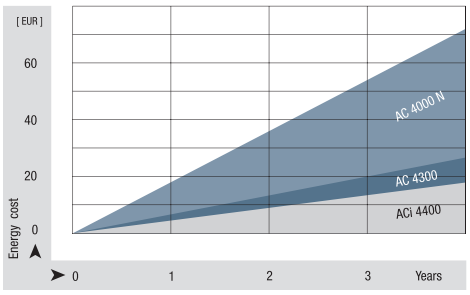


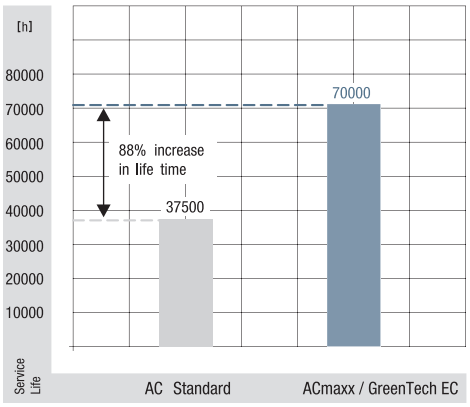

# ACmaxx / EC axial fans

*Technical information*
*about ACmaxx / GreenTech EC tubeaxial fans*

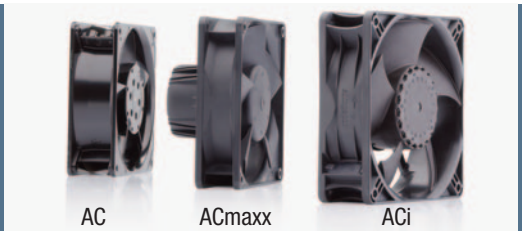


**Safety**

- Safety certifications: UL, CSA and VDE 0805 / EN60950. VDE 0700 / EN60335 on request.
- Our fans have the CE mark of conformity.
- EMC protection:
  > EN61000-4-4 Level 1 (1 kV or 2 kV) B
  > EN61000-4-2 Level 8 kV/15 kV or 4 kV/8 kV
  > EN61000-4-3
  > EN61000-4-6
  > EN61000-4-8
  > EN55022 Class B

**The environment**

AC fans are extremely common and are used in a wide variety of applications. In control cabinet cooling, beer coolers, cooling cabinets, wood-burning stoves, medical devices – all have different requirements for resistance to environmental conditions. ACmaxx and GreenTech EC tubeaxial fans offer the same features for moisture protection, splash water, and tougher environmental conditions.

**Particular design features of the GreenTech EC tubeaxial fan (ACi 4400): GreenTech EC compact fan is more compact!**

As large as existing AC fans – and not a bit larger. This is the greatest feature of the ACi 4400 GreenTech EC tubeaxial fans. Even in the hub area, the fan does not differ from typical 119 x 119 x 38 mm AC fans. Out with the AC, in with the ACi 4400 GreenTech EC tubeaxial fans – it's that simple.

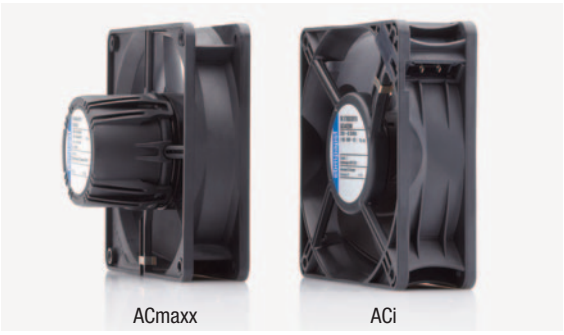


**The GreenTech EC tubeaxial fan is more efficient!**

ACmaxx saves energy, and the GreenTech EC tubeaxial fan generation saves even more. While an AC fan at 50 Hz can barely reach an overall efficiency of 5-6 %, the ACmaxx makes it to about 20-25 %. With the new ACi 4400 GreenTech EC tubeaxial fans, a remarkable level of up to 30 % is reached. This is the result of the optimization of the entire package made up of the drive, electronics, AC/DC conversion, and aerodynamics. Thus the new GreenTech EC tubeaxial fan series boasts energy savings of almost 75 % compared to the corresponding AC fan, thus providing significantly greater savings than the 40 % level of the old AC 4300 generation.

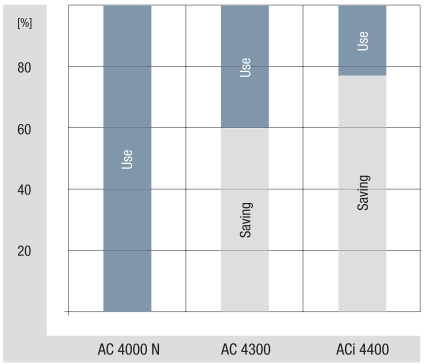


**The GreenTech EC tubeaxial fan is quieter!**

The ACi 4400 GreenTech EC tubeaxial fan is quieter! Quieter than AC fans and quieter than the existing ACmaxx generation. The reason for this is the optimized aerodynamics and the drive, which is optimized for minimum structure-borne noise. Thus the fan is only half as loud at a comparable air performance, and is up to 6 dB(A) quieter at some operating points.

**Speed independent of voltage and frequency**

For the ACi 4400 GreenTech EC tubeaxial fans, the speed, and thus the flow quantity and operating noise, are independent of the power supply and power frequency.

Versions are available for 115 VAC with a voltage range from 85 to 132 VAC and 230 VAC with a voltage range of 195 to 265 VAC. Operation with DC voltage is also possible. Voltage fluctuations and frequency differences in the power system are compensated for automatically.

# ACmaxx / EC axial fans

*Technical information*
*about ACmaxx / GreenTech EC tubeaxial fans*

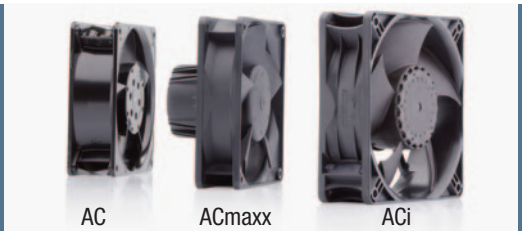


**Particular design features of the ACmaxx:**

**Prepared for all common AC voltages**
These models have a very wide voltage range from 85 to 265 VAC – the global voltage range, so to speak. This allows the fan to be used around the world, opening up large savings potentials. In addition to reduced logistics effort and stock keeping, worldwide availability is key. ACmaxx is compatible with every power supply and no switching is needed. From 85 to 265 volts and power frequencies of 50 and 60 Hz. Voltage fluctuations in the power system are automatically compensated for.

**Higher performance**
Unlike conventional AC technology, the state-of-the-art drive concept of this fan series is not linked to a fixed power frequency. This allows the motor speed to be increased over a wide range. Thus ACmaxx provides significantly greater air flow and significantly increased pressure.

**Greater flexibility**
The flexibility of ACmaxx is unique. With its intelligent features, ACmaxx can be adapted individually to the specific application:  standby mode, overload mode at peak times, or night reduction all the way to temperature-controlled quiet operation are all possible. From speed monitoring to long-term function checks using an alarm or speed signal outputs, ACmaxx offers optional interfaces that allow you to monitor an operation easily and quickly.

You can find further information about these fan options in the "Fans specials" chapter, starting on page 175.
Or you can simply contact our application engineers to discuss your ideal ACmaxx or GreenTech EC tubeaxial fan.

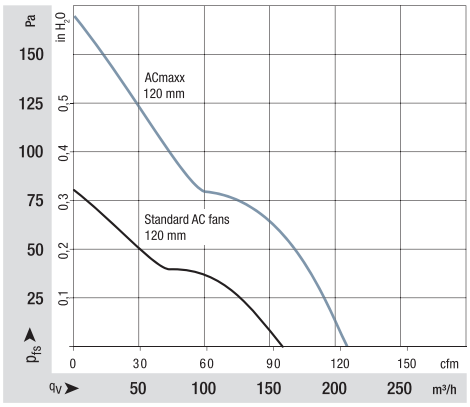




# Fans for AC operation

## Overview of air performance

| Dimensions | Series | Air flow | Page |
|---|---|---|---|
| mm | | m³/h | |
| □ 80 x 32 | AC 8300 | 80 | 196 |
| □ 92 x 38 | AC 3200 J | 144 | 197 |
| □ 119 x 25 | AC 4400 FN | 205 | 198 |
| □ 119 x 32 | AC 4300 | 204 | 199 |
| □ 119 x 38 | ACi 4400 N | 78...175 | 200 |
| □ 119 x 38 | ACi 4400 | 100...175 | 201 |
| Ø 172 x 51 | AC 6200 N | 350 | 202 |
| Ø 130 | W1G 130 | 220...370 | 204 |
| Ø 200 | W3G 200 | 560...1065 | 206 |
| Ø 250 | W3G 250 | 900...1910 | 208 |
| Ø 98,5 x 130 | AC 100 | 40...135 | 210 |

Subject to change

## Overview of technically feasible designs

| Dimensions | Series | VDE, UL, CSA | SINTEC sleeve bearings / ball bearings | Speed signal | Go / NoGo alarm | Alarm with speed limit | External temperature sensor | Internal temperature sensor | PWM control input | Analog control input | Multi-options control input | Moisture protection | IP 65 | Salt spray protection | Page |
|---|---|---|---|---|---|---|---|---|---|---|---|---|---|---|---|
| **ACmaxx / ACi axial fans** | | | | | | | | | | | | | | | |
| mm | Series | | | OPTIONAL | | | | | | | | | | | P. |
| □ 80 x 32 | AC 8300 | yes | ■ | • | • | • | • | • | • | • | – | • | • | • | 196 |
| □ 92 x 38 | AC 3200 J | no | ■ | • | • | • | • | • | • | • | – | • | • | • | 197 |
| □ 119 x 25 | AC 4400 FN | yes | ■ | • | • | • | • | • | • | • | – | • | – | – | 198 |
| □ 119 x 32 | AC 4300 | yes | ■ | • | • | • | • | • | • | • | – | • | • | • | 199 |
| □ 119 x 38 | ACi 4400 N | yes | ■ | – | – | – | – | – | – | – | – | • | • | • | 200 |
| □ 119 x 38 | ACi 4400 | yes | ■ | • | • | • | – | • | • | • | – | • | • | • | 201 |
| Ø 172 x 51 | AC 6200 N | yes | ■ | • | • | • | • | • | • | • | – | • | • | • | 202 |
| Ø 98.5 x 130 | AC 100 | * | ■ | – | – | – | – | – | – | – | – | • | – | – | 210 |

Subject to change

– Not yet available
• Available
▫ Sleeve bearings
■ Ball bearings

* Partially granted, partially in registration stage.

Please note that these special versions are not possible for all voltages and speeds, and not in all combinations.
The special versions are designed for specific customers and projects.
As a rule they are not available off the shelf and are tied to minimum volumes.
Please consult your customer support representative about the feasibility of your special variant.

Max. 80 m³/h

# ACmaxx axial fans

☐ 80 x 32 mm



- **Material:** Housing: GRP[1)] (PBTP)
  Impeller: GRP[1)] (PA)
- **Direction of air flow:** Exhaust over struts
- **Direction of rotation:** Clockwise, looking towards rotor
- **Connection:** Via single wires AWG 22, TR 64
- **Highlights:** Universally usable for all power voltages between 85 and 265 VAC
- **Weight:** 325 g

- **Possible special versions:**
  (See chapter DC fans - specials)
  - Speed signal
  - Go / NoGo alarm
  - Alarm with speed limit
  - External temperature sensor
  - Internal temperature sensor
  - PWM control input
  - Analog control input
  - Moisture protection
  - Salt spray protection
  - Degree of protection: IP 65

1) Fiberglass-reinforced plastic

Series AC 8300
VWC0080ASJAS

**Nominal data**

| Type | Air flow m³/h | Air flow cfm | Nominal voltage VAC | Frequency Hz | Voltage range VAC | Sound pressure level dB(A) | Sound power level Bel(A) | Sintec sleeve bearings / Ball bearings □ / ■ | Power consumption Watts | Nominal speed rpm⁻¹ | Temperature range °C | Service life $L_{10}$ (40 °C) ebm-papst standard Hours | Service life $L_{10}$ ($T_{max}$) ebm-papst standard Hours | Life expectancy $L_{10}$IPC (40 °C) see page 15 Hours | Curve |
|---|---|---|---|---|---|---|---|---|---|---|---|---|---|---|---|
| AC 8300 H | 80 | 47 | **100...240** | **50 / 60** | 85...265 | 48 | 6.2 | ■ | 8.3 | 5 000 | -20...+75 | 55 000 / 20 000 | | 92 500 | ① |

Subject to change

Speed variants available on request.

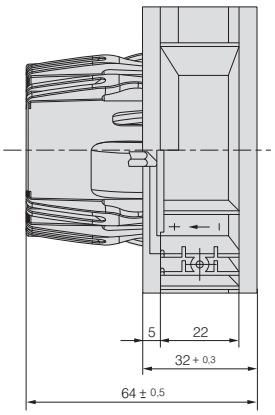


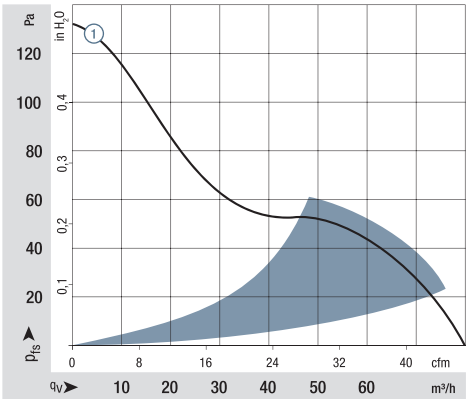


Air performance measured according to: ISO 5801.
Installation category A, without contact protection.
Noise: Total sound power level $L_{WA}$ ISO 10302 measured on a hemisphere with a radius of 2 m.
Sound pressure level $L_{pA}$ measured at 1 m distance from fan axis.
The values given are applicable only under the specified measuring conditions and may differ depending on the installation conditions.
In the event of deviation from the standard configuration, the parameters must be checked after installation!
For detailed information see
http://www.ebmpapst.com/general conditions

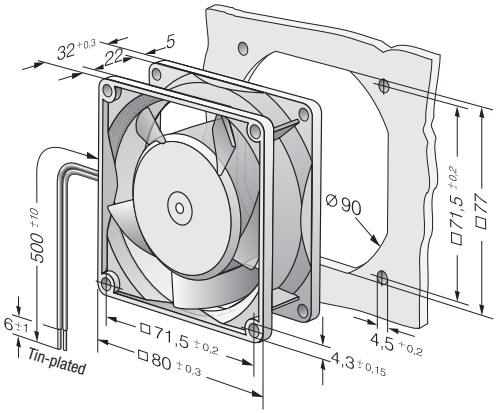

Max. 144 m³/h

# ACmaxx axial fans

☐ 92 x 38 mm



- **Material:** Housing: GRP[1] (PBTP)
  Impeller: GRP[1] (PA)
- **Direction of air flow:** Exhaust over struts
- **Direction of rotation:** Clockwise, looking towards rotor
- **Connection:** Via single wires AWG 22, TR 64
- **Highlights:** Universally usable for all power voltages between 85 and 265 VAC
- **Weight:** 325 g

- **Possible special versions:**
  (See chapter DC fans - specials)
  - Speed signal
  - Go / NoGo alarm
  - Alarm with speed limit
  - External temperature sensor
  - Internal temperature sensor
  - PWM control input
  - Analog control input
  - Moisture protection
  - Salt spray protection
  - Degree of protection: IP 65

1) Fiberglass-reinforced plastic

Series AC 3200 J
VWC0092JSGBS

**Nominal data**

| Type | Air flow m³/h | Air flow cfm | Nominal voltage VAC | Frequency Hz | Voltage range VAC | Sound pressure level dB(A) | Sound power level Bel(A) | Sintec sleeve bearings / Ball bearings □ / ■ | Power consumption Watts | Nominal speed rpm⁻¹ | Temperature range °C | Service life $L_{10}$ (40 °C) ebm-papst standard Hours | Service life $L_{10}$ ($T_{max}$) ebm-papst standard Hours | Life expectancy $L_{10}$IPC (40 °C) see page 15 Hours | Curve |
|---|---|---|---|---|---|---|---|---|---|---|---|---|---|---|---|
| AC 3200 JLU | 70 | 41 | **100...240** | **50 / 60** | 85...265 | 36 | 4.6 | ■ | 2.6 | 3 360 | -20...+70 | 70 000 / 35 000 | | 117 500 | ① |
| AC 3200 JH | 144 | 85 | **100...240** | **50 / 60** | 85...265 | 55 | 6.4 | ■ | 12 | 6 800 | -20...+70 | 70 000 / 35 000 | | 117 500 | ② |

Subject to change

Speed variants available on request.

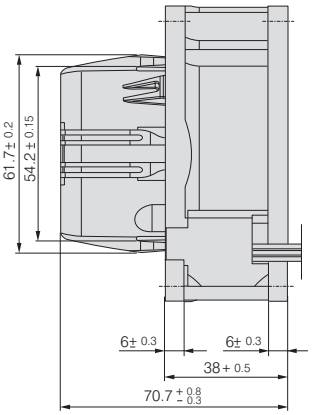


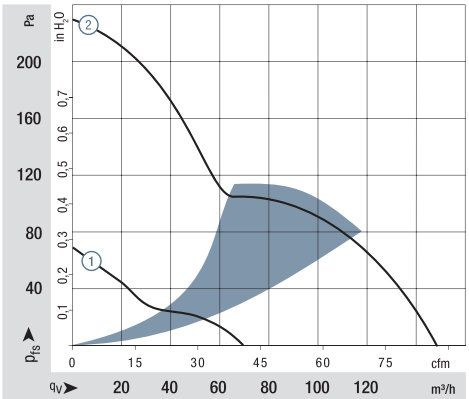


Air performance measured according to: ISO 5801.
Installation category A, without contact protection.
Noise: Total sound power level $L_{WA}$ ISO 10302 measured on a hemisphere with a radius of 2 m.
Sound pressure level $L_{pA}$ measured at 1 m distance from fan axis.
The values given are applicable only under the specified measuring conditions and may differ depending on the installation conditions.
In the event of deviation from the standard configuration, the parametersmust be checked after installation!
For detailed information see
http://www.ebmpapst.com/general conditions

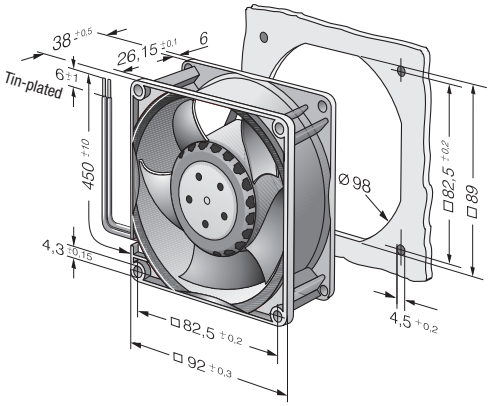

Max. 205 m³/h

# ACmaxx axial fans

☐ 119 x 25 mm



- **Material:** Housing: GRP[1] (PBTP)
  Impeller: GRP[1] (PA)
- **Direction of air flow:** Exhaust over struts
- **Direction of rotation:** Counterclockwise, looking towards rotor
- **Connection:** Via single wires AWG 22, TR 64
- **Highlights:** Universally usable for all power voltages between 85 and 265 VAC
- **Weight:** 370 g

- **Possible special versions:**
  (See chapter DC fans - specials)
  - Speed signal
  - Go / NoGo alarm
  - Alarm with speed limit
  - External temperature sensor
  - Internal temperature sensor
  - PWM control input
  - Analog control input
  - Moisture protection

1) Fiberglass-reinforced plastic

Series AC 4400 FN
VWC0119FSJBS

| Nominal data | Air flow | Air flow | Nominal voltage | Frequency | Voltage range | Sound pressure level | Sound power level | Sintec sleeve bearings / Ball bearings | Power consumption | Nominal speed | Temperature range | Service life $L_{10}$ (40 °C) ebm-papst standard / Service life $L_{10}$ ($T_{max}$) ebm-papst standard | Life expectancy $L_{10}$IPC (40 °C) see page 15 | Curve |
|---|---|---|---|---|---|---|---|---|---|---|---|---|---|---|
| **Type** | **m³/h** | **cfm** | **VAC** | **Hz** | **VAC** | **dB(A)** | **Bel(A)** | **□ / ■** | **Watts** | **rpm⁻¹** | **°C** | **Hours** | **Hours** | |
| AC 4400 FNN | 205 | 121 | **100...240** | **50 / 60** | 85...265 | 53 | 6.2 | ■ | 12 | 4 850 | -20...+70 | 60 000 / 30 000 | 102 500 | ① |

Subject to change

Speed variants available on request.

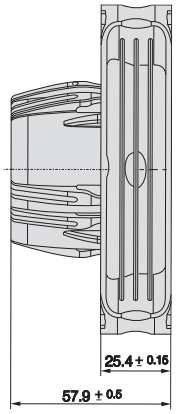


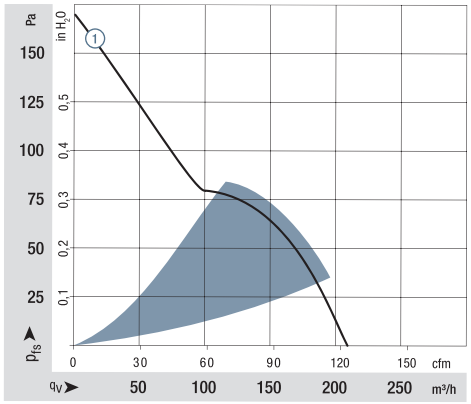


Air performance measured according to: ISO 5801.
Installation category A, without contact protection.
Noise: Total sound power level $L_{WA}$ ISO 10302 measured on a hemisphere with a radius of 2 m.
Sound pressure level $L_{pA}$ measured at 1 m distance from fan axis.
The values given are applicable only under the specified measuring conditions and may differ depending on the installation conditions.
In the event of deviation from the standard configuration, the parameters must be checked after installation!
For detailed information see
http://www.ebmpapst.com/general conditions

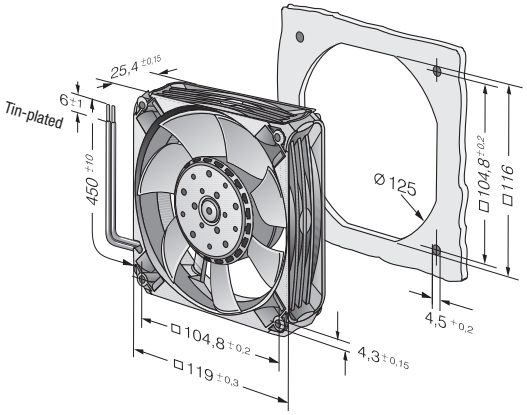




ebmpapst

Max. 204 m³/h

# ACmaxx axial fans

□ 119 x 32 mm



- **Material:** Housing: GRP[1)] (PBTP)
  Impeller: GRP[1)] (PA)
- **Direction of air flow:** Exhaust over struts
- **Direction of rotation:** Clockwise, looking towards rotor
- **Connection:** Via single wires AWG 22, TR 64
- **Highlights:** Universally usable for all power voltages between 85 and 265 VAC
- **Weight:** 325 g

- **Possible special versions:**
  (See chapter DC fans - specials)
  - Speed signal
  - Go / NoGo alarm
  - Alarm with speed limit
  - External temperature sensor
  - Internal temperature sensor
  - PWM control input
  - Analog control input
  - Moisture protection
  - Salt spray protection
  - Degree of protection: IP 65

1) Fiberglass-reinforced plastic

Series AC 4300
VWC0119ASJAZ

**Nominal data**

| Type | Air flow m³/h | Air flow cfm | Nominal voltage VAC | Frequency Hz | Voltage range VAC | Sound pressure level dB(A) | Sound power level Bel(A) | Sintec sleeve bearings / Ball bearings □/■ | Power consumption Watts | Nominal speed rpm⁻¹ | Temperature range °C | Service life $L_{10}$ (40 °C) ebm-papst standard Hours | Service life $L_{10}$ ($T_{max}$) ebm-papst standard Hours | Life expectancy $L_{10}$IPC (40 °C) see page 15 Hours | Curve |
|---|---|---|---|---|---|---|---|---|---|---|---|---|---|---|---|
| AC 4300 | 170 | 100 | **100...240** | **50 / 60** | 85...265 | 45 | 5.8 | ■ | 6.7 | 2 800 | -20...+50 | 70 000 / 25 000 | | 117 500 | ① |
| AC 4300 H | 204 | 120 | **100...240** | **50 / 60** | 85...265 | 51 | 6.4 | ■ | 12 | 3 400 | -20...+70 | 45 000 / 22 500 | | 75 500 | ② |

Subject to change

Speed variants available on request.

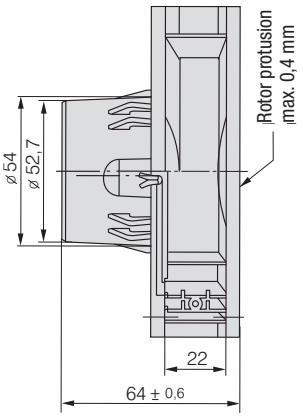


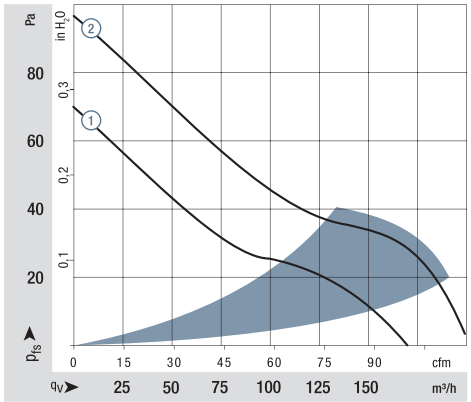


Air performance measured according to: ISO 5801.
Installation category A, without contact protection.
Noise: Total sound power level $L_{WA}$ ISO 10302 measured on a hemisphere with a radius of 2 m.
Sound pressure level $L_{pA}$ measured at 1 m distance from fan axis.
The values given are applicable only under the specified measuring conditions and may differ depending on the installation conditions.
In the event of deviation from the standard configuration, the parameters must be checked after installation!
For detailed information see
http://www.ebmpapst.com/general conditions

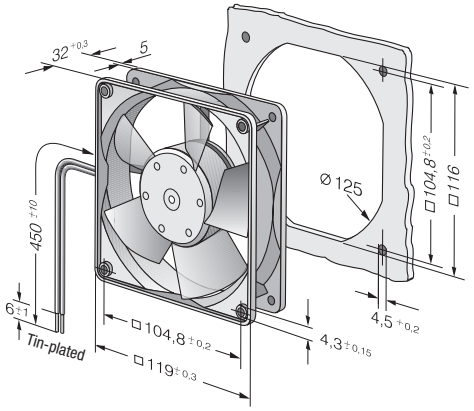

Max. 175 m³/h

# GreenTech EC tubeaxial fans

☐ 119 x 38 mm

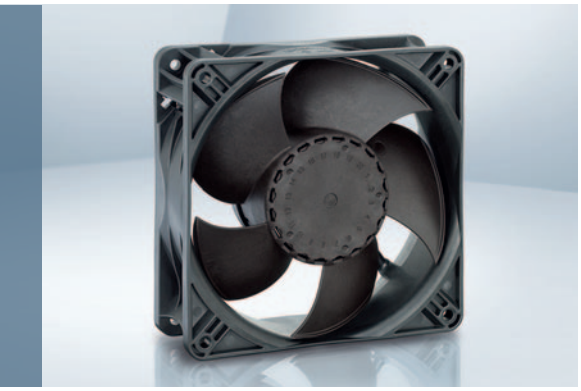

- **Material:** Housing: GRP[1] (PBT)
  Impeller: GRP[1] (PA)
- **Direction of air flow:** Exhaust over struts
- **Direction of rotation:** Clockwise, looking towards rotor
- **Connection:** Via single wires AWG 24
- **Highlights:** Power supply and drive electronics completely integrated. Universally usable for all powe voltages between 90 and 264 VAC. Compact design.
- **Weight:** 250 g

- **Possible special versions:**
  (See chapter DC fans - specials)
  - Moisture protection
  - Salt spray protection
  - Degree of protection: IP 65

1) Fiberglass-reinforced plastic

| Series ACi 4400 N<br>VWC0120YSGBS<br>**Nominal data** | Air flow | Air flow | **Nominal voltage** | **Frequency** | Voltage range | Sound pressure level | Sound power level | Sintec sleeve bearings<br>Ball bearings | Power consumption | Nominal speed | Temperature range | Service life $L_{10}$ (40 °C)<br>ebm-papst standard | Service life $L_{10}$ ($T_{max}$)<br>ebm-papst standard | Life expectancy $L_{10}$IPC<br>(40 °C) see page 15 | Curve |
|---|---|---|---|---|---|---|---|---|---|---|---|---|---|---|---|
| **Type** | **m³/h** | **cfm** | **VAC** | **Hz** | **VAC** | **dB(A)** | **Bel(A)** | ☐ / ■ | **Watts** | **rpm⁻¹** | **°C** | **Hours** | | **Hours** | |
| ACi 4400 NLU | 78 | 46 | **100...240** | **50 / 60** | 90...264 | 23 | 3.7 | ■ | 1.1 | 1 500 | -40...+75 | 65 000 / 25 000 | | 110 000 | ① |
| ACi 4400 NMLU | 100 | 59 | **100...240** | **50 / 60** | 90...264 | 25 | 4.1 | ■ | 1.7 | 1 850 | -40...+75 | 65 000 / 25 000 | | 110 000 | ② |
| ACi 4400 NNU | 140 | 82 | **100...240** | **50 / 60** | 90...264 | 36 | 4.8 | ■ | 2.8 | 2 700 | -40...+75 | 65 000 / 25 000 | | 110 000 | ③ |
| ACi 4400 NHU | 160 | 94 | **100...240** | **50 / 60** | 90...264 | 39 | 5.2 | ■ | 3.8 | 3 000 | -40...+70 | 65 000 / 25 000 | | 110 000 | ④ |
| ACi 4400 NHHU | 175 | 103 | **100...240** | **50 / 60** | 90...264 | 43 | 5.5 | ■ | 4.6 | 3 300 | -40...+70 | 65 000 / 25 000 | | 110 000 | ⑤ |

Subject to change

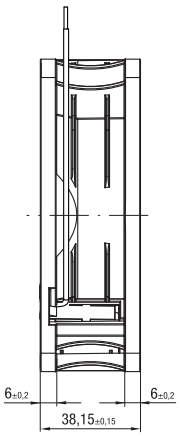


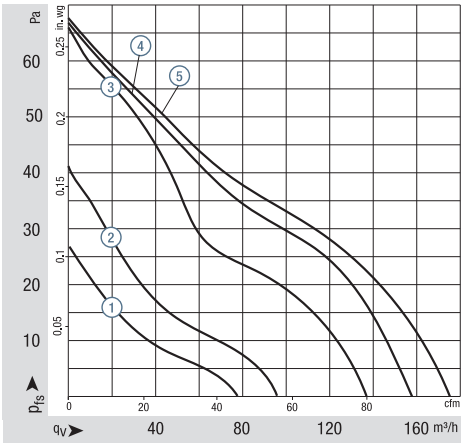


Air performance measured according to: ISO 5801.
Installation category A, without contact protection.
Noise: Total sound power level $L_{WA}$ ISO 10302 measured on a hemisphere with a radius of 2 m.
Sound pressure level $L_{pA}$ measured at 1 m distance from fan axis.
The values given are applicable only under the specified measuring conditions and may differ depending on the installation conditions.
In the event of deviation from the standard configuration, the parameters must be checked after installation!
For detailed information see
http://www.ebmpapst.com/general conditions

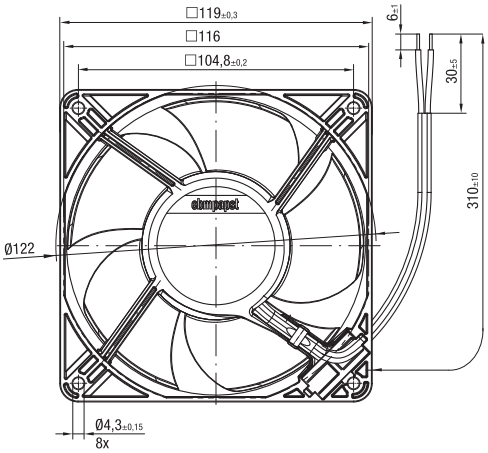

Max. 175 m³/h

# GreenTech EC tubeaxial fans

☐ 119 x 38 mm

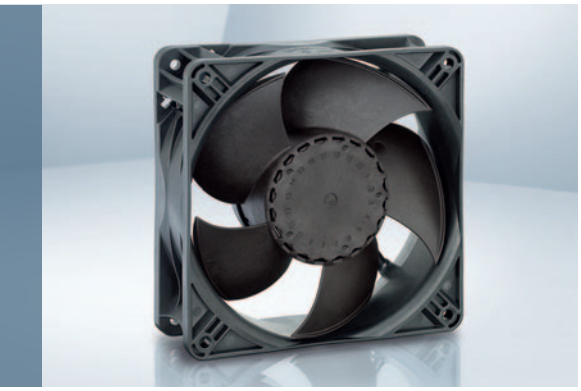

- **Material:** Housing: GRP[1] (PBT)
  Impeller: GRP[1] (PA)
- **Direction of air flow:** Exhaust over struts
- **Direction of rotation:** Clockwise, looking towards rotor
- **Connection:** Via single wires AWG 24
- **Highlights:** Power supply and drive electronics completely integrated. Universally usable for all powe voltages between 90 and 264 VAC. Compact design.
- **Weight:** 250 g

1) Fiberglass-reinforced plastic

- **Possible special versions:**
  (See chapter DC fans - specials)
  - Speed signal
  - PWM control input
  - Analog control input
  - Moisture protection
  - Salt spray protection
  - Degree of protection: IP 65
  - Approval for refrigeration products acc. to EN60335-24 / EN60335-89 and ATEX acc. to EN60079-15

| Series ACi 4400<br>VWC0120YSGBS<br>**Nominal data** | Air flow | Air flow | **Nominal voltage** | **Frequency** | Voltage range | Sound pressure level | Sound power level | Sintec sleeve bearings<br>Ball bearings | Power consumption | Nominal speed | Temperature range | Service life $L_{10}$ (40 °C)<br>ebm-papst standard | Service life $L_{10}$ ($T_{max}$)<br>ebm-papst standard | Life expectancy $L_{10IPC}$<br>(40 °C) see page 15 | Curve |
|---|---|---|---|---|---|---|---|---|---|---|---|---|---|---|---|
| **Type** | **m³/h** | **cfm** | **VAC** | **Hz** | **VAC** | **dB(A)** | **Bel(A)** | ☐ / ■ | **Watts** | **rpm⁻¹** | **°C** | **Hours** | | **Hours** | |
| ACi 4400 HHAU | 175 | 103 | **100...240** | **50 / 60** | 90...264 | 43 | 5.5 | ■ | 4.6 | 3 300 | -40...+75 | 65 000 / 25 000 | | 110 000 | ① |
| ACi 4400/2 HHPU | 175 | 103 | **100...240** | **50 / 60** | 90...264 | 43 | 5.5 | ■ | 4.6 | 3 300 | -40...+75 | 65 000 / 25 000 | | 110 000 | ① |

Subject to change

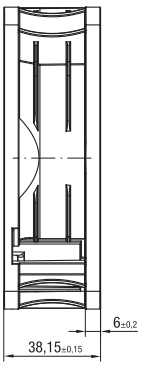


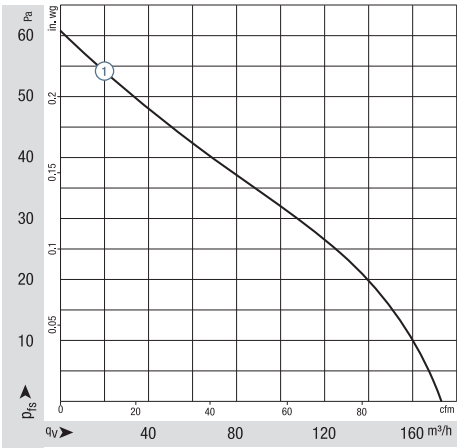


Air performance measured according to: ISO 5801.
Installation category A, without contact protection.
Noise: Total sound power level $L_{WA}$ ISO 10302 measured on a hemisphere with a radius of 2 m.
Sound pressure level $L_{pA}$ measured at 1 m distance from fan axis.
The values given are applicable only under the specified measuring conditions and may differ depending on the installation conditions.
In the event of deviation from the standard configuration, the parameters must be checked after installation!
For detailed information see
http://www.ebmpapst.com/general conditions

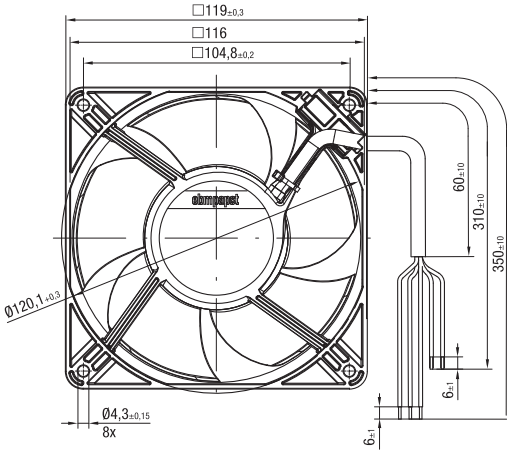

Max. 350 m³/h

# ACmaxx axial fans

## Ø 172 x 51 mm



- **Material:** Housing: Die-cast aluminum
  Impeller: GRP[1] (PA)
- **Direction of air flow:** Exhaust over struts
- **Direction of rotation:** Counterclockwise, looking towards rotor
- **Connection:** Via single wires AWG 22, TR 64
- **Highlights:** Universally usable for all power voltages between 85 and 265 VAC, 50-60 Hz
  Housing with grounding lug for screw M4 x 8 (Torx)
- **Weight:** 900 g

1) Fiberglass-reinforced plastic

- **Possible special versions:**
  (See chapter DC fans - specials)
  - Speed signal
  - Go / NoGo alarm
  - Alarm with speed limit
  - External temperature sensor
  - Internal temperature sensor
  - PWM control input
  - Analog control input
  - Moisture protection
  - Salt spray protection
  - Degree of protection: IP 65

Series AC 6200 N
VWS0143XSLCS

**Nominal data**

| Type | Air flow m³/h | Air flow cfm | Nominal voltage VAC | Frequency Hz | Voltage range VAC | Sound pressure level dB(A) | Sound power level Bel(A) | Sintec sleeve bearings / Ball bearings □/■ | Power consumption Watts | Nominal speed rpm⁻¹ | Temperature range °C | Service life $L_{10}$ (40 °C) ebm-papst standard Hours | Service life $L_{10}$ ($T_{max}$) ebm-papst standard Hours | Life expectancy $L_{10IPC}$ (40 °C) see page 15 Hours | Curve |
|---|---|---|---|---|---|---|---|---|---|---|---|---|---|---|---|
| AC 6200 NM | 350 | 206 | **100...240** | **50 / 60** | 85...265 | 50 | 5.7 | ■ | 14 | 2 850 | -20...+70 | 80 000 / 40 000 | | 135 000 | ① |

Subject to change

Speed variants available on request.

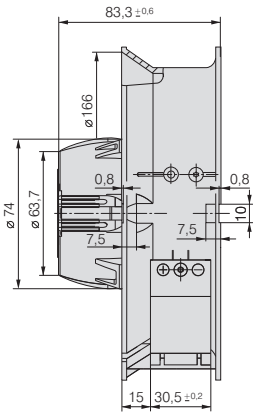


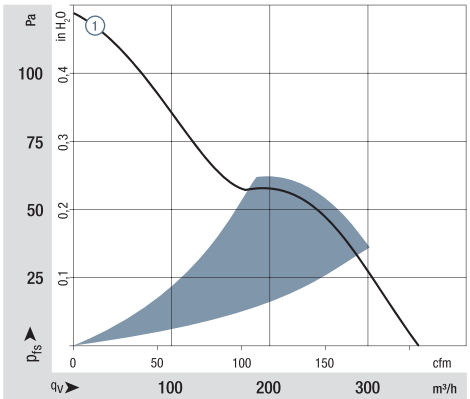


Air performance measured according to: ISO 5801.
Installation category A, without contact protection.
Noise: Total sound power level $L_{WA}$ ISO 10302 measured on a hemisphere with a radius of 2 m.
Sound pressure level $L_{pA}$ measured at 1 m distance from fan axis.
The values given are applicable only under the specified measuring conditions and may differ depending on the installation conditions.
In the event of deviation from the standard configuration, the parameters must be checked after installation!
For detailed information see
http://www.ebmpapst.com/general conditions

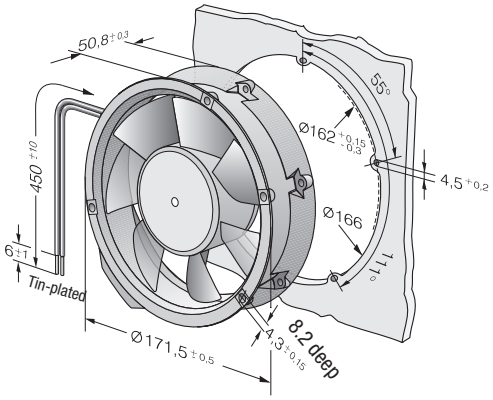

Max. 370 m³/h

# Energy-saving axial fans

## Ø 130 mm



- **Material:** Housing: PP plastic, fiberglass-reinforced; Blades: PA plastic, fiberglass-reinforced
- **Number of blades:** 7
- **Direction of air flow:** "V", exhaust over struts
- **Direction of rotation:** Counterclockwise, looking towards rotor
- **Degree of protection:** IP 54
- **Insulation class:** "B"
- **Installation position:** Any
- **Condensation drainage holes:** None
- **Mode of operation:** Continuous operation (S1)
- **Bearings:** Maintenance-free ball bearings

VWS0130XSLBS

**Nominal data**

| Type | Motor | Curve | Nominal voltage | Frequency | Nominal speed | Max. power consumption[1] | Max. input current[1] | Max. back-pressure | Admissible amb. temp. | Weight | Connection diagram |
|---|---|---|---|---|---|---|---|---|---|---|---|
| | | | VAC | Hz | rpm⁻¹ | W | A | Pa | °C | kg | |
| **W1G130-AA49 -01** | M1G055-AI | Ⓐ | 1~ 115 | 50/60 | 3200 | 24 | 0.38 | 90 | -30..+60 | 0.75 | p. 281 / J7) |
| **W1G130-AA25 -01** | M1G055-AI | Ⓑ | 1~ 230 | 50/60 | 3200 | 24 | 0.19 | 90 | -30..+70 | 0.75 | p. 281 / J7) |

Subject to change

[1] Nominal data in operating point with maximum load and 115 or 230 VAC

**Curves:**

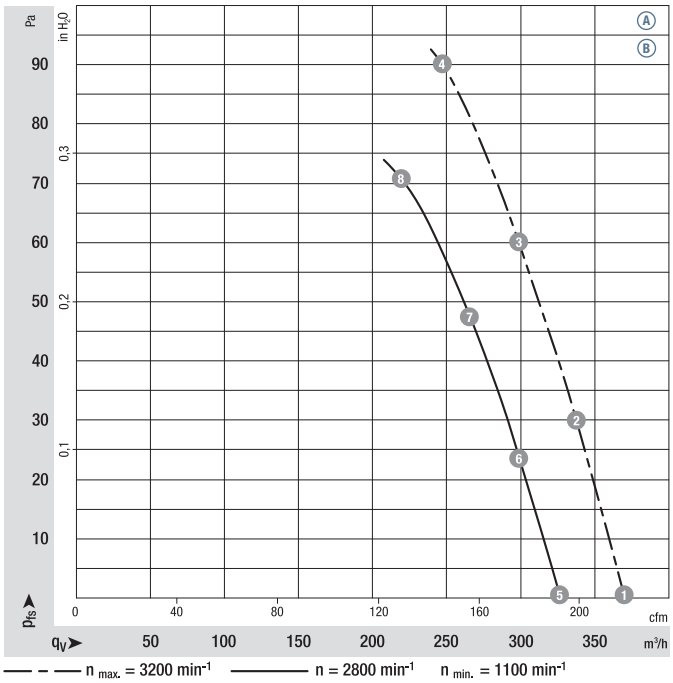


| | n rpm⁻¹ | $P_{ed}$ W | I A | $L_WA$ dB(A) |
|---|---|---|---|---|
| Ⓐ 1 | 3200 | 23 | 0.38 | 63 |
| Ⓐ 2 | 3200 | 24 | 0.38 | 61 |
| Ⓐ 3 | 3200 | 24 | 0.38 | 60 |
| Ⓐ 4 | 3200 | 24 | 0.38 | 63 |
| Ⓐ 5 | 2800 | 16 | 0.26 | 60 |
| Ⓐ 6 | 2800 | 16 | 0.26 | 58 |
| Ⓐ 7 | 2800 | 16 | 0.26 | 57 |
| Ⓐ 8 | 2800 | 16 | 0.26 | 60 |
| Ⓑ 1 | 3200 | 23 | 0.19 | 63 |
| Ⓑ 2 | 3200 | 24 | 0.19 | 61 |
| Ⓑ 3 | 3200 | 24 | 0.19 | 60 |
| Ⓑ 4 | 3200 | 24 | 0.19 | 63 |
| Ⓑ 5 | 2800 | 16 | 0.13 | 60 |
| Ⓑ 6 | 2800 | 16 | 0.13 | 58 |
| Ⓑ 7 | 2800 | 16 | 0.13 | 57 |
| Ⓑ 8 | 2800 | 16 | 0.13 | 60 |

— – — $n_{max.}$ = 3200 min⁻¹ ——— n = 2800 min⁻¹ $n_{min.}$ = 1100 min⁻¹

Air performance measured according to: ISO 5801, installation category A, in ebm-papst full nozzle without contact protection. Suction-side noise levels: $L_WA$ according to ISO 13347, $L_pA$ measured at 1 m distance from fan axis. The values given are applicable only under the specified measuring conditions and may differ depending on the installation conditions. In the event of deviation from the standard configuration, the parameters must be checked after installation! For detailed information see http://www.ebmpapst.com/general conditions



ebmpapst

- **Motor protection:** Via electronics and thermal overload protector
- **Electrical hookup:** Plug-in connection on motor side
- **Protection class:** II
- **Conformity with standard(s):** CE; EN 60335-1
- **Approvals:** VDE, GOST (are available); UL, CSA (are applied for)
- **Speed:** Using the programming unit 2 speeds between $n_{min}$ and $n_{max}$ can be programmed

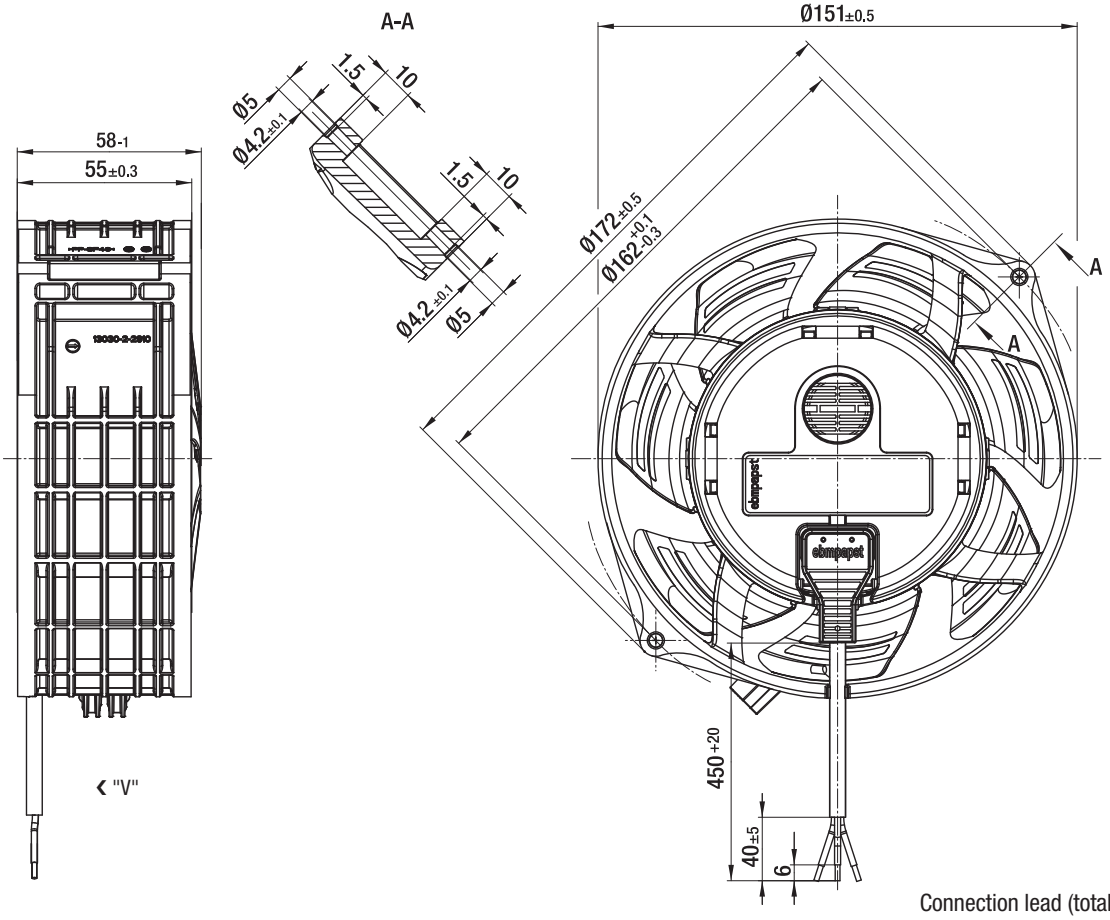


Connection lead (total length 450 mm) is fitted ex works and can be detached.

Max. 1065 m³/h

# EC axial fans

## Ø 200 mm



- **Material:** Housing: Die-cast aluminum; Blades: PP plastic; Rotor: Thick-film passivated
- **Number of blades:** 7
- **Direction of air flow:** "V"
- **Direction of rotation:** Counterclockwise, looking towards rotor
- **Degree of protection:** Depending on installation and position[2]
- **Insulation class:** "B"
- **Installation position:** Any
- **Condensate discharges:** None, open rotor
- **Mode of operation:** Continuous operation (S1)
- **Bearings:** Maintenance-free ball bearings

VWT0200XSLCS

**Nominal data**

| Type | Motor | Curve | Nominal voltage | Frequency | Nominal speed | Max. power consumption[1] | Max. input current[1] | Max. back-pressure | Admissible amb. temp. | Weight | Technical features and connection diagram |
|---|---|---|---|---|---|---|---|---|---|---|---|
| | | | VAC | Hz | rpm⁻¹ | W | A | Pa | °C | kg | |
| **W3G200-HD01 -01** | M3G055-BD | Ⓐ | 1~ 200-240 | 50/60 | 2 900 | 54 | 0.55 | 96 | -25..+60 | 1.6 | P. 275 / H3) |
| **W3G200-HD01 -03** | M3G055-BD | Ⓑ | 1~ 200-240 | 50/60 | 2 900 | 54 | 0.55 | 96 | -25..+60 | 1.6 | P. 276 / H4) |
| **W3G200-HD23 -10** | M3G055-BD | Ⓒ | 1~ 115 | 50/60 | 2 900 | 65 | 1.00 | 94 | -25..+60 | 1.6 | P. 276 / H4) |

Subject to change

[1] Nominal data in operating point with maximum load and 230 VAC

[2] Not suitable for permanent outdoor use. Special version available on request.

**Curves:**

Ⓐ **2 Speed stages**

Ⓑ Ⓒ **Speed-controlled**

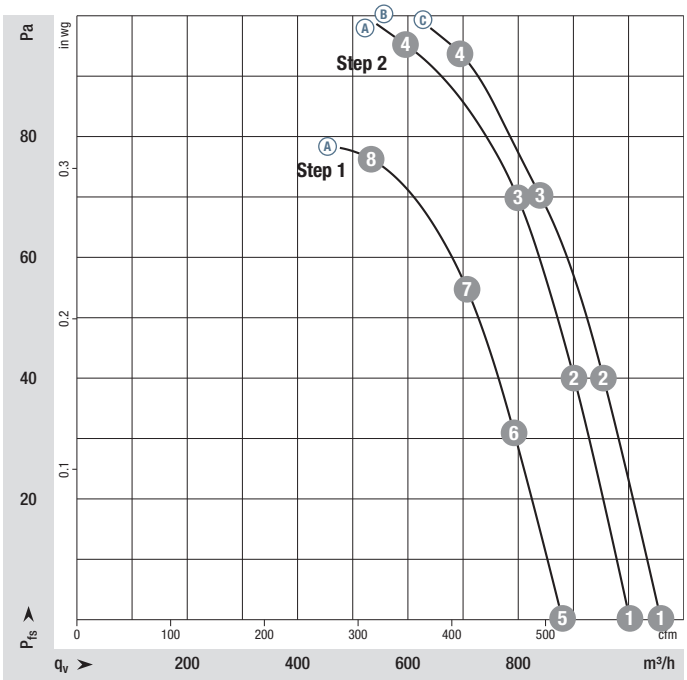


| | n rpm⁻¹ | $P_{ed}$ W | I A | $L_WA$ dB(A) |
|---|---|---|---|---|
| Ⓐ 1 | 2970 | 50 | 0.49 | 65 |
| Ⓐ 2 | 2890 | 54 | 0.53 | 64 |
| Ⓐ 3 | 2830 | 58 | 0.56 | 65 |
| Ⓐ 4 | 2900 | 54 | 0.55 | 70 |
| Ⓐ 5 | 2645 | 36 | 0.37 | 62 |
| Ⓐ 6 | 2575 | 39 | 0.40 | 61 |
| Ⓐ 7 | 2530 | 42 | 0.42 | 62 |
| Ⓐ 8 | 2500 | 43 | 0.43 | 67 |
| Ⓑ 1 | 2970 | 50 | 0.49 | 65 |
| Ⓑ 2 | 2890 | 54 | 0.53 | 64 |
| Ⓑ 3 | 2830 | 58 | 0.56 | 65 |
| Ⓑ 4 | 2900 | 54 | 0.55 | 70 |
| Ⓒ 1 | 3150 | 62 | 1.00 | 66 |
| Ⓒ 2 | 3050 | 65 | 1.00 | 66 |
| Ⓒ 3 | 2930 | 65 | 1.00 | 72 |
| Ⓒ 4 | 2900 | 65 | 1.00 | 74 |

Air performance measured according to: ISO 5801. Installation category A, without contact protection. Suction-side noise levels: $L_WA$ according to ISO 13347, $L_pA$ measured at 1 m distance from fan axis. The values given are applicable only under the specified measuring conditions and may differ depending on the installation conditions. In the event of deviation from the standard configuration, the parameters must be checked after installation! For detailed information see http://www.ebmpapst.com/general conditions



ebmpapst

- **Technical features:** See connection diagram p. 275/276
- **Touch current:** <= 3.5 mA acc. to IEC 60990 (test circuit, illustration 4)
- **Electrical hookup:** Via terminal strip
- **Protection class:** I (with customer connection to grounding conductor)
- **Conformity with standard(s):** EN 60335-1, CE
- **Approvals:** VDE, cUR$_{US}$

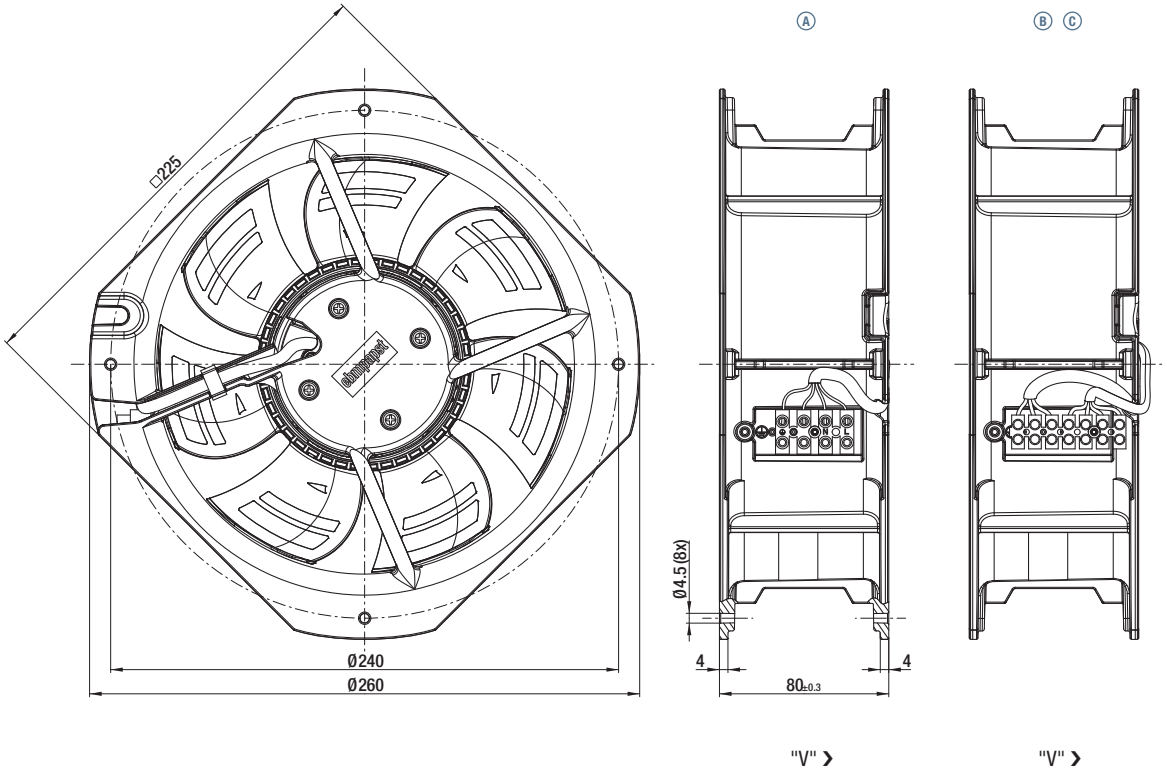

Max. 1910 m³/h

# EC axial fans

## Ø 250 mm



- **Material:** Housing: Die-cast aluminum; Blades: PP plastic; Rotor: Thick-film passivated
- **Number of blades:** 7
- **Direction of air flow:** "V"
- **Direction of rotation:** Counterclockwise, looking towards rotor
- **Degree of protection:** Depending on installation and position[2]
- **Insulation class:** "B"
- **Installation position:** Any
- **Condensate discharges:** None, open rotor
- **Mode of operation:** Continuous operation (S1)
- **Bearings:** Maintenance-free ball bearings

VWT0250XSLES

**Nominal data**

| Type | Motor | Curve | Nominal voltage | Frequency | Nominal speed | Max. power consumption[1] | Max. input current[1] | Max. back-pressure | Admissible amb. temp. | Weight | Technical features and connection diagram |
|---|---|---|---|---|---|---|---|---|---|---|---|
| | | | VAC | Hz | rpm⁻¹ | W | A | Pa | °C | kg | |
| **W3G250-HH07 -01** | M3G055-CF | Ⓐ | 1~ 200-240 | 50/60 | 2 330 | 83 | 0.72 | 100 | -25...+60 | 2.1 | P. 275 / H3) |
| **W3G250-HH07 -03** | M3G055-CF | Ⓑ | 1~ 200-240 | 50/60 | 2 330 | 83 | 0.72 | 100 | -25...+60 | 2.1 | P. 276 / H4) |
| **W3G250-HH53 -03** | M3G055-CF | Ⓒ | 1~ 115 | 50/60 | 2 040 | 56 | 0.90 | 80 | -25...+50 | 2.1 | P. 276 / H4) |
| **W3G250-HK35 -11** | M3G055-CF | Ⓓ | 1~ 115 | 50/60 | 2 700 | 125 | 1.90 | 130 | -25...+60 | 2.1 | P. 276 / H4) |

Subject to change

[1] Nominal data in operating point with maximum load and 230 VAC

[2] Not suitable for permanent outdoor use. Special version available on request.

**Curves:**

Ⓐ **2 Speed stages**

Ⓑ Ⓒ Ⓓ **Speed-controlled**

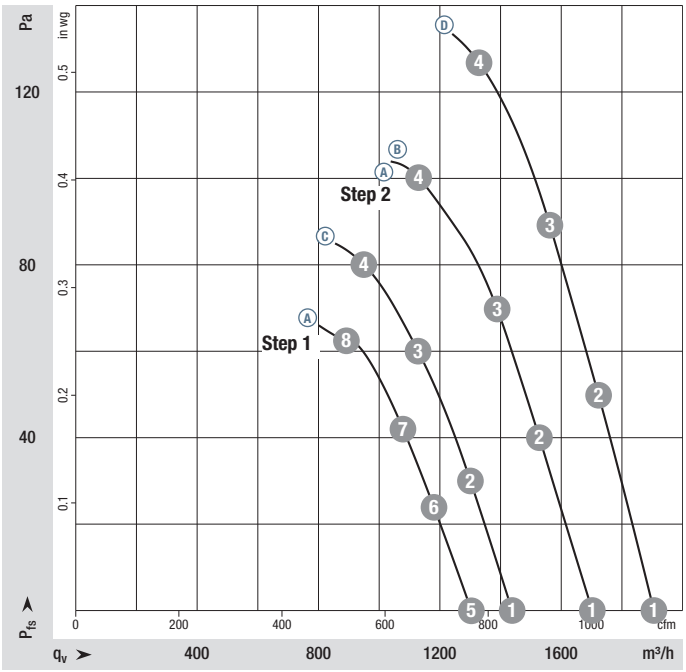


| | n rpm⁻¹ | $P_{ed}$ W | I A | $L_WA$ dB(A) |
|---|---|---|---|---|
| Ⓐ 1 | 2465 | 67 | 0.59 | 69 |
| Ⓐ 2 | 2410 | 75 | 0.65 | 69 |
| Ⓐ 3 | 2375 | 80 | 0.68 | 68 |
| Ⓐ 4 | 2330 | 83 | 0.72 | 69 |
| Ⓐ 5 | 1900 | 33 | 0.33 | 63 |
| Ⓐ 6 | 1880 | 37 | 0.37 | 63 |
| Ⓐ 7 | 1860 | 40 | 0.38 | 62 |
| Ⓐ 8 | 1850 | 42 | 0.40 | 63 |
| Ⓑ 1 | 2465 | 67 | 0.59 | 69 |
| Ⓑ 2 | 2410 | 75 | 0.65 | 69 |
| Ⓑ 3 | 2375 | 80 | 0.68 | 68 |
| Ⓑ 4 | 2330 | 83 | 0.72 | 69 |
| Ⓒ 1 | 2140 | 43 | 0.72 | 63 |
| Ⓒ 2 | 2100 | 49 | 0.80 | 63 |
| Ⓒ 3 | 2070 | 53 | 0.86 | 64 |
| Ⓒ 4 | 2040 | 56 | 0.90 | 65 |
| Ⓓ 1 | 2820 | 93 | 1.43 | 70 |
| Ⓓ 2 | 2760 | 106 | 1.61 | 71 |
| Ⓓ 3 | 2725 | 114 | 1.72 | 71 |
| Ⓓ 4 | 2700 | 125 | 1.90 | 71 |

Air performance measured according to: ISO 5801. Installation category A, without contact protection. Suction-side noise levels: $L_WA$ according to ISO 13347, $L_pA$ measured at 1 m distance from fan axis. The values given are applicable only under the specified measuring conditions and may differ depending on the installation conditions. In the event of deviation from the standard configuration, the parameters must be checked after installation! For detailed information see http://www.ebmpapst.com/general conditions



ebmpapst

- **Technical features:** See connection diagram p. 275/276
- **Touch current:** <= 3.5 mA acc. to IEC 60990 (test circuit, illustration 4)
- **Electrical hookup:** Via terminal strip
- **Protection class:** I (with customer connection to grounding conductor)
- **Conformity with standard(s):** EN 60335-1, CE
- **Approvals:** VDE, cUR$_{US}$

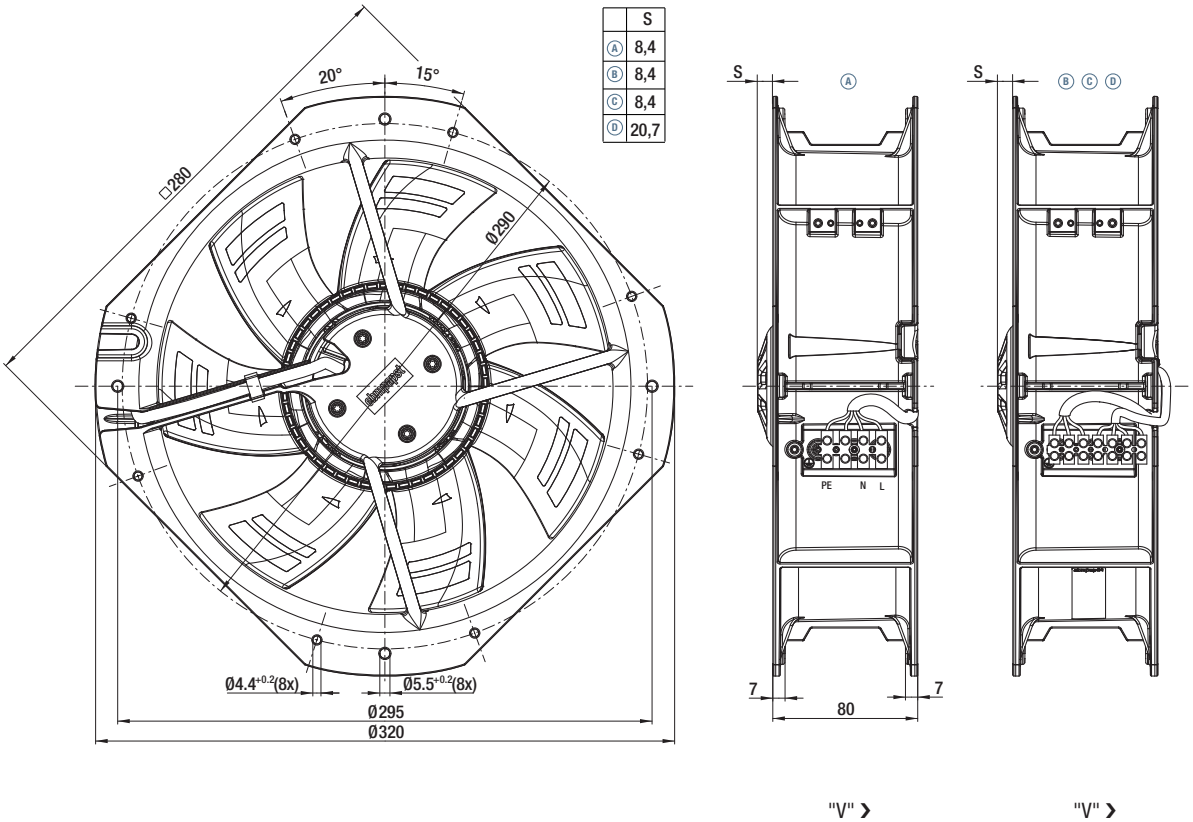

Max. 135 m³/h

# ACmaxx in-line duct fan

## Ø 98.5 x 130 mm



- **Material:** Housing: GRP[1] (PBT)
  Impeller: GRP[1] (PA)
- **Direction of air flow:** Intake over struts
- **Direction of rotation:** Clockwise, looking towards rotor
- **Connection:** Via 3-pin Europa terminal strip max. 1.5 mm²
- **Highlights:** Universally usable for all main voltages between 85 and 265 VAC, 50-60 Hz, Boost function
  Vibration-isolated motor
  Optional: new impeller for high pressure. Two speeds over jumper adjustable
- **Weight:** 400 g

- **Possible special versions:**
  (See chapter DC fans - specials)
  - Speed signal
  - PWM control input
  - Analog control input 0...10 VDC
  - Moisture protection
  - Degree of protection: IP 44 (IP 45 possible depending on installation position)

1) Fiberglass-reinforced plastic

| Series AC 100 VUS0092XSGBS<br>**Nominal data** | | Air flow | Air flow | Nominal voltage | Frequency | Voltage range | Sound pressure level | Sound power level | Sintec sleeve bearings / Ball bearings | Power consumption | Nominal speed | Temperature range | Service life $L_{10}$ (40 °C) ebm-papst standard / Service life $L_{10}$ ($T_{max}$) ebm-papst standard | Life expectancy $L_{10IPC}$ (40 °C) see page 15 | Curve |
|---|---|---|---|---|---|---|---|---|---|---|---|---|---|---|---|
| | **Type high air flow** | **m³/h** | **cfm** | **VAC** | **Hz** | **VAC** | **dB(A)** | **Bel(A)** | **□ / ■** | **Watts** | **rpm⁻¹** | **°C** | **Hours** | **Hours** | |
| Nominal ▼ boost | AC 100 MR | 55 | 32 | **100...240** | **50-60** | 85...265 | 33 | 4.5 | ■ | 1.8 | 2 050 | -10...+55 | 70 000 / 50 000 | 117 500 | ① |
| | | 90 | 53 | | | | 40 | 5.0 | | 3.8 | 3 150 | | | | ③ |
| Nominal ▼ Boost | AC 100 NR | 80 | 47 | **100...240** | **50-60** | 85...265 | 35 | 4.7 | ■ | 2.5 | 2 750 | -10...+55 | 70 000 / 50 000 | 117 500 | ② |
| | | 105 | 62 | | | | 42 | 5.3 | | 4.5 | 3 500 | | | | ④ |
| Max. | AC 100 HR* | 135 | 79 | **100...240** | **50-60** | 85...265 | tbd | tbd | ■ | 7.0 | 4 500 | -10...+55 | tbd | tbd | ⑤ |

Subject to change

* On request

| Impeller | Type | Boost off, Jumper low | Boost off, Jumper high | Boost on |
|---|---|---|---|---|
| High air flow | AC 100 MR | 1 250 | 2 050 | 3 150 |
| High air flow | AC 100 NR | 2 200* | 2 750 | 3 500 |
| High pressure | AC 100 MR* | 1 250* | 2 050* | 3 150* |
| High pressure | AC 100 NR-017 | 2 180 | 2 680 | 3 300 |

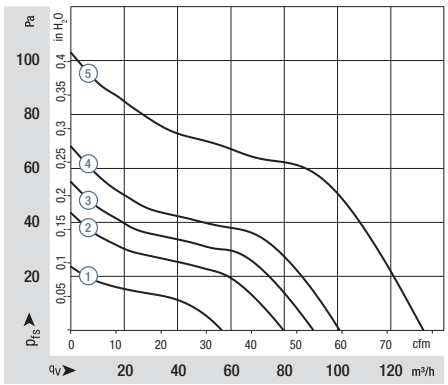


Air performance measured according to: ISO 5801.
Installation category A, without contact protection.
Noise: Total sound power level $L_{WA}$ ISO 10302 measured on a hemisphere with a radius of 2 m.
Sound pressure level $L_{pA}$ measured at 1 m distance from fan axis.
The values given are applicable only under the specified measuring conditions and may differ depending on the installation conditions.
In the event of deviation from the standard configuration, the parameters must be checked after installation!
For detailed information see
http://www.ebmpapst.com/general conditions

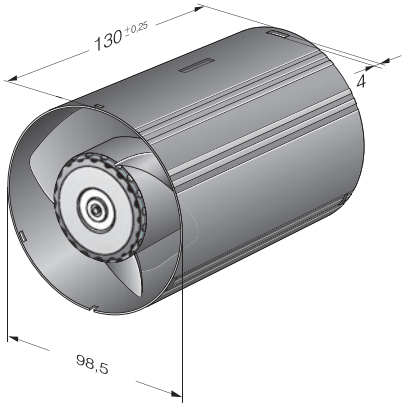




ebmpapst

Max. 135 m³/h

# ACmaxx in-line duct fan

## Ø 98.5 x 130 mm



- **Material:** Housing: GRP[1] (PBT)
  Impeller: GRP[1] (PA)
- **Direction of air flow:** Intake over struts
- **Direction of rotation:** Clockwise, looking towards rotor
- **Connection:** Via 3-pin Europa terminal strip max. 1.5 mm²
- **Highlights:** Universally usable for all main voltages between 85 and 265 VAC, 50-60 Hz, Boost function
  Vibration-isolated motor
  Optional: new impeller for high pressure. Two speeds over jumper adjustable
- **Weight:** 400 g

- **Possible special versions:**
  (See chapter DC fans - specials)
  - Speed signal
  - PWM control input
  - Analog control input 0...10 VDC
  - Moisture protection
  - Degree of protection: IP 44 (IP 45 possible depending on installation position)

1) Fiberglass-reinforced plastic

Series AC 100
VUS0092XSGBS

**Nominal data**

| | Type high pressure | Air flow m³/h | Air flow cfm | Nominal voltage VAC | Frequency Hz | Voltage range VAC | Sound pressure level dB(A) | Sound power level Bel(A) | Sintec sleeve bearings □ / Ball bearings ■ | Power consumption Watts | Nominal speed rpm⁻¹ | Temperature range °C | Service life $L_{10}$ (40 °C) ebm-papst standard Hours | Service life $L_{10}$ ($T_{max}$) ebm-papst standard Hours | Life expectancy $L_{10}$IPC (40 °C) see page 15 Hours | Curve |
|---|---|---|---|---|---|---|---|---|---|---|---|---|---|---|---|---|
| Nominal | AC 100 MR* | 40 | 23 | **100...240** | **50-60** | 85...265 | 31 | 4.2 | ■ | tbd | 2 050* | -10...+55 | 70 000 / 50 000 | | 117 500 | ⑥ |
| Boost | | 62 | 36 | | | | 38 | 4.7 | | tbd | 3 150* | | | | | ⑧ |
| Nominal | AC 100 NR-017 | 53 | 31 | **100...240** | **50-60** | 85...265 | 33 | 4.4 | ■ | 2.8 | 2 680 | -10...+55 | 70 000 / 50 000 | | 117 500 | ⑦ |
| Boost | | 66 | 39 | | | | 40 | 5.0 | | 3.5 | 3 300 | | | | | ⑧ |

Subject to change

* on request

| Impeller | Type | Boost off, Jumper low | Boost off, Jumper high | Boost on |
|---|---|---|---|---|
| High air flow | AC 100 MR | 1 250 | 2 050 | 3 150 |
| High air flow | AC 100 NR | 2 200* | 2 750 | 3 500 |
| High pressure | AC 100 MR* | 1 250* | 2 050* | 3 150* |
| High pressure | AC 100 NR-017 | 2 180 | 2 680 | 3 300 |

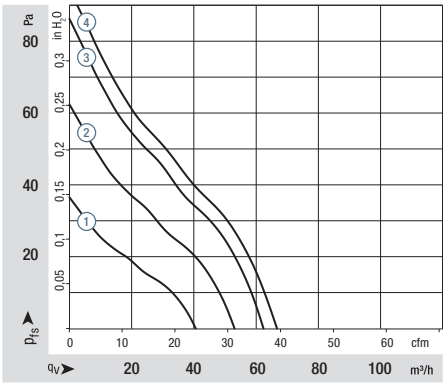


Air performance measured according to: ISO 5801.
Installation category A, without contact protection.
Noise: Total sound power level $L_{WA}$ ISO 10302 measured on a hemisphere with a radius of 2 m.
Sound pressure level $L_{pA}$ measured at 1 m distance from fan axis.
The values given are applicable only under the specified measuring conditions and may differ depending on the installation conditions.
In the event of deviation from the standard configuration, the parameters must be checked after installation!
For detailed information see
http://www.ebmpapst.com/general conditions

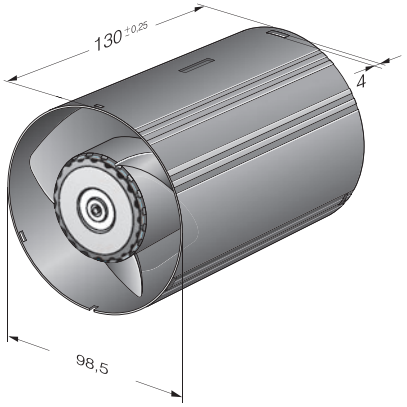

| | |
|---|---|
| **Highest energy efficiency:** | 0.03 - 0.045 W/m³/h free air (specific fan power). |
| **Boost speed:** | 2 speed settings possible via boost function. |
| **Vibration isolation:** | Reduced transmission of vibrations from motor to housing. |
| **Intelligence:** | Can be expanded to include set value requirement and signal outputs as an option. |

## Examples of connections

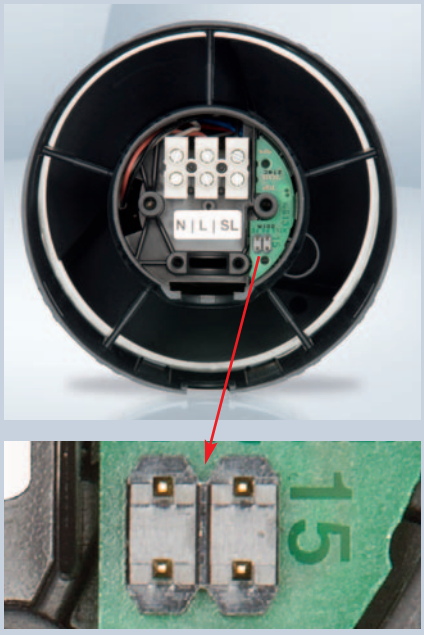


**Jumper Low** **Jumper High**

**Example 1:**
Nom speed endurance
Boost via light switch

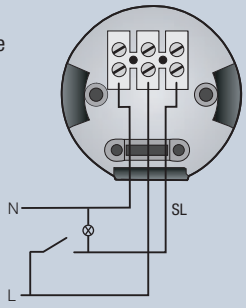


**Example 2:**
Nom speed via
light switch
Separate boost switch

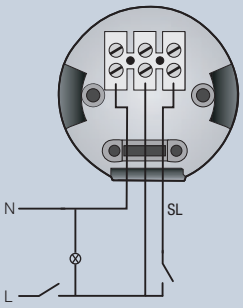


**Example 3:**
Simple connection
Nom speed without
switching

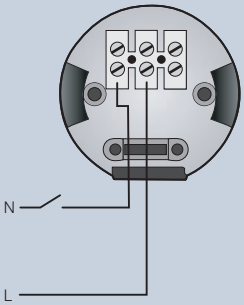


**Example 4:**
Simple connection
Boost without switching

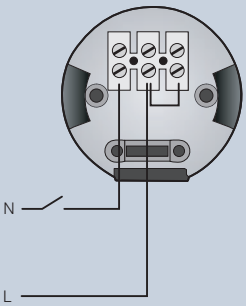


## Scope of delivery



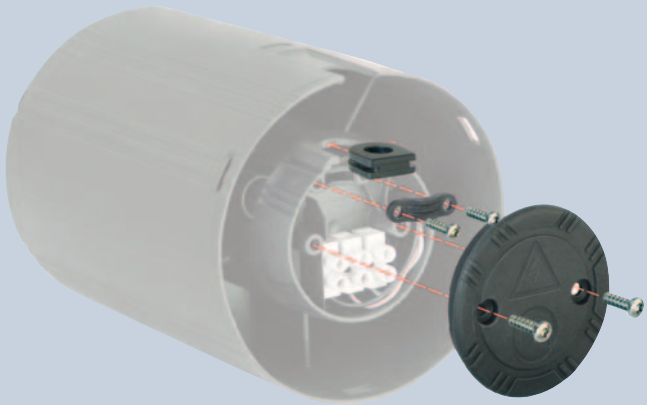



ebmpapst



# AC axial fans




AC axial fan overview 217
AC axial fans 218

# AC axial fans

*Technical information*



**Product line**
The renowned ebm-papst AC fans are used when DC voltage is not available. The AC range of fans is based on experience gained from decades of development know-how, millions of units in series production, and the innovation competence of a world-wide technology pioneer.

In this catalog, we offer you the broad spectrum of our AC fans. In addition to complete systems, you will also find fans without external housing. They offer economic benefits whenever the air duct design can be integrated in the respective device.

**Variety of sizes**
AC fans are available in a variety of sizes with either air exhaust or air intake over struts. Silent running models with sleeve bearings. Electrical connection with plug connection or external exposed connection wires are available.

**Shaded-pole or capacitor motors**
Fan drives by shaded-pole or capacitor motors, most of which incorporate the world-famous ebm-papst external rotor principle. The fan blades are directly attached to the external rotor of the external rotor motor. This construction combining high performance with profitability.

**Flat built AC fans**
ebm-papst also has AC fans with a particularly flat construction and an internal rotor motor. Their advantage: quick start to full speed. A plastic impeller and the smaller and lighter internal rotor motor result in lower rotational inertia.

**Bearings**
AC fans with sleeve bearings are powered by Class E insulated motors. Fans with ball bearings are equipped with Class B, E, or F insulated motors.

**Degree of protection**
All ebm-papst fans conform to the requirements of IP 20. IP 54 / IP 65 and special degrees of protection are available on request.

**AC voltage**
The line of AC fans for Euro voltage according to IEC 60038 (230 V ± 10 %) is also available in 115 V.

**Frequencies**
AC fans can be operated at frequencies of 50 or 60 Hz. In this case, their technical data changes accordingly.

**Capacitor**
Fans driven by capacitor external motors provide particularly high operating efficiency. Generally, the required motor run capacitor is already integrated in the fan housing.

**Overloading**
Almost all AC fans are protected against overloading (e. g. due to locked rotor) – either impedance protected (marked "Impedance protected" or "Z. P.") or equipped with a thermal switch (marked "Thermally protected" or "Th. P."). The model designation of these fans ends with "S".

# Axial fans for AC operation

## Overview of air performance

| Dimensions | Series | Air flow | Page |
|---|---|---|---|
| mm | | m³/h | |
| ☐ 80 x 38 | 8000 N | 30...61 | 218 |
| Ø 76 x 37 | 8000 TV | 24...47 | 219 |
| ☐ 92 x 25 | 3900 | 31...70 | 220 |
| ☐ 92 x 38 | 3000 | 49...89 | 221 |
| ☐ 119 x 25 | 9900 | 84...135 | 222 |
| ☐ 119 x 38 | 4000 N | 80...180 | 223 |
| ☐ 119 x 38 | 4000 Z | 100...180 | 224 |
| Ø 108 x 37 | 4600 TZ | 125...140 | 225 |
| ☐ 127 x 38 | 5900 | 150...206 | 226 |
| ☐ 135 x 38 | 5600 | 235...270 | 227 |
| 150 x 172 x 38 | W2E 142 | 320...380 | 228 |
| Ø 150 x 55 | W2S 130-AA | 325...380 | 229 |
| Ø 150 x 55 | W2S 130-BM | 380...425 | 230 |
| Ø 172 x 51 | W2E 143 | 375...500 | 231 |
| ☐ 225 x 80 | W2E 200 | 880...1030 | 232 |
| ☐ 280 x 80 | W2E 250 | 1865 | 234 |
| Ø 200 | K2E 200 | 765...830 | 236 |
| Ø 200 | K2E 200 | 765...845 | 238 |
| Ø 200 | K2D 200 | 780...880 | 240 |

Subject to change

## Overview of technically feasible designs

**Axial fans**

| Dimensions | Series | VDE, UL, CSA | SINTEC sleeve bearings/ Ball bearings | OPTIONAL: Speed signal | Moisture protection: IP >= 54 | Moisture protection: IP 65 | Salt spray protection | P. |
|---|---|---|---|---|---|---|---|---|
| mm | | | | | | | | |
| ☐ 80 x 38 | 8000 N | yes | ▫/■ | – | • | • | • | 218 |
| Ø 76 x 37 | 8000 TV | yes | ▫/■ | – | • | • | • | 219 |
| ☐ 92 x 25 | 3900 | yes | ▫/■ | – | • | – | – | 220 |
| ☐ 92 x 38 | 3000 | yes | ▫/■ | – | • | • | • | 221 |
| ☐ 119 x 25 | 9900 | yes | ▫/■ | – | • | – | – | 222 |
| ☐ 119 x 38 | 4000 N | yes | ▫/■ | • | • | • | • | 223 |
| ☐ 119 x 38 | 4000 Z | yes | ▫/■ | • | • | • | • | 224 |
| Ø 108 x 37 | 4600 TZ | yes | ▫/■ | – | • | • | • | 225 |
| ☐ 127 x 38 | 5900 | yes | ▫/■ | – | • | – | – | 226 |
| ☐ 135 x 38 | 5600 | yes | ■ | – | • | • | • | 227 |

Subject to change

• available – not yet available ▫ Sleeve bearings ■ Ball bearings

Max. 61 m³/h

# AC axial fans

☐ 80 x 38 mm



- **Material:** Housing: Die-cast aluminum
  Impeller: painted sheet steel
- **Direction of air flow:** Exhaust over struts
- **Direction of rotation:** Clockwise, looking towards rotor
- **Connection:** Via 2 single wires
  grounding lug for M4 x 8
- **Weight:** 490 g
- **Note:**
  Please note our ACmaxx series.
  With identical mounting dimensions and voltages, this series achieves greater energy efficiency.
  See page 196.

- **Possible special versions:**
  (See page 10)
  - Moisture protection
  - Salt spray protection
  - Degree of protection: IP 54 / IP 65

Series 8000 N
VWC0080AQHCS

| Nominal data | Air flow | Air flow | Nominal voltage | Frequency | Sound pressure level | Sound power level | Sintec sleeve bearings / Ball bearings | Power consumption | Nominal speed | Temperature range | Service life $L_{10}$ (40 °C) ebm-papst standard / Service life $L_{10}$ ($T_{max}$) ebm-papst standard | Life expectancy $L_{10IPC}$ (40 °C) see page 15 | Curve |
|---|---|---|---|---|---|---|---|---|---|---|---|---|---|
| **Type** | **m³/h** | **cfm** | **VAC** | **Hz** | **dB(A)** | **Bel(A)** | **□ / ■** | **Watts** | **rpm⁻¹** | **°C** | **Hours** | **Hours** | |
| 8880 N | 30 | 17.7 | **230** | **50** | 18 | 3.3 | □ | 9.0 | 1 750 | -10...+80 | 60 000 / 20 000 | 102 500 | ① |
| 8850 N | 37 | 21.8 | **230** | **50** | 24 | 3.9 | □ | 12.5 | 2 150 | -10...+70 | 52 500 / 27 500 | 87 500 | ② |
| 8550 N | 50 | 29.4 | **230** | **50** | 30 | 4.4 | □ | 12.0 | 2 700 | -10...+70 | 52 500 / 27 500 | 87 500 | ③ |
| 8556 N | 50 | 29.4 | **230** | **50** | 31 | 4.5 | ■ | 12.0 | 2 800 | -40...+90 | 52 500 / 10 000 | 87 500 | ③ |
| 8830 N | 36 | 21.2 | **115** | **60** | 21 | 3.7 | □ | 8.0 | 1 950 | -10...+80 | 62 500 / 20 000 | 105 000 | ④ |
| 8800 N | 47 | 27.7 | **115** | **60** | 28 | 4.3 | □ | 11.0 | 2 500 | -10...+70 | 55 000 / 27 500 | 92 500 | ⑤ |
| 8500 N | 61 | 35.9 | **115** | **60** | 34 | 4.8 | □ | 11.0 | 3 200 | -10...+75 | 55 000 / 22 500 | 92 500 | ⑥ |
| 8506 N | 61 | 35.9 | **115** | **60** | 35 | 5.0 | ■ | 11.0 | 3 300 | -40...+95 | 55 000 / 9 000 | 92 500 | ⑥ |

Subject to change

| Fan type | | | | | Length "L" | Connection wires |
|---|---|---|---|---|---|---|
| 8880 N | 8830 N | 8800 N | 8550 N | 8500 N | 310 mm long | AWG 18, TR 64 |
| 8556 N | 8506 N | | | | 310 mm long | AWG 22 |
| 8850 N | | | | | 440 mm long | AWG 18, TR 64 |

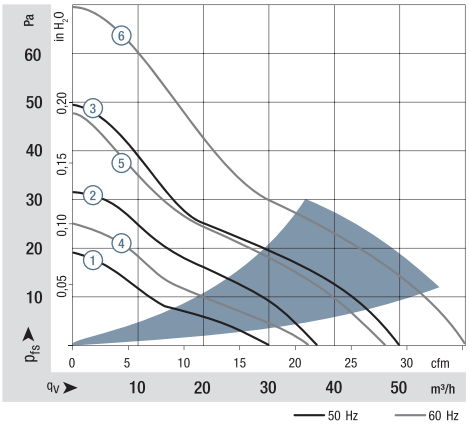


Air performance measured according to: ISO 5801.
Installation category A, without contact protection.
Noise: Total sound power level $L_{WA}$ ISO 10302 measured on a hemisphere with a radius of 2 m.
Sound pressure level $L_{pA}$ measured at 1 m distance from fan axis.
The values given are applicable only under the specified measuring conditions and may differ depending on the installation conditions.
In the event of deviation from the standard configuration, the parameters must be checked after installation!
For detailed information see
http://www.ebmpapst.com/general conditions

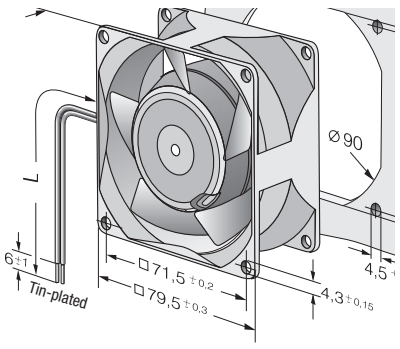

Max. 47 m³/h

# AC axial fans

## Ø 76 x 37 mm



- **Material:** Impeller: Die-cast aluminum
  Mounting bracket: Metal
- **Direction of air flow:** Exhaust over mounting bracket
- **Direction of rotation:** Clockwise,
  looking towards rotor
- **Connection:** Via 2 single wires
- **Weight:** 370 g

- **Possible special versions:**
  (See page 10)
  - Moisture protection
  - Salt spray protection
  - Degree of protection: IP 54 / IP 65

| Series 8000 TV<br>VVY0076XQHCS<br>**Nominal data** | Air flow | Air flow | **Nominal voltage** | **Frequency** | Sound pressure level | Sintec sleeve bearings<br>Ball bearings | Power consumption | Nominal speed | Temperature range | Service life $L_{10}$ (40 °C)<br>ebm-papst standard | Service life $L_{10}$ ($T_{max}$)<br>ebm-papst standard | Life expectancy $L_{10IPC}$<br>(40 °C) see page 15 |
|---|---|---|---|---|---|---|---|---|---|---|---|---|
| **Type** | **m³/h** | **cfm** | **VAC** | **Hz** | **dB(A)** | □/■ | **Watts** | **rpm⁻¹** | **°C** | **Hours** | | **Hours** |
| 8880 TV | 24 | 14.1 | **230** | **50** | 15 | □ | 9.0 | 1 650 | -10...+80 | 60 000 / 20 000 | | 102 500 |
| 8850 TV | 31 | 18.2 | **230** | **50** | 20 | □ | 12.0 | 2 100 | -10...+70 | 52 500 / 25 000 | | 87 500 |
| 8550 TV | 40 | 23.5 | **230** | **50** | 27 | □ | 12.0 | 2 650 | -10...+70 | 52 500 / 25 000 | | 87 500 |
| 8556 TV | 40 | 23.5 | **230** | **50** | 28 | ■ | 12.0 | 2 750 | -40...+90 | 52 500 / 15 000 | | 87 500 |
| 8830 TV | 27 | 15.9 | **115** | **60** | 18 | □ | 8.0 | 1 850 | -10...+80 | 62 500 / 20 000 | | 105 000 |
| 8800 TV | 36 | 21.2 | **115** | **60** | 24 | □ | 11.0 | 2 450 | -10...+70 | 55 000 / 27 500 | | 92 500 |
| 8500 TV | 47 | 27.7 | **115** | **60** | 32 | □ | 11.0 | 3 150 | -10...+75 | 55 000 / 22 500 | | 92 500 |
| 8506 TV | 47 | 27.7 | **115** | **60** | 33 | ■ | 11.0 | 3 250 | -40...+95 | 55 000 / 9 000 | | 92 500 |

Subject to change

The air flow and sound level of fans without external housing depend on the installation conditions.
The stated air flow and noise have been measured with an orifice 76.5 mm Ø at a distance of approx. 17 mm from the mounting bracket.
The air flow capacity of fan series 8000 N is achievable because of the exceptionally favorable installation conditions. The noise in the optimal operating range can be measured for these fans only in a specific application.

| Fan type | | | | Length "L" | Connection wires |
|---|---|---|---|---|---|
| 8880 TV | 8850 TV | 8830 TV | 8800 TV | 325 mm long | AWG 18, TR 64 |
| 8550 TV | 8500 TV | | | 325 mm long | AWG 18, TR 64 |
| 8556 TV | 8506 TV | | | 325 mm long | AWG 18 |

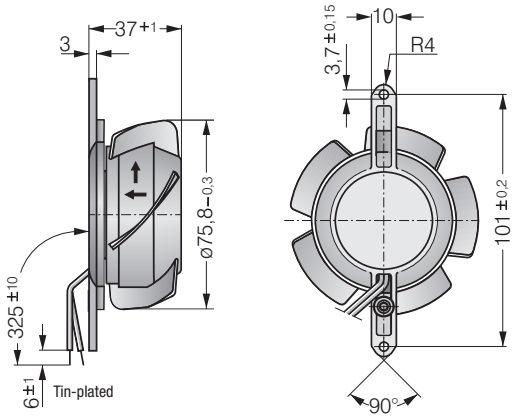

Max. 70 m³/h

# AC axial fans

□ 92 x 25 mm



- **Material:** Housing: Die-cast aluminum
  Impeller: Mineral-reinforced PA plastic
- **Direction of air flow:** Exhaust over struts
- **Direction of rotation:** Counterclockwise, looking towards rotor
- **Connection:** Via 2 flat plugs 2.8 x 0.5 mm grounding lug for M4
- **Weight:** 280 g
- **Note:**
  Please note our ACmaxx series.
  With identical mounting dimensions and voltages, this series achieves greater energy efficiency.
  See page 197.

- **Possible special versions:**
  (See page 10)
  - Moisture protection

| Series 3900<br>VWC0092AQFBS<br>**Nominal data** | Air flow | Air flow | **Nominal voltage** | **Frequency** | Sound pressure level | Sound power level | Sintec sleeve bearings<br>Ball bearings | Power consumption | Nominal speed | Temperature range | Service life $L_{10}$ (40 °C)<br>ebm-papst standard<br>Service life $L_{10}$ ($T_{max}$)<br>ebm-papst standard | Life expectancy $L_{10IPC}$<br>(40 °C) see page 15 | Curve |
|---|---|---|---|---|---|---|---|---|---|---|---|---|---|
| **Type** | **m³/h** | **cfm** | **VAC** | **Hz** | **dB(A)** | **Bel(A)** | **□ / ■** | **Watts** | **rpm⁻¹** | **°C** | **Hours** | **Hours** | |
| 3950 L | 31 | 18.2 | **230** | **50** | 24 | 3.8 | □ | 6.0 | 1 550 | -10...+80 | 70 000 / 22 500 | 117 500 | ① |
| 3956 L | 31 | 18.2 | **230** | **50** | 24 | 3.8 | ■ | 6.0 | 1 550 | -40...+80 | 70 000 / 22 500 | 117 500 | ① |
| 3950 M | 45 | 26.5 | **230** | **50** | 29 | 4.2 | □ | 6.0 | 2 150 | -10...+80 | 70 000 / 22 500 | 117 500 | ② |
| 3956 M | 45 | 26.5 | **230** | **50** | 29 | 4.2 | ■ | 6.0 | 2 150 | -40...+80 | 70 000 / 22 500 | 117 500 | ② |
| 3950 | 59 | 34.7 | **230** | **50** | 35 | 4.7 | □ | 11.0 | 2 650 | -20...+80 | 55 000 / 17 500 | 92 500 | ③ |
| 3956 | 59 | 34.7 | **230** | **50** | 35 | 4.7 | ■ | 11.0 | 2 650 | -40...+80 | 55 000 / 17 500 | 92 500 | ③ |
| 3900 L | 39 | 23.0 | **115** | **60** | 27 | 4.0 | □ | 5.0 | 1 850 | -10...+80 | 70 000 / 22 500 | 117 500 | ④ |
| 3906 L | 39 | 23.0 | **115** | **60** | 27 | 4.0 | ■ | 5.0 | 1 850 | -40...+80 | 70 000 / 22 500 | 117 500 | ④ |
| 3900 M | 53 | 31.2 | **115** | **60** | 34 | 4.6 | □ | 5.0 | 2 600 | -10...+80 | 70 000 / 22 500 | 117 500 | ⑤ |
| 3906 M | 53 | 31.2 | **115** | **60** | 34 | 4.6 | ■ | 5.0 | 2 600 | -40...+80 | 70 000 / 22 500 | 117 500 | ⑤ |
| 3900 | 70 | 41.2 | **115** | **60** | 40 | 5.1 | □ | 9.0 | 3 150 | -20...+80 | 60 000 / 20 000 | 102 500 | ⑥ |
| 3906 | 70 | 41.2 | **115** | **60** | 40 | 5.1 | ■ | 9.0 | 3 150 | -40...+80 | 60 000 / 20 000 | 102 500 | ⑥ |

Subject to change

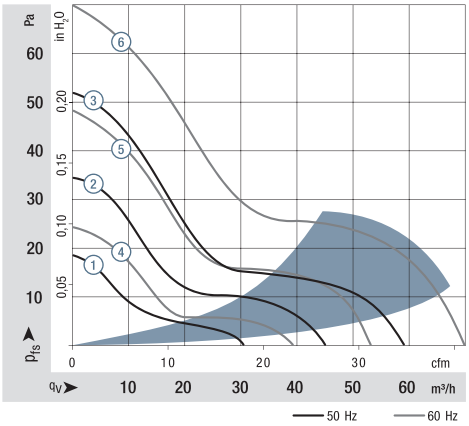


Air performance measured according to: ISO 5801.
Installation category A, without contact protection.
Noise: Total sound power level $L_{WA}$ ISO 10302 measured on a hemisphere with a radius of 2 m.
Sound pressure level $L_{pA}$ measured at 1 m distance from fan axis.
The values given are applicable only under the specified measuring conditions and may differ depending on the installation conditions.
In the event of deviation from the standard configuration, the parameters must be checked after installation!
For detailed information see
http://www.ebmpapst.com/general conditions

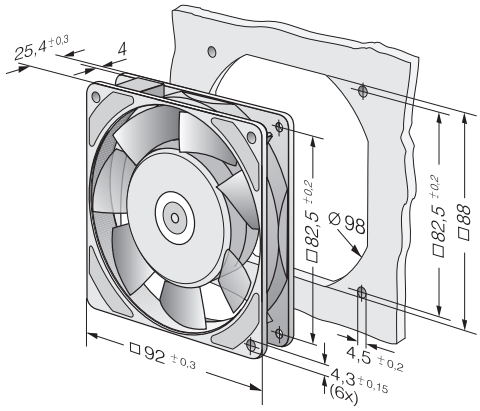

Max. 89 m³/h

# AC axial fans

☐ 92 x 38 mm



- **Material:** Housing: Die-cast aluminum
  Impeller: painted sheet steel
- **Direction of air flow:** Exhaust over struts
- **Direction of rotation:** Clockwise,
  looking towards rotor
- **Connection:** Via 2 single wires
  grounding lug for M4 x 8
- **Weight:** 420 g
- **Note:**
  Please note our ACmaxx series.
  With identical mounting dimensions and voltages, this series achieves greater energy efficiency.
  See page 197.

- **Possible special versions:**
  (See page 10)
  - Moisture protection
  - Salt spray protection
  - Degree of protection: IP 54 / IP 65

Series 3000
VWC0092AQHCS

| Nominal data | Air flow | Air flow | Nominal voltage | Frequency | Sound pressure level | Sound power level | Sintec sleeve bearings / Ball bearings | Power consumption | Nominal speed | Temperature range | Service life $L_{10}$ (40 °C) ebm-papst standard / Service life $L_{10}$ ($T_{max}$) ebm-papst standard | Life expectancy $L_{10IPC}$ (40 °C) see page 15 | Curve |
|---|---|---|---|---|---|---|---|---|---|---|---|---|---|
| **Type** | **m³/h** | **cfm** | **VAC** | **Hz** | **dB(A)** | **Bel(A)** | **□ / ■** | **Watts** | **rpm⁻¹** | **°C** | **Hours** | **Hours** | |
| 3850 | 49 | 28.8 | **230** | **50** | 24 | 3.7 | □ | 9.0 | 1 750 | -10...+75 | 60 000 / 25 000 | 102 500 | ① |
| 3856 | 54 | 31.8 | **230** | **50** | 26 | 3.9 | ■ | 9.0 | 1 950 | -40...+90 | 60 000 / 12 500 | 102 500 | ② |
| 3550 | 67 | 39.4 | **230** | **50** | 32 | 4.4 | □ | 8.5 | 2 300 | -10...+80 | 60 000 / 20 000 | 102 500 | ③ |
| 3556 | 67 | 39.4 | **230** | **50** | 33 | 4.5 | ■ | 8.5 | 2 400 | -40...+90 | 60 000 / 12 500 | 102 500 | ③ |
| 3650 | 75 | 44.1 | **230** | **50** | 36 | 4.8 | □ | 12.0 | 2 650 | -10...+55 | 52 500 / 37 500 | 87 500 | ④ |
| 3656 | 75 | 44.1 | **230** | **50** | 37 | 4.9 | ■ | 12.0 | 2 700 | -40...+75 | 52 500 / 20 000 | 87 500 | ④ |
| 3800 | 54 | 31.8 | **115** | **60** | 26 | 3.9 | □ | 8.0 | 1 900 | -10...+80 | 62 500 / 20 000 | 105 000 | ⑤ |
| 3806 | 60 | 35.3 | **115** | **60** | 29 | 4.2 | ■ | 8.0 | 2 150 | -40...+95 | 62 500 / 10 000 | 105 000 | ⑥ |
| 3500 | 73 | 43.0 | **115** | **60** | 35 | 4.6 | □ | 8.0 | 2 500 | -10...+80 | 62 500 / 20 000 | 105 000 | ⑦ |
| 3506 | 73 | 43.0 | **115** | **60** | 36 | 4.7 | ■ | 8.0 | 2 600 | -40...+95 | 62 500 / 10 000 | 105 000 | ⑦ |
| 3600 | 89 | 52.4 | **115** | **60** | 41 | 5.1 | □ | 11.0 | 3 100 | -10...+65 | 55 000 / 30 000 | 92 500 | ⑧ |
| 3606 | 89 | 52.4 | **115** | **60** | 42 | 5.2 | ■ | 11.0 | 3 200 | -40...+75 | 55 000 / 22 500 | 92 500 | ⑧ |

Subject to change

| Fan type | Length "L" | Connection wires |
|---|---|---|
| With sleeve bearings | 310 mm long | AWG 18, TR 64 |
| With ball bearings | 310 mm long | AWG 18 |

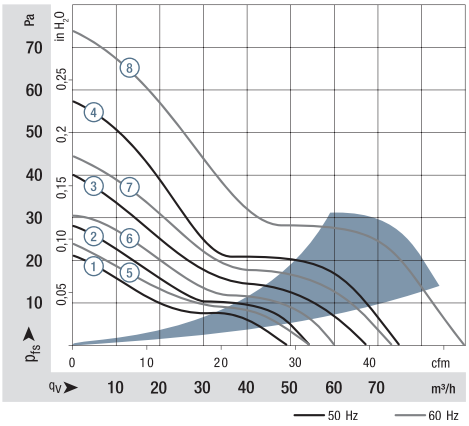


Air performance measured according to: ISO 5801.
Installation category A, without contact protection.
Noise: Total sound power level $L_{WA}$ ISO 10302 measured on a hemisphere with a radius of 2 m.
Sound pressure level $L_{pA}$ measured at 1 m distance from fan axis.
The values given are applicable only under the specified measuring conditions and may differ depending on the installation conditions.
In the event of deviation from the standard configuration, the parameters must be checked after installation!
For detailed information see
http://www.ebmpapst.com/general conditions

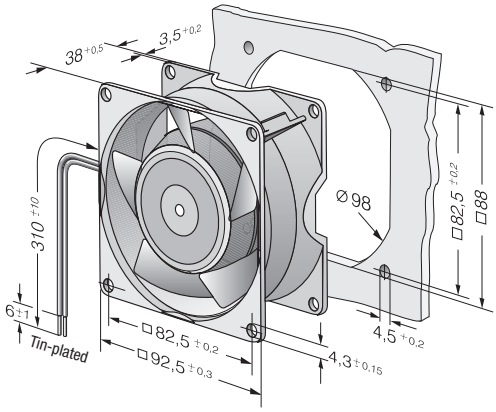

Max. 135 m³/h

# AC axial fans

☐ 119 x 25 mm



- **Material:** Housing: Die-cast aluminum
  Impeller: Mineral-reinforced PA plastic
- **Direction of air flow:** Exhaust over struts
- **Direction of rotation:** Counterclockwise, looking towards rotor
- **Connection:** Via 2 flat plugs 2.8 x 0.5 mm grounding lug for M4
- **Weight:** 320 g
- **Note:**
  Please note our ACmaxx series.
  With identical mounting dimensions and voltages, this series achieves greater energy efficiency.
  See page 198.

- **Possible special versions:**
  (See page 10)
  - Moisture protection

| Series 9900<br>VWC0119AQFBS<br>**Nominal data** | Air flow | Air flow | **Nominal voltage** | **Frequency** | Sound pressure level | Sound power level | Sintec sleeve bearings<br>Ball bearings | Power consumption | Nominal speed | Temperature range | Service life $L_{10}$ (40 °C)<br>ebm-papst standard<br>Service life $L_{10}$ ($T_{max}$)<br>ebm-papst standard | Life expectancy $L_{10IPC}$<br>(40 °C) see page 15 | Curve |
|---|---|---|---|---|---|---|---|---|---|---|---|---|---|
| **Type** | **m³/h** | **cfm** | **VAC** | **Hz** | **dB(A)** | **Bel(A)** | □ / ■ | **Watts** | **rpm⁻¹** | **°C** | **Hours** | **Hours** | |
| 9956 L | 84 | 49.4 | **230** | **50** | 29 | 4.4 | ■ | 9.5 | 1850 | -40...+80 | 57 500 / 17 500 | 97 500 | ① |
| 9956 M | 104 | 61.2 | **230** | **50** | 35 | 4.7 | ■ | 10.0 | 2250 | -40...+80 | 57 500 / 17 500 | 97 500 | ② |
| 9950 | 117 | 68.9 | **230** | **50** | 37 | 5.0 | □ | 14.0 | 2450 | -20...+70 | 47 500 / 25 000 | 80 000 | ③ |
| 9956 | 117 | 68.9 | **230** | **50** | 37 | 5.0 | ■ | 14.0 | 2450 | -40...+70 | 47 500 / 25 000 | 80 000 | ③ |
| 9906 L | 100 | 58.9 | **115** | **60** | 34 | 4.6 | ■ | 8.0 | 2100 | -40...+80 | 62 500 / 20 000 | 105 000 | ④ |
| 9906 M | 111 | 65.3 | **115** | **60** | 37 | 5.0 | ■ | 8.0 | 2450 | -40...+80 | 62 500 / 20 000 | 105 000 | ⑤ |
| 9900 | 135 | 79.5 | **115** | **60** | 42 | 5.4 | □ | 12.0 | 2850 | -20...+70 | 52 500 / 27 500 | 87 500 | ⑥ |
| 9906 | 135 | 79.5 | **115** | **60** | 42 | 5.4 | ■ | 12.0 | 2850 | -40...+70 | 52 500 / 27 500 | 87 500 | ⑥ |

Subject to change

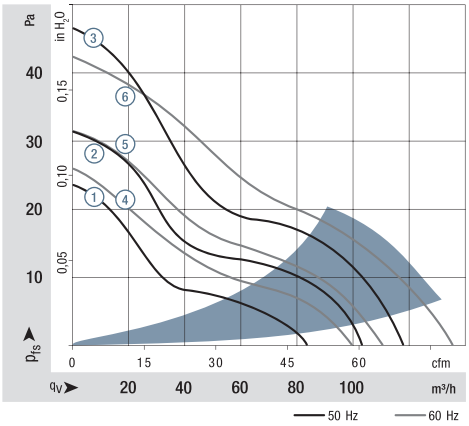


Air performance measured according to: ISO 5801.
Installation category A, without contact protection.
Noise: Total sound power level $L_{WA}$ ISO 10302 measured on a hemisphere with a radius of 2 m.
Sound pressure level $L_{pA}$ measured at 1 m distance from fan axis.
The values given are applicable only under the specified measuring conditions and may differ depending on the installation conditions.
In the event of deviation from the standard configuration, the parameters must be checked after installation!
For detailed information see
http://www.ebmpapst.com/general conditions

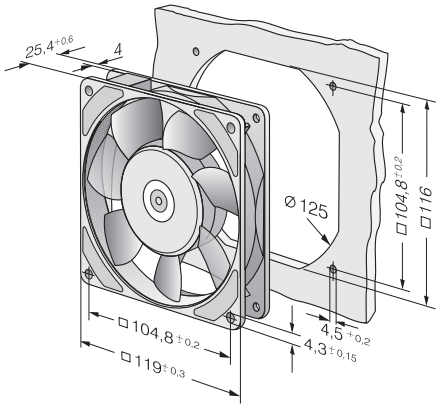




ebmpapst

# AC axial fans

## ☐ 119 x 38 mm



- **Material:** Housing: Die-cast aluminum
  Impeller: painted sheet steel
- **Direction of air flow:** Intake over struts
  Types 4890 N and 4840 N
  Exhaust over struts
- **Direction of rotation:** Clockwise,
  looking towards rotor
- **Connection:** Via 2 flat plugs 2.8 x 0.5 mm
  grounding lug for M4
- **Weight:** 550 g
- **Note:**
  Please note our ACmaxx series. With identical mounting dimensions and voltages, this series achieves greater energy efficiency. See from page 200.

- **Available as an option:**
  Versions with reinforced mounting flanges and exposed external single wires.

- **Possible special versions:**
  (See page 10)
  - Speed signal
  - Moisture protection
  - Salt spray protection
  - Degree of protection: IP 54 / IP 65

Series 4000 N
VUC0119XQHCS

| Nominal data | Air flow | Air flow | Nominal voltage | Frequency | Sound pressure level | Sound power level | Sintec sleeve bearings □ / Ball bearings ■ | Power consumption | Nominal speed | Temperature range | Service life $L_{10}$ (40 °C) ebm-papst standard / Service life $L_{10}$ ($T_{max}$) ebm-papst standard | Life expectancy $L_{10IPC}$ (40 °C) see page 15 | Curve |
|---|---|---|---|---|---|---|---|---|---|---|---|---|---|
| **Type** | **m³/h** | **cfm** | **VAC** | **Hz** | **dB(A)** | **Bel(A)** | **□ / ■** | **Watts** | **rpm⁻¹** | **°C** | **Hours** | **Hours** | |
| 4890 N | 80 | 47.0 | **230** | **50** | 25 | 4.0 | □ | 11.0 | 1 550 | -10...+70 | 55 000 / 27 500 | 92 500 | ① |
| 4850 N* | 100 | 58.8 | **230** | **50** | 32 | 4.4 | □ | 10.0 | 1 800 | -10...+70 | 57 500 / 30 000 | 97 500 | ② |
| 4580 N* | 123 | 72.3 | **230** | **50** | 41 | 5.2 | □ | 18.0 | 2 350 | -10...+55 | 40 000 / 27 500 | 67 500 | ③ |
| 4550 N* | 145 | 85.2 | **230** | **50** | 44 | 5.4 | □ | 16.5 | 2 550 | -10...+55 | 42 500 / 30 000 | 72 500 | ④ |
| 4650 N | 160 | 94.1 | **230** | **50** | 46 | 5.4 | □ | 19.0 | 2 650 | -10...+55 | 37 500 / 27 500 | 62 500 | ⑤ |
| 4656 N | 160 | 94.1 | **230** | **50** | 47 | 5.5 | ■ | 19.0 | 2 650 | -40...+85 | 37 500 / 10 000 | 62 500 | ⑤ |
| 4840 N | 85 | 50.0 | **115** | **60** | 26 | 4.1 | □ | 10.0 | 1 650 | -10...+75 | 57 500 / 22 500 | 97 500 | ⑥ |
| 4800 N* | 97 | 57.0 | **115** | **60** | 32 | 4.3 | □ | 9.0 | 1 750 | -10...+75 | 60 000 / 25 000 | 102 500 | ⑦ |
| 4530 N* | 151 | 88.8 | **115** | **60** | 45 | 5.4 | □ | 16.0 | 2 700 | -10...+65 | 42 500 / 25 000 | 72 500 | ⑧ |
| 4500 N* | 169 | 100 | **115** | **60** | 48 | 5.7 | □ | 15.0 | 3 000 | -10...+65 | 47 500 / 27 500 | 80 000 | ⑨ |
| 4600 N | 180 | 106 | **115** | **60** | 50 | 5.7 | □ | 18.0 | 3 100 | -10...+60 | 40 000 / 25 000 | 67 500 | ⑩ |
| 4606 N | 180 | 106 | **115** | **60** | 51 | 5.8 | ■ | 18.0 | 3 100 | -40...+90 | 40 000 / 8 000 | 67 500 | ⑩ |

Subject to change

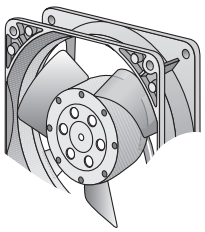

* Fan with 3 blades.

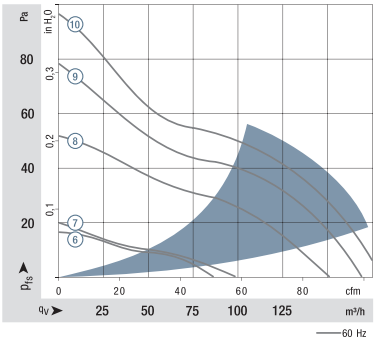


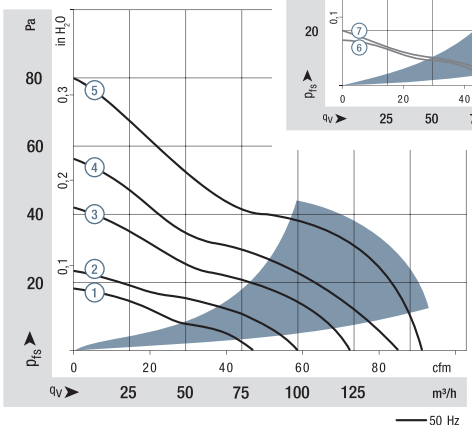


Air performance measured according to: ISO 5801.
Installation category A, without contact protection.
Noise: Total sound power level $L_{WA}$ ISO 10302 measured on a hemisphere with a radius of 2 m.
Sound pressure level $L_{pA}$ measured at 1 m distance from fan axis.
The values given are applicable only under the specified measuring conditions and may differ depending on the installation conditions.
In the event of deviation from the standard configuration, the parameters must be checked after installation!
For detailed information see
http://www.ebmpapst.com/general conditions

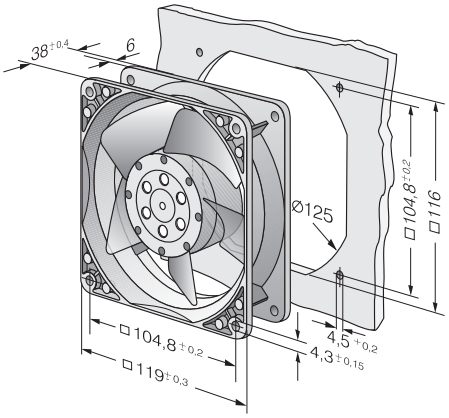

Max. 180 m³/h

# AC axial fans

☐ 119 x 38 mm



- **Material:** Housing: Die-cast aluminum
  Impeller: painted sheet steel
- **Direction of air flow:** Exhaust over struts
- **Direction of rotation:** Clockwise,
  looking towards rotor
- **Connection:** Via 2 flat plugs 2.8 x 0.5 mm
  grounding lug for M4 x 8
- **Weight:** 540 g
- **Note:**
  Please note our ACmaxx series.
  With identical mounting dimensions and voltages, this series achieves greater energy efficiency.
  See from page 200.

- **Possible special versions:**
  (See page 10)
  - Speed signal
  - Moisture protection
  - Salt spray protection
  - Degree of protection: IP 54 / IP 65

Series 4000 Z
VWC0119XQHCS

| Nominal data | Air flow | Air flow | Nominal voltage | Frequency | Sound pressure level | Sound power level | Sintec sleeve bearings / Ball bearings | Power consumption | Nominal speed | Temperature range | Service life $L_{10}$ (40 °C) ebm-papst standard / Service life $L_{10}$ ($T_{max}$) ebm-papst standard | Life expectancy $L_{10IPC}$ (40 °C) see page 15 | Curve |
|---|---|---|---|---|---|---|---|---|---|---|---|---|---|
| **Type** | **m³/h** | **cfm** | **VAC** | **Hz** | **dB(A)** | **Bel(A)** | □ / ■ | **Watts** | **rpm⁻¹** | **°C** | **Hours** | **Hours** | |
| 4850 Z | 100 | 58.8 | **230** | **50** | 26 | 4.0 | □ | 13.0 | 1 700 | -10...+65 | 50 000 / 27 500 | 85 000 | ① |
| 4856 Z | 100 | 58.8 | **230** | **50** | 26 | 4.0 | ■ | 13.0 | 1 700 | -40...+75 | 50 000 / 20 000 | 85 000 | ① |
| 4580 Z | 115 | 67.6 | **230** | **50** | 30 | 4.3 | □ | 13.0 | 1 900 | -10...+65 | 50 000 / 27 500 | 85 000 | ② |
| 4586 Z | 115 | 67.6 | **230** | **50** | 30 | 4.3 | ■ | 13.0 | 1 900 | -40...+75 | 50 000 / 20 000 | 85 000 | ② |
| 4650 Z | 160 | 94.1 | **230** | **50** | 40 | 5.3 | □ | 19.0 | 2 650 | -10...+50 | 37 500 / 30 000 | 62 500 | ③ |
| 4656 Z | 160 | 94.1 | **230** | **50** | 40 | 5.3 | ■ | 19.0 | 2 650 | -40...+75 | 37 500 / 15 000 | 62 500 | ③ |
| 4800 Z | 105 | 61.7 | **115** | **60** | 28 | 4.1 | □ | 12.0 | 1 800 | -10...+70 | 52 500 / 27 500 | 87 500 | ④ |
| 4806 Z | 105 | 61.7 | **115** | **60** | 28 | 4.1 | ■ | 12.0 | 1 800 | -40...+75 | 52 500 / 20 000 | 87 500 | ④ |
| 4536 Z | 120 | 70.5 | **115** | **60** | 32 | 4.4 | ■ | 12.0 | 2 000 | -40...+75 | 52 500 / 20 000 | 87 500 | ⑤ |
| 4600 Z | 180 | 106 | **115** | **60** | 45 | 5.6 | □ | 18.0 | 3 100 | -10...+60 | 40 000 / 25 000 | 67 500 | ⑥ |
| 4606 Z | 180 | 106 | **115** | **60** | 45 | 5.6 | ■ | 18.0 | 3 100 | -40...+85 | 40 000 / 10 000 | 67 500 | ⑥ |

Subject to change

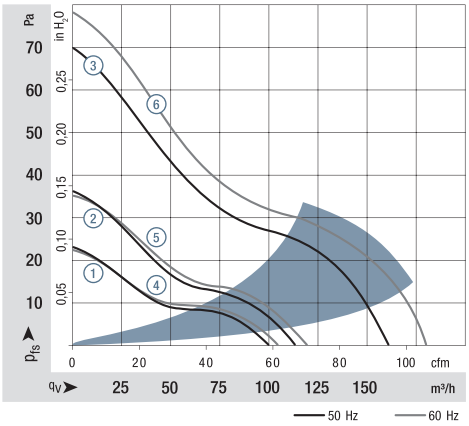


Air performance measured according to: ISO 5801.
Installation category A, without contact protection.
Noise: Total sound power level $L_{WA}$ ISO 10302 measured on a hemisphere with a radius of 2 m.
Sound pressure level $L_{pA}$ measured at 1 m distance from fan axis.
The values given are applicable only under the specified measuring conditions and may differ depending on the installation conditions.
In the event of deviation from the standard configuration, the parameters must be checked after installation!
For detailed information see
http://www.ebmpapst.com/general conditions

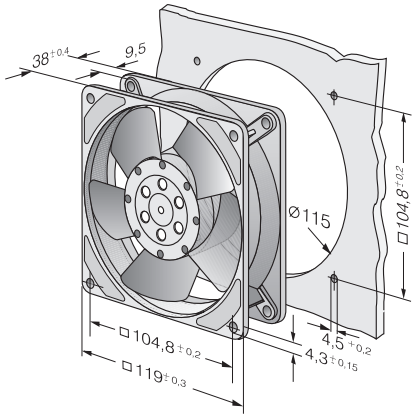




ebmpapst

Max. 140 m³/h

# AC axial fans

## Ø 108 x 37 mm



- **Material:** Impeller: Die-cast aluminum
  Mounting bracket: Metal
- **Direction of air flow:** Exhaust over mounting bracket
- **Direction of rotation:** Clockwise,
  looking towards rotor
- **Connection:** Via 2 single wires
- **Weight:** 430 g

- **Possible special versions:**
  (See page 10)
  - Moisture protection
  - Salt spray protection
  - Degree of protection: IP 54 / IP 65

Series 4600 TZ
VVY0108XQHCS

**Nominal data**

| Type | Air flow | Air flow | Nominal voltage | Frequency | Sound pressure level | Sintec sleeve bearings / Ball bearings | Power consumption | Nominal speed | Temperature range | Service life $L_{10}$ (40 °C) ebm-papst standard | Service life $L_{10}$ ($T_{max}$) ebm-papst standard | Life expectancy $L_{10IPC}$ (40 °C) see page 15 |
|---|---|---|---|---|---|---|---|---|---|---|---|---|
| | m³/h | cfm | VAC | Hz | dB(A) | □ / ■ | Watts | rpm⁻¹ | °C | Hours | | Hours |
| 4650 TZ | 125 | 73.6 | **230** | **50** | 42 | □ | 19.0 | 2 600 | -10...+50 | 37 500 / 30 000 | | 62 500 |
| 4656 TZ | 125 | 73.6 | **230** | **50** | 42 | ■ | 19.0 | 2 600 | -40...+65 | 37 500 / 20 000 | | 62 500 |
| 4600 TZ | 140 | 82.4 | **115** | **60** | 45 | □ | 18.0 | 2 950 | -10...+50 | 40 000 / 32 500 | | 67 500 |
| 4606 TZ | 140 | 82.4 | **115** | **60** | 45 | ■ | 18.0 | 2 950 | -40...+75 | 40 000 / 15 000 | | 67 500 |

Subject to change

The air flow and sound level of fans without external housing depends on the installation conditions.
The stated air flow and noise have been measured with an orifice 109 mm Ø at a distance of approx. 17 mm from the mounting bracket.
The air flow capacity of fan series 4000 Z is achievable because of the exceptionally favorable installation conditions. The noise in the optimal operating range can be measured for these fans only in a specific application.

| Fan type | | Connection wires |
|---|---|---|
| 4650 TZ | 4600 TZ | AWG 22, TR 32 |
| 4656 TZ | 4606 TZ | AWG 18 |

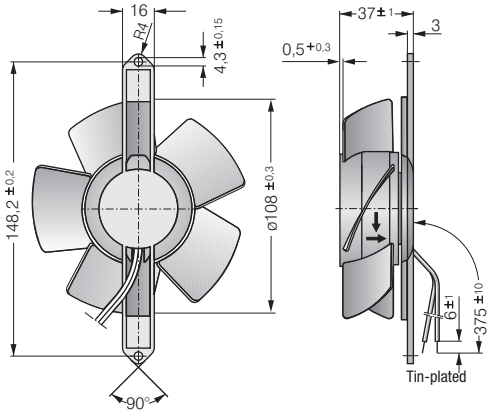

Max. 206 m³/h

# AC axial fans

☐ 127 x 38 mm



- **Material:** Housing: Die-cast aluminum
  Impeller: GRP[1)] (PA)
- **Direction of air flow:** Exhaust over struts
- **Direction of rotation:** Counterclockwise, looking towards rotor
- **Connection:** Via 2 flat plugs 2.8 x 0.8 mm grounding lug for M4 x 6
- **Weight:** 570 g

- **Possible special versions:**
  (See page 10)
  - Moisture protection

1) Fiberglass-reinforced plastic

Series 5900
VWC0127AQGDS

**Nominal data**

| Type | Air flow m³/h | Air flow cfm | Nominal voltage VAC | Frequency Hz | Sound pressure level dB(A) | Sound power level Bel(A) | Sintec sleeve bearings □ / Ball bearings ■ | Power consumption Watts | Nominal speed rpm⁻¹ | Temperature range °C | Service life $L_{10}$ (40 °C) ebm-papst standard Hours | Service life $L_{10}$ ($T_{max}$) ebm-papst standard | Life expectancy $L_{10IPC}$ (40 °C) see page 15 Hours | Curve |
|---|---|---|---|---|---|---|---|---|---|---|---|---|---|---|
| 5988 | 150 | 88.2 | **230** | **50** | 37 | 4.9 | ■ | 13.0 | 2 250 | -30...+55 | 35 000 / 25 000 | | 60 000 | ① |
| 5950 | 180 | 106 | **230** | **50** | 43 | 5.4 | □ | 18.0 | 2 700 | -20...+50 | 40 000 / 32 500 | | 67 500 | ③ |
| 5958 | 180 | 106 | **230** | **50** | 44 | 5.5 | ■ | 18.0 | 2 750 | -30...+60 | 40 000 / 25 000 | | 67 500 | ③ |
| 5938 | 162 | 95.2 | **115** | **60** | 40 | 4.9 | ■ | 12.0 | 2 500 | -30...+55 | 35 000 / 25 000 | | 60 000 | ② |
| 5900 | 206 | 121 | **115** | **60** | 46 | 5.7 | □ | 17.0 | 3 050 | -20...+55 | 42 500 / 30 000 | | 72 500 | ④ |
| 5908 | 206 | 121 | **115** | **60** | 47 | 5.8 | ■ | 17.0 | 3 100 | -30...+75 | 42 500 / 17 500 | | 72 500 | ④ |

Subject to change

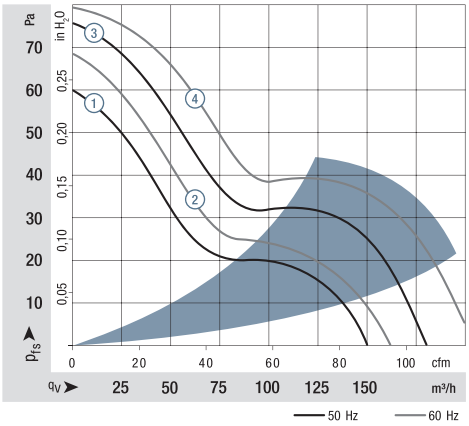


Air performance measured according to: ISO 5801.
Installation category A, without contact protection.
Noise: Total sound power level $L_{WA}$ ISO 10302 measured on a hemisphere with a radius of 2 m.
Sound pressure level $L_{pA}$ measured at 1 m distance from fan axis.
The values given are applicable only under the specified measuring conditions and may differ depending on the installation conditions.
In the event of deviation from the standard configuration, the parameters must be checked after installation!
For detailed information see
http://www.ebmpapst.com/general conditions

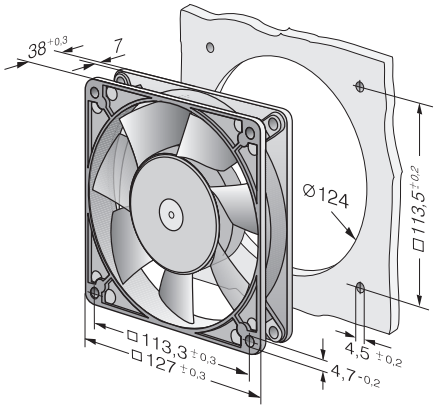




ebmpapst

Max. 270 m³/h

# AC axial fans

☐ 135 x 38 mm



- **Material:** Housing: Die-cast aluminum
  Impeller: painted sheet steel
- **Direction of air flow:** Exhaust over struts
- **Direction of rotation:** Counterclockwise, looking towards rotor
- **Connection:** Via 2 flat plugs 2.8 x 0.5 mm grounding lug for M4 x 8
- **Weight:** 800 g

- **Possible special versions:**
  (See page 10)
  - Moisture protection
  - Salt spray protection
  - Degree of protection: IP 54

Series 5600
VWC0135AQKCS

| Nominal data | Air flow | Air flow | Nominal voltage | Frequency | Sound pressure level | Sound power level | Sintec sleeve bearings / Ball bearings | Power consumption | Nominal speed | Temperature range | Service life $L_{10}$ (40 °C) ebm-papst standard | Service life $L_{10}$ ($T_{max}$) ebm-papst standard | Life expectancy $L_{10IPC}$ (40 °C) see page 15 | Curve |
|---|---|---|---|---|---|---|---|---|---|---|---|---|---|---|
| **Type** | **m³/h** | **cfm** | **VAC** | **Hz** | **dB(A)** | **Bel(A)** | **□ / ■** | **Watts** | **rpm⁻¹** | **°C** | **Hours** | | **Hours** | |
| 5656 S | 235 | 138 | **230** | **50** | 46 | 5.9 | ■ | 30.0 | 2 700 | -35...+70 | 45 000 / 22 500 | | 75 000 | ① |
| 5606 S | 270 | 159 | **115** | **60** | 50 | 6.2 | ■ | 26.0 | 3 100 | -35...+80 | 47 500 / 15 000 | | 80 000 | ② |

Subject to change

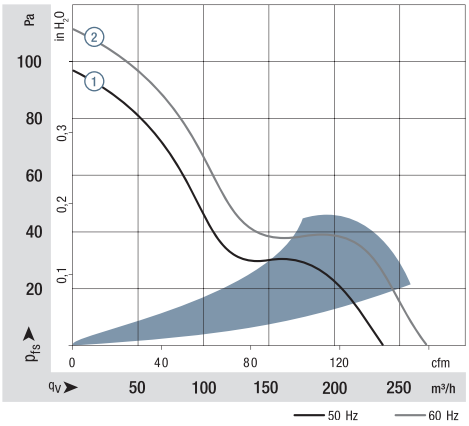


Air performance measured according to: ISO 5801.
Installation category A, without contact protection.
Noise: Total sound power level $L_{WA}$ ISO 10302 measured on a hemisphere with a radius of 2 m.
Sound pressure level $L_{pA}$ measured at 1 m distance from fan axis.
The values given are applicable only under the specified measuring conditions and may differ depending on the installation conditions.
In the event of deviation from the standard configuration, the parameters must be checked after installation!
For detailed information see
http://www.ebmpapst.com/general conditions

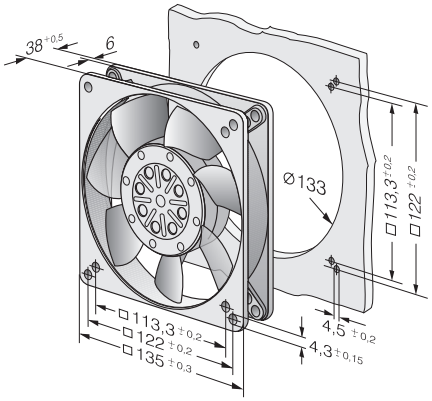

Max. 380 m³/h

# AC axial fans

## 150 x 172 x 38 mm



- **Material:** Housing: Die-cast aluminum
  Impeller: painted sheet steel
- **Direction of air flow:** Exhaust over struts
- **Direction of rotation:** Counterclockwise, looking towards rotor
- **Connection:** Via 2 flat plugs 2.8 x 0.5 mm
  grounding lug for M4 x 8
- **Weight:** 900 g
- **Note:**
  Please note our ACmaxx series.
  With identical mounting dimensions and voltages, this series achieves greater energy efficiency.
  See page 202.

| VWT0142X2LBS<br>**Nominal data** | Air flow | Air flow | **Nominal voltage** | **Frequency** | Sound pressure level | Sound power level | Sintec sleeve bearings<br>Ball bearings | Power consumption | Nominal speed | Temperature range | Service life $L_{10}$ (40 °C)<br>ebm-papst standard<br>Service life $L_{10}$ ($T_{max}$)<br>ebm-papst standard | Life expectancy $L_{10IPC}$<br>(40 °C) see page 15 | Curve |
|---|---|---|---|---|---|---|---|---|---|---|---|---|---|
| **Type** | **m³/h** | **cfm** | **VAC** | **Hz** | **dB(A)** | **Bel(A)** | □/■ | **Watts** | **rpm⁻¹** | **°C** | **Hours** | **Hours** | |
| W2E 142-BB01-01 | 320 | 188 | **230** | **50** | 51 | 6.4 | ■ | 27.0 | 2 800 | -25...+55 | 60 000 / 42 500 | 102 500 | ① |
| W2E 142-BB05-01 | 380 | 224 | **115** | **60** | 56 | 6.8 | ■ | 28.0 | 3 350 | -25...+65 | 55 000 / 30 000 | 92 500 | ② |

Subject to change

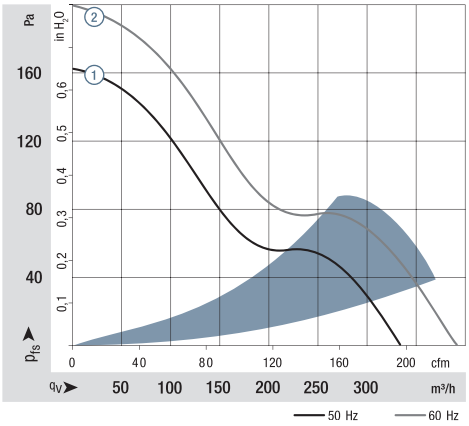


Air performance measured according to: ISO 5801.
Installation category A, without contact protection.
Noise: Total sound power level $L_{WA}$ ISO 10302 measured on a hemisphere with a radius of 2 m.
Sound pressure level $L_{pA}$ measured at 1 m distance from fan axis.
The values given are applicable only under the specified measuring conditions and may differ depending on the installation conditions.
In the event of deviation from the standard configuration, the parametersmust be checked after installation!
For detailed information see
http://www.ebmpapst.com/general conditions

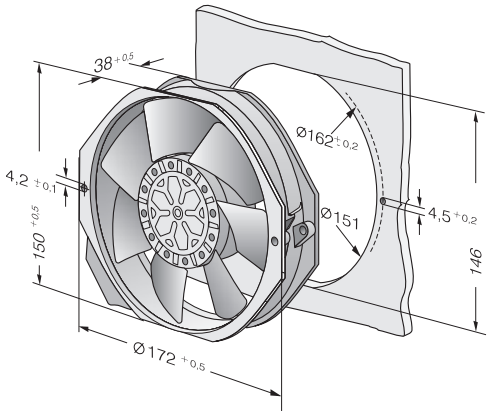




ebmpapst

Max. 380 m³/h

# AC axial fans

## Ø 150 x 55 mm



- **Material:** Housing: Die-cast aluminum
  Impeller: painted sheet steel
- **Direction of air flow:** Exhaust over struts
- **Direction of rotation:** Counterclockwise, looking towards rotor
- **Connection:** Via 2 single wires
  wire ends with wire end splices
  grounding lug for M4 x 8
- **Weight:** 1.1 kg
- **Note:**
  Please note our ACmaxx series. With identical mounting dimensions and voltages, this series achieves greater energy efficiency. See page 202 and 204.

| VWS0130XQLDS<br>**Nominal data** | Air flow | Air flow | **Nominal voltage** | **Frequency** | Sound pressure level | Sound power level | Sintec sleeve bearings<br>Ball bearings | Power consumption | Nominal speed | Temperature range | Service life $L_{10}$ (40 °C)<br>ebm-papst standard<br>Service life $L_{10}$ ($T_{max}$)<br>ebm-papst standard | Life expectancy $L_{10IPC}$<br>(40 °C) see page 15 | Curve |
|---|---|---|---|---|---|---|---|---|---|---|---|---|---|
| **Type** | **m³/h** | **cfm** | **VAC** | **Hz** | **dB(A)** | **Bel(A)** | □/■ | **Watts** | **rpm⁻¹** | **°C** | **Hours** | **Hours** | |
| W2S 130-AA03-01 | 325 | 191 | **230** | **50** | 49 | 6.0 | ■ | 45.0 | 2 800 | -25...+50 | 60 000 / 47 500 | 102 500 | ① |
| W2S 130-AA03-97 | 325 | 191 | **230** | **50** | 49 | 6.0 | ■ | 45.0 | 2 800 | -25...+70 | 60 000 / 30 000 | 102 500 | ① |
| W2S 130-AA25-01 | 380 | 224 | **115** | **60** | 53 | 6.4 | ■ | 38.0 | 3 250 | -25...+70 | 60 000 / 30 000 | 102 500 | ② |
| W2S 130-AA25-97 | 380 | 224 | **115** | **60** | 53 | 6.4 | ■ | 38.0 | 3 250 | -25...+90 | 60 000 / 12 500 | 102 500 | ② |

Subject to change

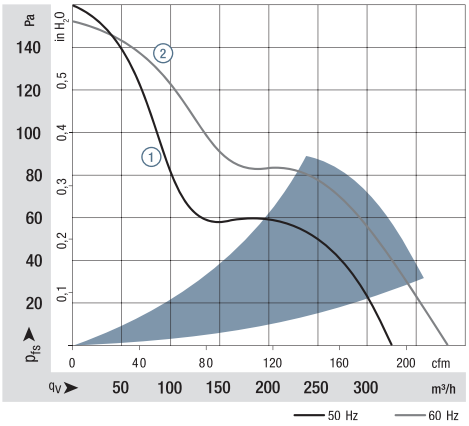


Air performance measured according to: ISO 5801.
Installation category A, without contact protection.
Noise: Total sound power level $L_{WA}$ ISO 10302 measured on a hemisphere with a radius of 2 m.
Sound pressure level $L_{pA}$ measured at 1 m distance from fan axis.
The values given are applicable only under the specified measuring conditions and may differ depending on the installation conditions.
In the event of deviation from the standard configuration, the parameters must be checked after installation!
For detailed information see
http://www.ebmpapst.com/general conditions

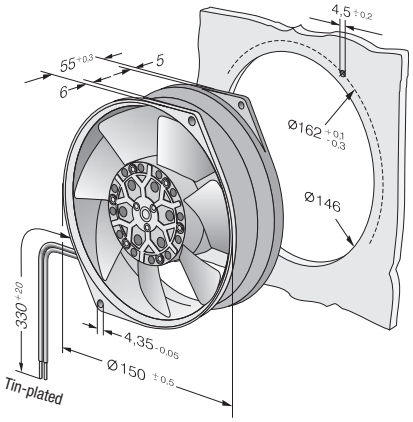

Max. 425 m³/h

# AC axial fans

## Ø 150 x 55 mm



- **Material:** Housing: Die-cast aluminum
  Impeller: painted sheet steel
- **Direction of air flow:** Intake over struts
- **Direction of rotation:** Counterclockwise, looking towards rotor
- **Connection:** Via 2 single wires
  wire ends with wire end splices
  grounding lug for M4 x 8
- **Weight:** 1.1 kg
- **Note:**
  Please note our ACmaxx series.
  With identical mounting dimensions and voltages, this series achieves greater energy efficiency.
  See page 202 and 204.

| VUS0130XQLDS<br>**Nominal data** | Air flow | Air flow | **Nominal voltage** | **Frequency** | Sound pressure level | Sound power level | Sintec sleeve bearings<br>Ball bearings | Power consumption | Nominal speed | Temperature range | Service life $L_{10}$ (40 °C)<br>ebm-papst standard<br>Service life $L_{10}$ ($T_{max}$)<br>ebm-papst standard | Life expectancy $L_{10IPC}$ (40 °C) see page 15 | Curve |
|---|---|---|---|---|---|---|---|---|---|---|---|---|---|
| **Type** | **m³/h** | **cfm** | **VAC** | **Hz** | **dB(A)** | **Bel(A)** | □/■ | **Watts** | **rpm⁻¹** | **°C** | **Hours** | **Hours** | |
| W2S 130-BM03-01 | 380 | 224 | **230** | **50** | 60 | 6.8 | ■ | 47.0 | 2 700 | -25...+50 | 65 000 / 52 500 | 110 000 | ① |
| W2S 130-BM15-01 | 425 | 250 | **115** | **60** | 62 | 6.9 | ■ | 46.0 | 3 050 | -25...+70 | 50 000 / 25 000 | 85 000 | ② |

Subject to change

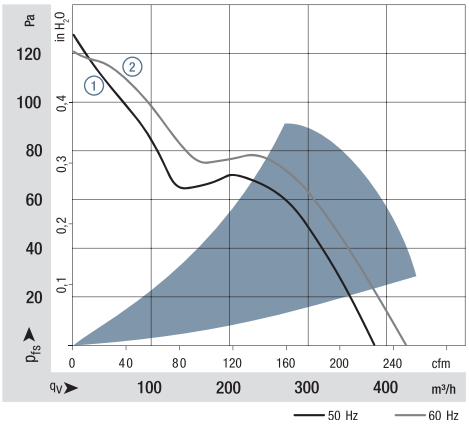


Air performance measured according to: ISO 5801.
Installation category A, without contact protection.
Noise: Total sound power level $L_{WA}$ ISO 10302 measured on a hemisphere with a radius of 2 m.
Sound pressure level $L_{pA}$ measured at 1 m distance from fan axis.
The values given are applicable only under the specified measuring conditions and may differ depending on the installation conditions.
In the event of deviation from the standard configuration, the parameters must be checked after installation!
For detailed information see
http://www.ebmpapst.com/general conditions

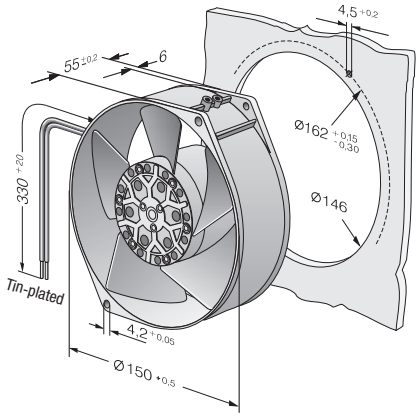




ebmpapst

Max. 500 m³/h

# AC axial fans

## Ø 172 x 51 mm



- **Material:** Housing: Die-cast aluminum
  Impeller: painted sheet steel
- **Direction of air flow:** Exhaust over struts
- **Direction of rotation:** Counterclockwise, looking towards rotor
- **Connection:** Via 2 flat plugs 2.8 x 0.5 mm grounding lug for M4 x 6
- **Weight:** 1.0 kg
- **Note:**
  Please note our ACmaxx series.
  With identical mounting dimensions and voltages, this series achieves greater energy efficiency.
  See pages 202.

| VWS0143X2LCS<br>**Nominal data** | Air flow | Air flow | **Nominal voltage** | **Frequency** | Sound pressure level | Sound power level | Sintec sleeve bearings<br>Ball bearings | Power consumption | Nominal speed | Temperature range | Service life $L_{10}$ (40 °C)<br>ebm-papst standard | Service life $L_{10}$ ($T_{max}$)<br>ebm-papst standard | Life expectancy $L_{10IPC}$<br>(40 °C) see page 15 | Curve |
|---|---|---|---|---|---|---|---|---|---|---|---|---|---|---|
| **Type** | **m³/h** | **cfm** | **VAC** | **Hz** | **dB(A)** | **Bel(A)** | □/■ | **Watts** | **rpm⁻¹** | **°C** | **Hours** | | **Hours** | |
| W2E 143-AA09-01 | 375 | 221 | **230** | **50** | 55 | 5.9 | ■ | 24.0 | 2 800 | -25...+70 | 62 500 / 32 500 | | 105 000 | ① |
| W2E 143-AB09-01 | 420 | 247 | **230** | **50** | 54 | 6.3 | ■ | 26.0 | 2 800 | -25...+60 | 62 500 / 40 000 | | 105 000 | ② |
| W2E 143-AA15-01 | 440 | 259 | **115** | **60** | 60 | 6.4 | ■ | 26.0 | 3 300 | -25...+70 | 57 000 / 30 000 | | 97 500 | ③ |
| W2E 143-AB15-01 | 500 | 284 | **115** | **60** | 58 | 6.7 | ■ | 29.0 | 3 300 | -25...+75 | 57 000 / 22 500 | | 97 500 | ④ |

Subject to change

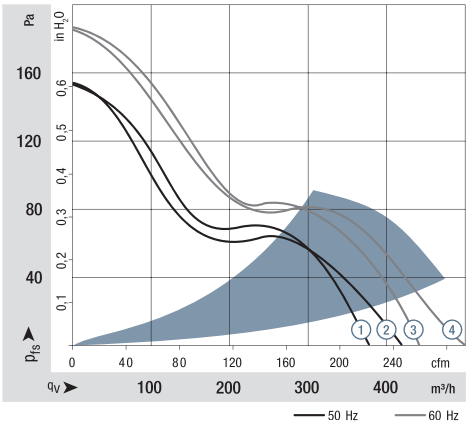


Air performance measured according to: ISO 5801.
Installation category A, without contact protection.
Noise: Total sound power level $L_{WA}$ ISO 10302 measured on a hemisphere with a radius of 2 m.
Sound pressure level $L_{pA}$ measured at 1 m distance from fan axis.
The values given are applicable only under the specified measuring conditions and may differ depending on the installation conditions.
In the event of deviation from the standard configuration, the parameters must be checked after installation!
For detailed information see
http://www.ebmpapst.com/general conditions

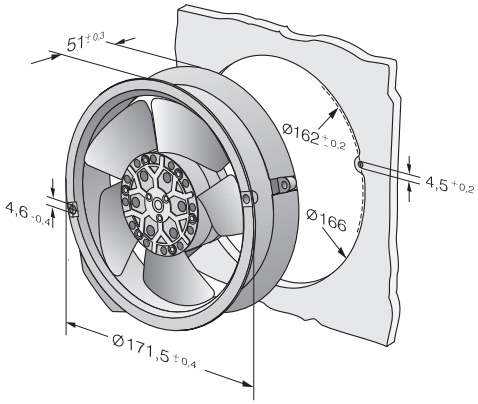

Max. 1000 m³/h

# AC axial fans

☐ 225 x 80 mm



- **Material:** Housing: Die-cast-aluminum<br>Impeller: Sheet steel, painted black<br>Rotor: Painted black
- **Number of blades:** 7
- **Direction of air flow:** "V"
- **Direction of rotation:** Counterclockwise, looking towards rotor
- **Degree of protection:** IP 44, depending on installation and position
- **Insulation class:** "B"
- **Installation position:** Any
- **Condensation drainage holes:** None
- **Mode of operation:** Continuous operation (S1)
- **Bearings:** Maintenance-free ball bearings

VWT0200X2MCS

**Nominal data**

| Type | Motor | Curve | Nominal voltage | Frequency | Air flow | Nominal speed | Power consumption | Input current | Capacitor | Sound power level | Max. back-pressure | Admissible amb. temp. | Weight | Connection diagram |
|---|---|---|---|---|---|---|---|---|---|---|---|---|---|---|
| | | | VAC | Hz | m³/h | rpm⁻¹ | W | A | F/VDB | dB(A) | Pa | °C | kg | |
| W2E 200-HK86-01 | M2E 068-BF | Ⓐ | 1~115 | 50 | 880 | 2550 | 64 | 0.58 | 5.0/220 | —- | 80 | -25...+60 | 2.0 | P. 280 / A1) |
| | | Ⓑ | 1~115 | 60 | 1000 | 2800 | 80 | 0.70 | 5.0/220 | —- | 95 | -25...+65 | 2.0 | |
| W2E 200-HK38-01 | M2E 068-BF | Ⓒ | 1~230 | 50 | 880 | 2550 | 64 | 0.29 | 1.5/450 | —- | 80 | -25...+60 | 2.1 | P. 280 / A1) |
| | | Ⓓ | 1~230 | 60 | 1000 | 2800 | 80 | 0.35 | 1.5/450 | —- | 95 | -25...+65 | 2.1 | |

Subject to change

**Curves:**

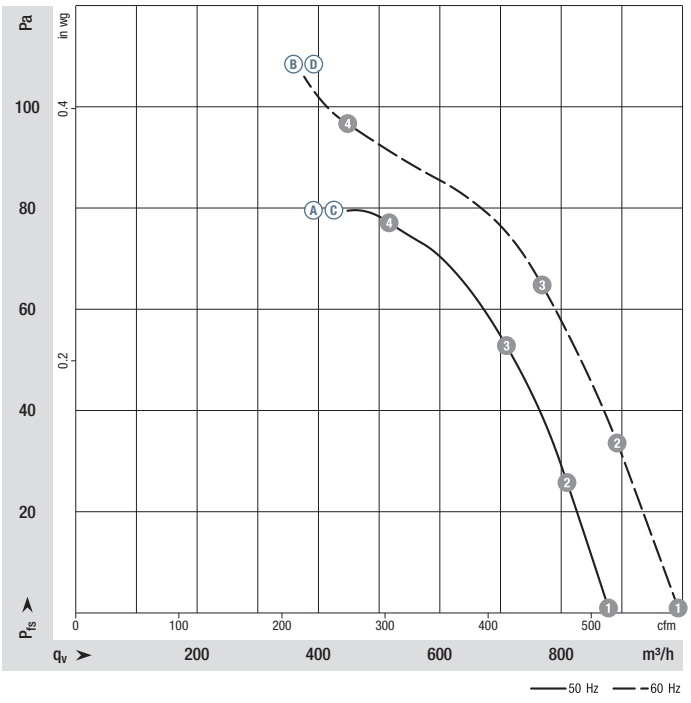


| | | n rpm⁻¹ | Ped W | I A | LWA dB(A) |
|---|---|---|---|---|---|
| Ⓐ | 1 | 2640 | 56 | 0.56 | —- |
| Ⓐ | 2 | 2595 | 58 | 0.57 | —- |
| Ⓐ | 3 | 2550 | 61 | 0.58 | —- |
| Ⓐ | 4 | 2480 | 64 | 0.60 | —- |
| Ⓑ | 1 | 2980 | 67 | 0.58 | —- |
| Ⓑ | 2 | 2880 | 71 | 0.62 | —- |
| Ⓑ | 3 | 2790 | 75 | 0.65 | —- |
| Ⓑ | 4 | 2660 | 80 | 0.69 | —- |
| Ⓒ | 1 | 2630 | 60 | 0.30 | —- |
| Ⓒ | 2 | 2585 | 64 | 0.31 | —- |
| Ⓒ | 3 | 2530 | 66 | 0.31 | —- |
| Ⓒ | 4 | 2480 | 69 | 0.32 | —- |
| Ⓓ | 1 | 3000 | 70 | 0.31 | —- |
| Ⓓ | 2 | 2935 | 73 | 0.32 | —- |
| Ⓓ | 3 | 2850 | 77 | 0.34 | —- |
| Ⓓ | 4 | 2705 | 83 | 0.36 | —- |

Air performance measured according to: ISO 5801, Installation category A. For detailed information on the measurement setup, contact ebmpapst. Suction-side noise levels: $L_{WA}$ according to ISO 13347, $L_{pA}$ measured at 1 m distance from fan axis. The values given are applicable only under the specified measuring conditions and may differ depending on the installation conditions. In the event of deviation from the standard configuration, the parameters must be checked after installation! For detailed information see http://www.ebmpapst.com/general conditions



ebmpapst

- **Motor protection:** Thermal overload protector (TOP) connected internally
- **Touch current:** < 0.75 mA acc. to IEC 60990 (test circuit, illustration 4)
- **Cable exit:** Variable
- **Electrical hookup:** Via terminal strips, capacitor connected
- **Protection class:** I (with customer connection to grounding conductor)
- **Conformity with standard(s):** EN 60335-1, CE
- **Approvals:** Ⓐ Ⓑ EAC, UL 507, VDE, CSA C22.2 no. 113, CCC
  Ⓒ Ⓓ EAC, UL 2111, VDE, CSA C22.2 no. 113, CCC

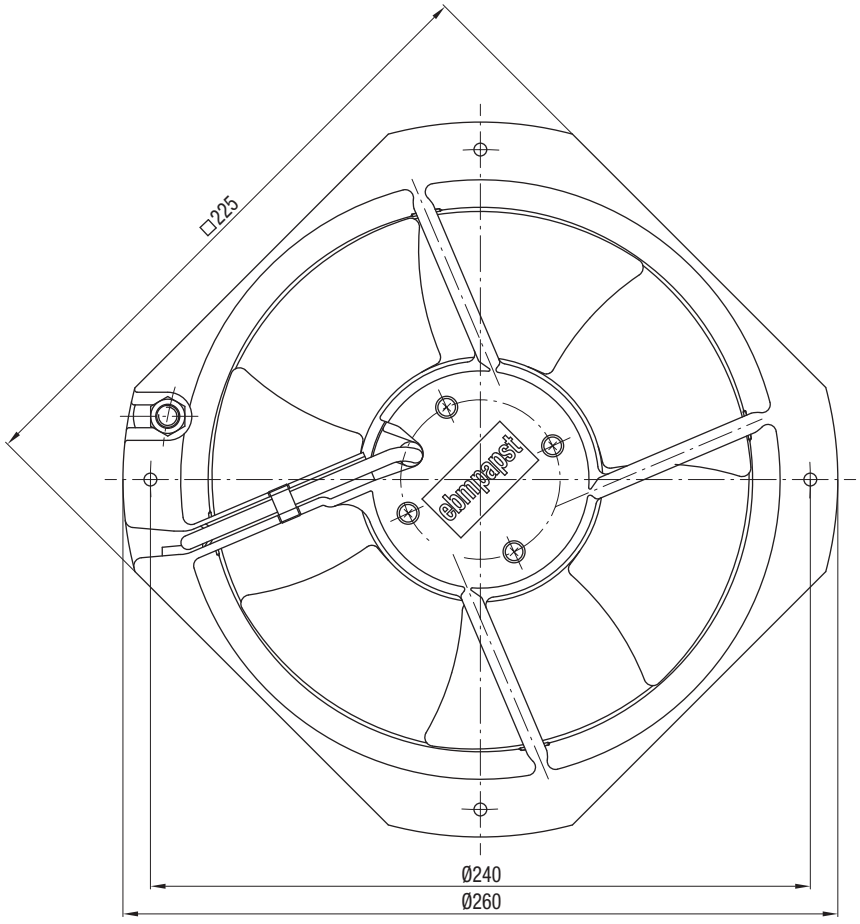


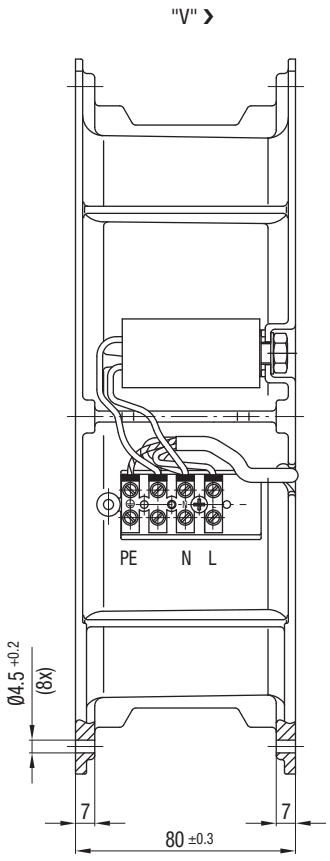

Max. 1880 m³/h

# AC axial fans

☐ 225 x 80 mm



- **Material:** Housing: Die-cast-aluminum<br>Impeller: PP plastic<br>Rotor: Painted black
- **Number of blades:** 7
- **Direction of air flow:** "V"
- **Direction of rotation:** Counterclockwise, looking towards rotor
- **Degree of protection:** IP 44, depending on installation and position
- **Insulation class:** "F"
- **Installation position:** Any
- **Condensation drainage holes:** None
- **Mode of operation:** Continuous operation (S1)
- **Bearings:** Maintenance-free ball bearings

VWT0250X2MES

**Nominal data**

| Type | Motor | Curve | Nominal voltage | Frequency | Air flow | Nominal speed | Max. power consumption (1) | Max. input current (1) | Capacitor | Sound power level | Max. back-pressure | Admissible amb. temp. | Weight | Connection diagram |
|---|---|---|---|---|---|---|---|---|---|---|---|---|---|---|
| | | | VAC | Hz | m³/h | rpm⁻¹ | W | A | µF/VDB | dB(A) | Pa | °C | kg | |
| W2E 250-HP08-01 | M2E 068-CF | Ⓐ | 1~115 | 50 | 1740 | 2375 | 125 | 1.10 | 12/320 | 70 | 100 | -25...+50 | 2.7 | P. 280 / A3) |
| | | Ⓑ | 1~115 | 60 | 1880 | 2350 | 165 | 1.45 | 12/320 | 72 | 110 | -25...+45 | 2.7 | |
| W2E 250-HP06-01 | M2E 068-CF | Ⓒ | 1~230 | 50 | 1695 | 2320 | 125 | 0.55 | 3.0/400 | 70 | 100 | -25...+60 | 2.7 | P. 280 / A3) |
| | | Ⓓ | 1~230 | 60 | 1840 | 2300 | 160 | 0.71 | 3.0/400 | 71 | 110 | -25...+50 | 2.7 | |

Subject to change

(1) Nominal data in operating point with maximum load and 115/230 VAC

**Curves:**

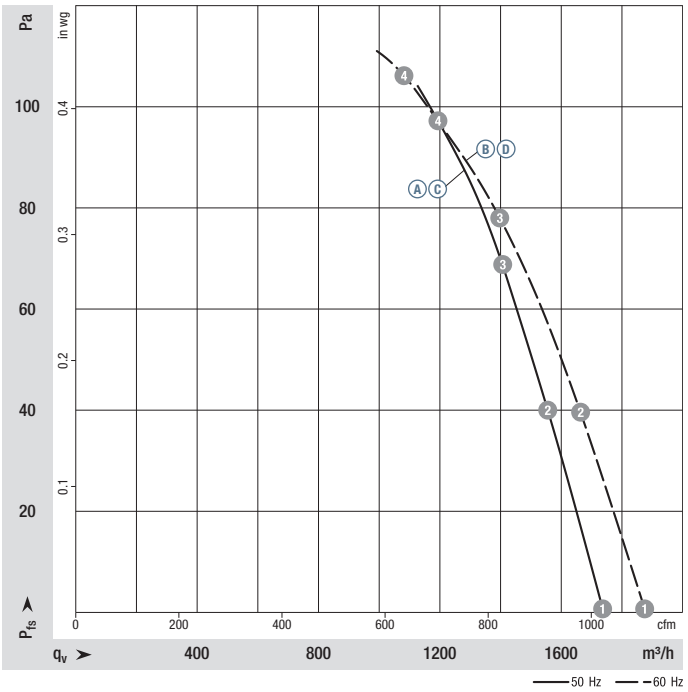


| | | n rpm⁻¹ | $P_{ed}$ W | I A | $L_WA$ dB(A) |
|---|---|---|---|---|---|
| Ⓐ | 1 | 2580 | 108 | 0.96 | 70 |
| Ⓐ | 2 | 2510 | 115 | 1.02 | 69 |
| Ⓐ | 3 | 2455 | 121 | 1.06 | 68 |
| Ⓐ | 4 | 2375 | 125 | 1.10 | 68 |
| Ⓑ | 1 | 2785 | 149 | 1.30 | 72 |
| Ⓑ | 2 | 2655 | 154 | 1.35 | 70 |
| Ⓑ | 3 | 2490 | 162 | 1.41 | 70 |
| Ⓑ | 4 | 2350 | 165 | 1.45 | 70 |
| Ⓒ | 1 | 2550 | 101 | 0.44 | 70 |
| Ⓒ | 2 | 2480 | 109 | 0.47 | 69 |
| Ⓒ | 3 | 2410 | 115 | 0.50 | 68 |
| Ⓒ | 4 | 2320 | 125 | 0.55 | 68 |
| Ⓓ | 1 | 2750 | 134 | 0.59 | 71 |
| Ⓓ | 2 | 2600 | 145 | 0.63 | 70 |
| Ⓓ | 3 | 2420 | 152 | 0.66 | 69 |
| Ⓓ | 4 | 2300 | 160 | 0.71 | 70 |

Air performance measured according to: ISO 5801, Installation category A. For detailed information on the measurement setup, contact ebmpapst. Suction-side noise levels: $L_WA$ according to ISO 13347, $L_pA$ measured at 1 m distance from fan axis. The values given are applicable only under the specified measuring conditions and may differ depending on the installation conditions. In the event of deviation from the standard configuration, the parameters must be checked after installation! For detailed information see http://www.ebmpapst.com/general conditions



ebmpapst

- **Motor protection:** Thermal overload protector (TOP) connected internally
- **Touch current:** < 0.75 mA acc. to IEC 60990 (test circuit, illustration 4)
- **Cable exit:** Variable
- **Electrical hookup:** Via terminal strips, capacitor connected
- **Protection class:** I (with customer connection to grounding conductor)
- **Conformity with standard(s):** EN 60335-1, CE
- **Approvals:** Ⓐ Ⓑ UL 2111, CSA C22.2 no. 77
  Ⓒ Ⓓ EAC, UL 2111, CSA C22.2 no. 77

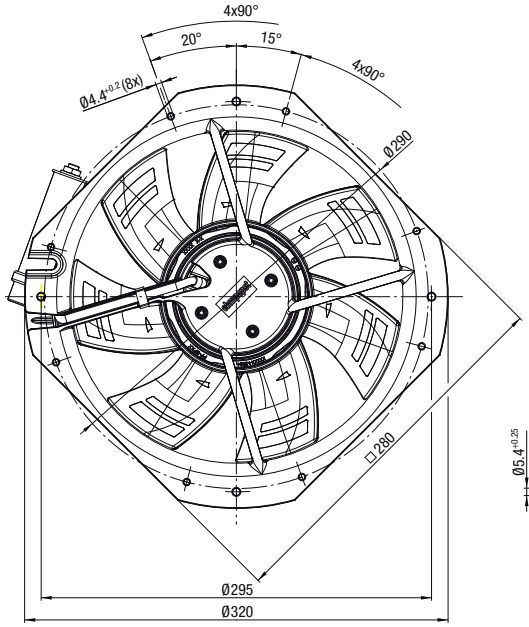


W2E 250-HP08-01

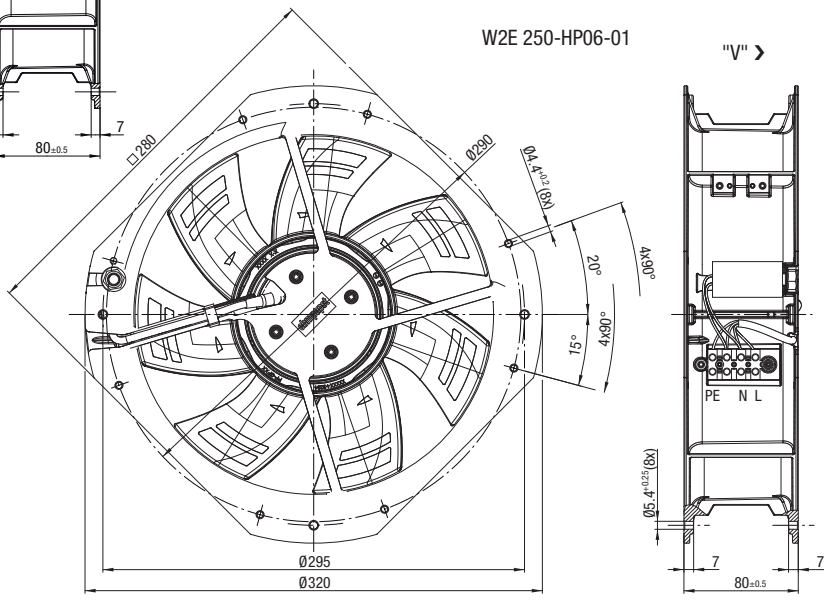

Max. 830 m³/h

# AC diagonal module

## Ø 200 mm



- **Material:** Housing: PA plastic<br>Support bracket: PA plastic<br>Impeller: PA plastic<br>Rotor: Painted black
- **Number of blades:** 7
- **Direction of air flow:** "V", single inlet
- **Direction of rotation:** Clockwise, looking towards rotor
- **Degree of protection:** IP 44, depending on installation and position
- **Insulation class:** "F"
- **Installation position:** Any
- **Condensation drainage holes:** None
- **Mode of operation:** Continuous operation (S1)
- **Bearings:** Maintenance-free ball bearings

VJH0200X2MES

**Nominal data**

| Type | Motor | Curve | Nominal voltage VAC | Frequency Hz | Air flow m³/h | Nominal speed rpm⁻¹ | Power consumption W | Input current A | Capacitor µF/VDB | Sound power level dB(A) | Max. back-pressure Pa | Admissible amb. temp. °C | Weight kg | Connection diagram |
|---|---|---|---|---|---|---|---|---|---|---|---|---|---|---|
| **K2E 200-AA12 -01** | M2E 068-CF | Ⓐ | 1~ 115 | 50 | 760 | 2650 | 64 | 0.56 | 6.0/250 | 70 | 200 | -25..+65 | 2.1 | P. 280 / A1) |
| | | Ⓑ | 1~ 115 | 60 | 830 | 2910 | 88 | 0.77 | 6.0/250 | 72 | 240 | -25..+65 | 2.1 | |

Subject to change

**Curves:**

50 Hz

60 Hz

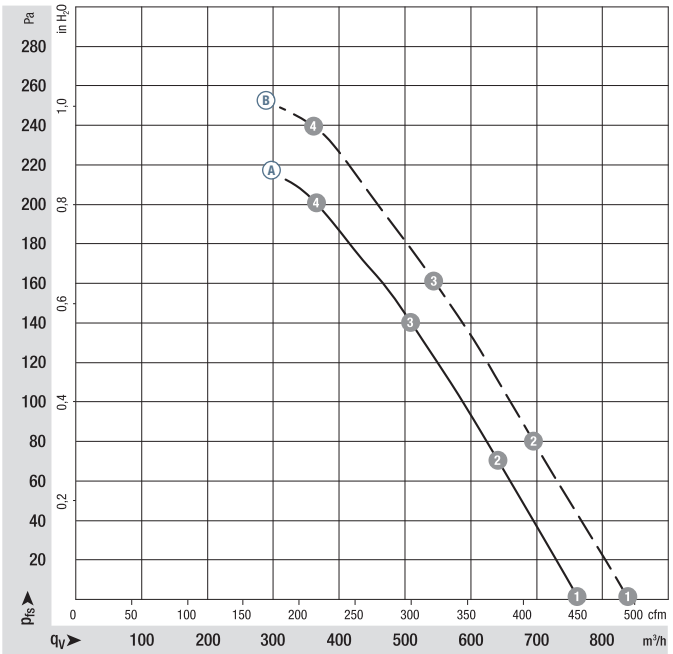


| | n rpm⁻¹ | $P_{ed}$ W | I A | $L_WA$ dB(A) |
|---|---|---|---|---|
| Ⓐ 1 | 2650 | 64 | 0.56 | 70 |
| Ⓐ 2 | 2610 | 67 | 0.59 | 68 |
| Ⓐ 3 | 2580 | 70 | 0.61 | 67 |
| Ⓐ 4 | 2590 | 69 | 0.61 | 69 |
| Ⓑ 1 | 2910 | 88 | 0.77 | 72 |
| Ⓑ 2 | 2815 | 93 | 0.81 | 69 |
| Ⓑ 3 | 2755 | 96 | 0.84 | 69 |
| Ⓑ 4 | 2780 | 95 | 0.83 | 71 |

Air performance measured according to: ISO 5801. Installation category A, without contact protection. Suction-side noise levels: $L_WA$ according to ISO 13347, $L_pA$ measured at 1 m distance from fan axis. The values given are applicable only under the specified measuring conditions and may differ depending on the installation conditions. In the event of deviation from the standard configuration, the parameters must be checked after installation! For detailed information see http://www.ebmpapst.com/general conditions



ebmpapst

- **Motor protection:** Thermal overload protector (TOP) connected internally
- **Touch current:** < 0.75 mA acc. to IEC 60990 (test circuit, illustration 4)
- **Cable exit:** Lateral
- **Electrical hookup** Via connector
- **Protection class:** I (with customer connection to grounding conductor)
- **Conformity with standard(s):** EN 60335-1, CE
- **Approvals:** UL 2111, CSA C22.2 no. 77

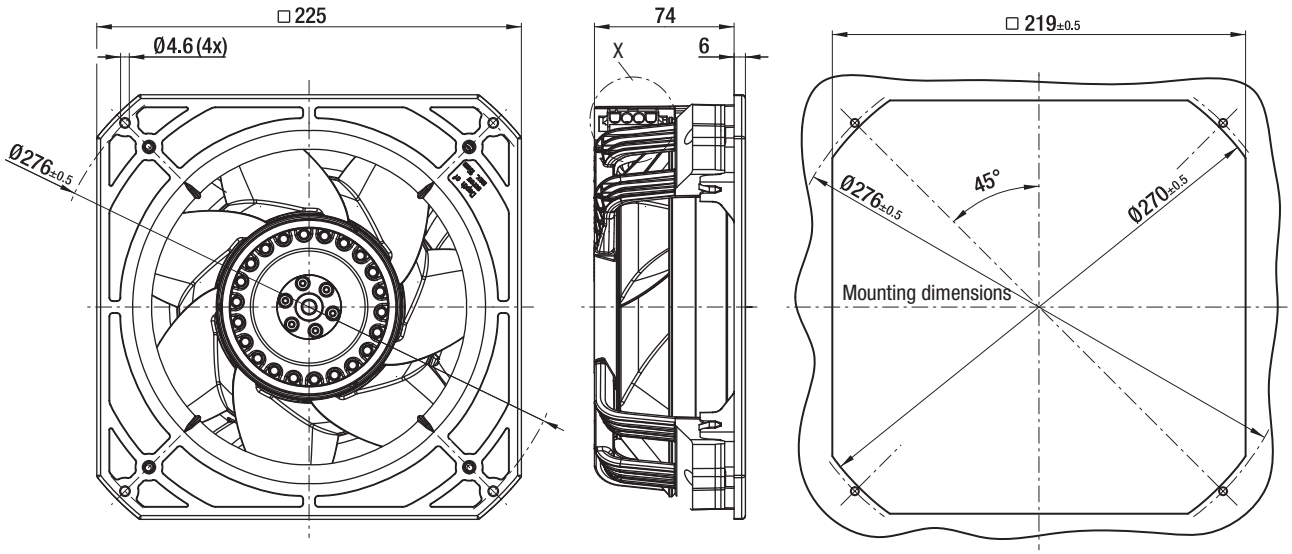


Coded plug system
Universal Mate-N-Lok
Connector shell: AMP 350 780-1
3x plug pins: AMP 926 885-1
Mating connector (not included in scope of delivery):
Connector shell: AMP 350 779-4
3x sockets: AMP 926 884-1

X view

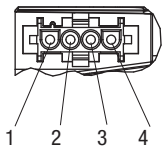


1 = not used
2 = N + capacitor
3 = L
4 = PE

Max. 845 m³/h

# AC diagonal module

## Ø 200 mm



- **Material:** Housing: PA plastic<br>Support bracket: PA plastic<br>Impeller: PA plastic<br>Rotor: Painted black
- **Number of blades:** 7
- **Direction of air flow:** "V", single inlet
- **Direction of rotation:** Clockwise, looking towards rotor
- **Degree of protection:** IP 44, depending on installation and position
- **Insulation class:** "F"
- **Installation position:** Any
- **Condensation drainage holes:** None
- **Mode of operation:** Continuous operation (S1)
- **Bearings:** Maintenance-free ball bearings

VJH0200X2MES

**Nominal data**

| Type | Motor | Curve | Nominal voltage | Frequency | Air flow | Nominal speed | Power consumption | Input current | Capacitor | Sound power level | Max. back-pressure | Admissible amb. temp. | Weight | Connection diagram |
|---|---|---|---|---|---|---|---|---|---|---|---|---|---|---|
| | | | VAC | Hz | m³/h | rpm⁻¹ | W | A | µF/VDB | dB(A) | Pa | °C | kg | |
| **K2E 200-AA52 -02** | M2E 068-CF | Ⓐ | 1~ 230 | 50 | 765 | 2650 | 65 | 0.30 | 2.0/400 | 70 | 200 | -25..+80 | 2.1 | P. 280 / A1) |
| | | Ⓑ | 1~ 230 | 60 | 845 | 2950 | 90 | 0.40 | 2.0/400 | 73 | 245 | -25..+80 | 2.1 | |

Subject to change

**Curves:**

——— 50 Hz

- - - - - - - 60 Hz

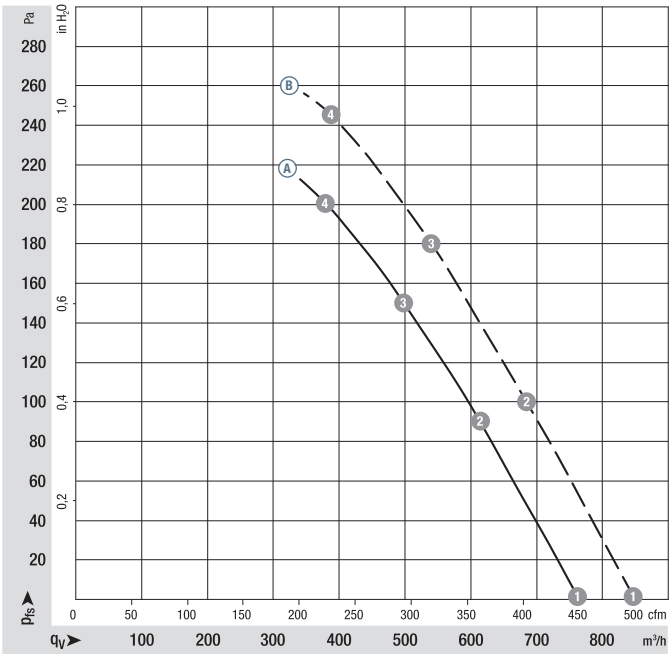


| | | n rpm⁻¹ | $P_{ed}$ W | I A | $L_WA$ dB(A) |
|---|---|---|---|---|---|
| Ⓐ | 1 | 2650 | 65 | 0.30 | 70 |
| Ⓐ | 2 | 2620 | 67 | 0.30 | 68 |
| Ⓐ | 3 | 2605 | 68 | 0.30 | 67 |
| Ⓐ | 4 | 2610 | 68 | 0.30 | 69 |
| Ⓑ | 1 | 2950 | 90 | 0.40 | 73 |
| Ⓑ | 2 | 2865 | 93 | 0.41 | 70 |
| Ⓑ | 3 | 2820 | 96 | 0.42 | 69 |
| Ⓑ | 4 | 2840 | 94 | 0.41 | 71 |

Air performance measured according to: ISO 5801. Installation category A, without contact protection. Suction-side noise levels: $L_WA$ according to ISO 13347, $L_pA$ measured at 1 m distance from fan axis. The values given are applicable only under the specified measuring conditions and may differ depending on the installation conditions. In the event of deviation from the standard configuration, the parameters must be checked after installation! For detailed information see http://www.ebmpapst.com/general conditions



ebmpapst

- **Motor protection:** Thermal overload protector (TOP) connected internally
- **Touch current:** < 0.75 mA acc. to IEC 60990 (test circuit, illustration 4)
- **Cable exit:** Lateral
- **Electrical hookup** Via connector
- **Protection class:** I (with customer connection to grounding conductor)
- **Conformity with standard(s):** EN 60335-1, CE
- **Approvals:** UL 2111, CSA C22.2 no. 77

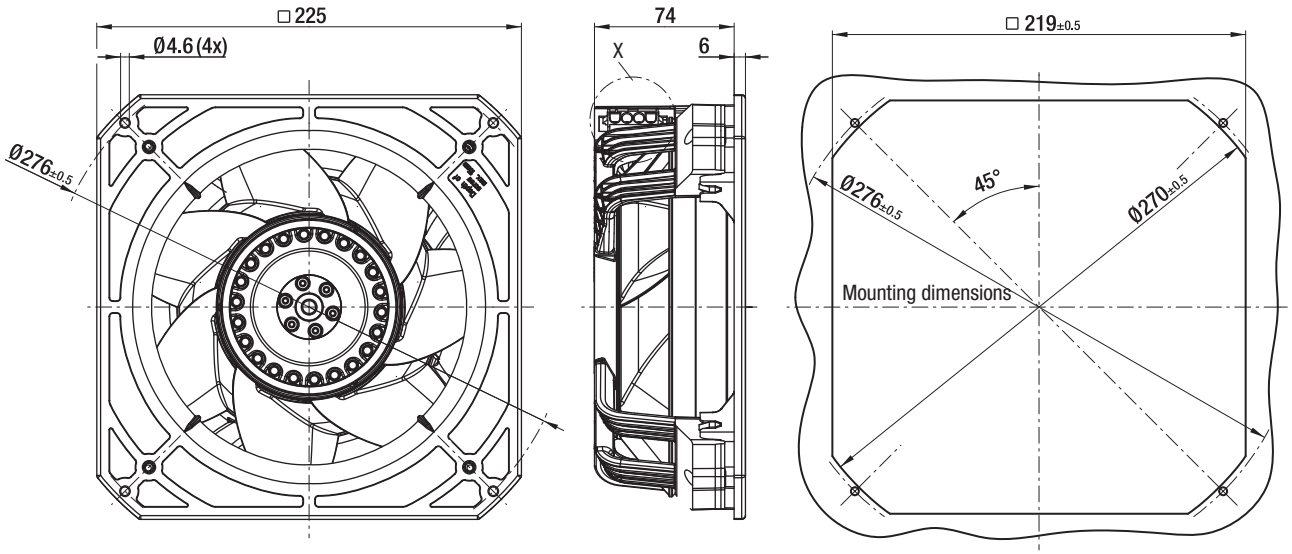


Coded plug system
Universal Mate-N-Lok
Connector shell: AMP 350 780-1
3x plug pins: AMP 926 885-1
Mating connector (not included in scope of delivery):
Connector shell: AMP 350 779-4
3x sockets: AMP 926 884-1

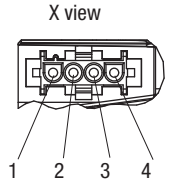


1 = not used
2 = N + capacitor
3 = L
4 = PE

Max. 880 m³/h

# AC diagonal module

## Ø 200 mm



- **Material:** Housing: PA plastic<br>Support bracket: PA plastic<br>Impeller: PA plastic<br>Rotor: Painted black
- **Number of blades:** 7
- **Direction of air flow:** "V", single inlet
- **Direction of rotation:** Clockwise, looking towards rotor
- **Degree of protection:** IP 44, depending on installation and position
- **Insulation class:** "F"
- **Installation position:** Any
- **Condensation drainage holes:** None
- **Mode of operation:** Continuous operation (S1)
- **Bearings:** Maintenance-free ball bearings

VJH0200X3MES

**Nominal data**

| Type | Motor | Curve | Nominal voltage VAC | Frequency Hz | Air flow m³/h | Nominal speed rpm⁻¹ | Power consumption W | Input current A | Capacitor µF/VDB | Sound power level dB(A) | Max. back-pressure Pa | Admissible amb. temp. °C | Weight kg | Connection diagram |
|---|---|---|---|---|---|---|---|---|---|---|---|---|---|---|
| **K2D 200-AA02 -02** | M2D 068-CF | Ⓐ | 3~ 400 Y | 50 | 780 | 2700 | 65 | 0.15 | --- | 71 | 210 | -25..+75 | 2.0 | P. 280 / C2) |
| | | Ⓑ | 3~ 400 Y | 60 | 880 | 3050 | 90 | 0.16 | --- | 73 | 260 | -25..+75 | 2.0 | |

Subject to change

**Curves:**

——— 50 Hz

- - - - - - - 60 Hz

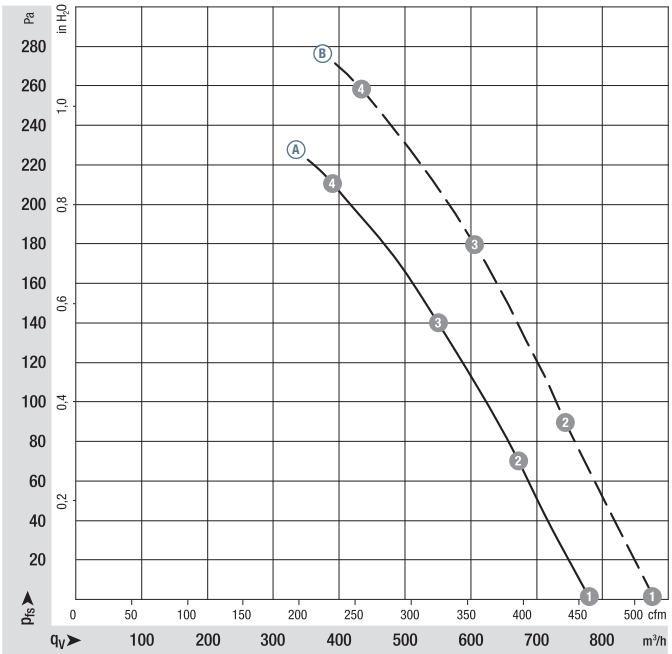


| | | n rpm⁻¹ | Ped W | I A | LWA dB(A) |
|---|---|---|---|---|---|
| Ⓐ | 1 | 2700 | 65 | 0.15 | 71 |
| Ⓐ | 2 | 2695 | 69 | 0.16 | 69 |
| Ⓐ | 3 | 2675 | 71 | 0.16 | 68 |
| Ⓐ | 4 | 2680 | 70 | 0.16 | 69 |
| Ⓑ | 1 | 3050 | 90 | 0.16 | 73 |
| Ⓑ | 2 | 3010 | 94 | 0.16 | 71 |
| Ⓑ | 3 | 2970 | 98 | 0.17 | 70 |
| Ⓑ | 4 | 2975 | 96 | 0.17 | 72 |

Air performance measured according to: ISO 5801. Installation category A, without contact protection. Suction-side noise levels: $L_WA$ according to ISO 13347, $L_pA$ measured at 1 m distance from fan axis. The values given are applicable only under the specified measuring conditions and may differ depending on the installation conditions. In the event of deviation from the standard configuration, the parameters must be checked after installation! For detailed information see http://www.ebmpapst.com/general conditions



ebmpapst

- **Motor protection:** thermal overload protector wired internally
- **Touch current:** < 0.75 mA acc. to IEC 60990 (test circuit, illustration 4)
- **Cable exit:** Lateral
- **Electrical hookup** Via connector
- **Protection class:** I (with customer connection to grounding conductor)
- **Conformity with standard(s):** EN 60335-1, CE

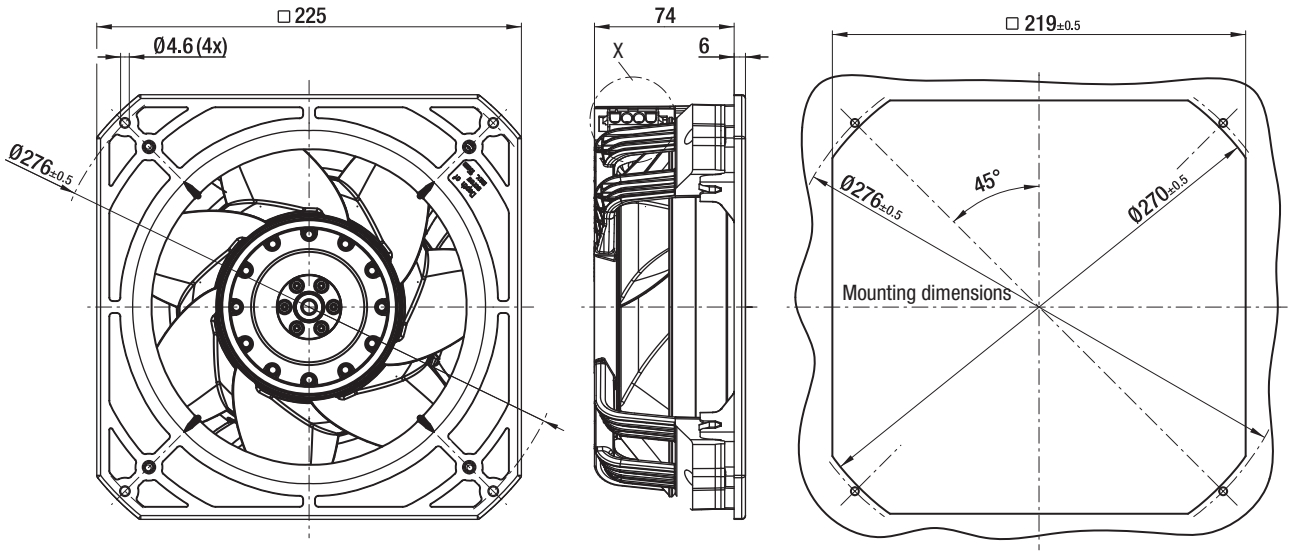


Coded plug system
Universal Mate-N-Lok
Connector shell: AMP 350 780-1
4 x plug pins: AMP 926 885-1
Mating connector (not included in scope of delivery):
Connector shell: AMP 350 779-4
4x sockets: AMP 926 884-1

X view

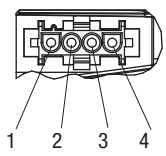


1 = L3
2 = L1
3 = L2
4 = PE



# AC centrifugal fans




AC centrifugal fan overview **245**
AC centrifugal fans **246**

# AC centrifugal fans

*Technical information*


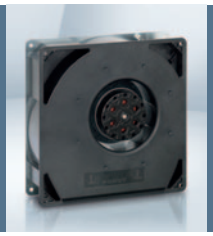


**Product line**
The renowned ebm-papst AC fans are used when DC voltage is not available. The AC range of fans is based on experience gained from decades of development know-how, millions of units in series production, and the innovation competence of a world-wide technology pioneer.

In this catalog, we offer you the broad spectrum of our AC fans. In addition to complete systems, you will also find fans without external housing. They offer economic benefits whenever the air duct design can be integrated in the respective device.

**Variety of sizes**
AC fans are available in a variety of sizes with either air exhaust or air intake over struts. Silent running models with sleeve bearings. Electrical connection with plug connection or external exposed connection wires are available.

**Shaded-pole or capacitor motors**
Fan drives by shaded-pole or capacitor motors, most of which incorporate the world-famous ebm-papst external rotor principle. The fan blades are directly attached to the external rotor of the external rotor motor. This construction combining high performance with profitability.

**Flat built AC fans**
ebm-papst also has AC fans with a particularly flat construction and an internal rotor motor. Their advantage: quick start to full speed. A plastic impeller and the smaller and lighter internal rotor motor result in lower rotational inertia.

**Bearings**
AC fans with sleeve bearings are powered by Class E insulated motors. Fans with ball bearings are equipped with Class B, E, or F insulated motors.

**Degree of protection**
All ebm-papst fans conform to the requirements of IP 20. Fans conforming to IP 54 / IP 65 and special degrees of protection are also available on request.

**AC voltage**
The line of AC fans for Euro voltage according to IEC 60038 (230 V ± 10 %) is also available in 115 V.

**Frequencies**
AC fans can be operated at frequencies of 50 or 60 Hz. In this case, their technical data changes accordingly.

**Capacitor**
Fans driven by capacitor external motors provide particularly high operating efficiency. Generally, the required motor run capacitor is already integrated in the fan housing.

**Overloading**
Almost all AC fans are protected against overloading (e. g. due to locked rotor) – either impedance protected (marked "Impedance protected" or "Z. P.") or equipped with a thermal switch (marked "Thermally protected" or "Th. P."). The model designation of these fans ends with "S".

# Centrifugal fans for AC operation

## Overview of air performance

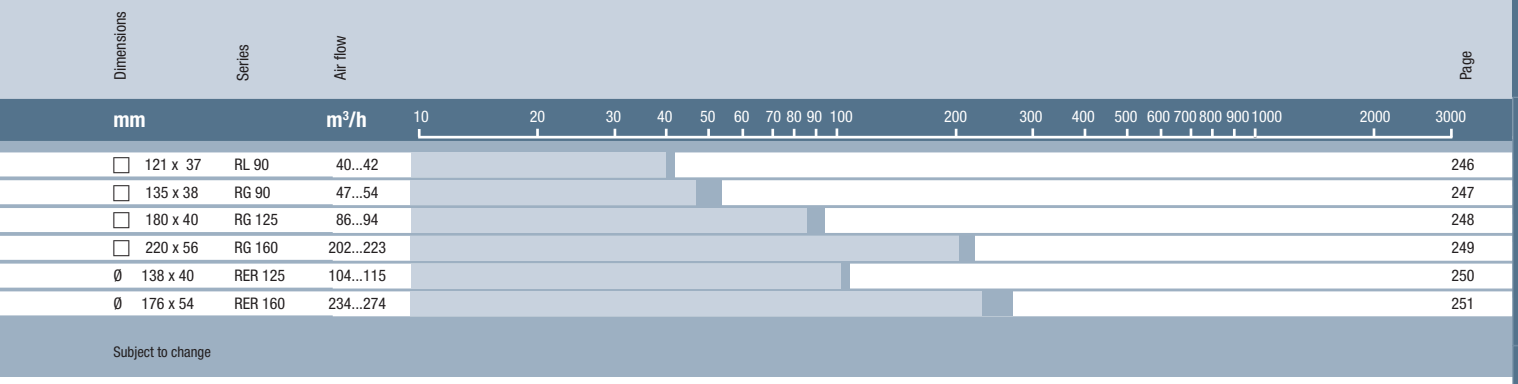


Subject to change

## Overview of technically feasible designs

| Dimensions | Series | VDE, UL, CSA | SINTEC sleeve bearings/ Ball bearings | Speed signal | Moisture protection IP >= 54 | IP 65 | Salt spray protection | Page |
|---|---|---|---|---|---|---|---|---|
| **Centrifugal fans** | | | | | | | | |
| mm | Series | | | OPTIONAL | | | | P. |
| ☐ 121 x 37 | RL 90 | yes | ▫/■ | – | • | • | – | • | 246 |
| ☐ 135 x 38 | RG 90 | yes | ▫/■ | – | • | • | – | • | 247 |
| ☐ 180 x 40 | RG 125 | yes | ■ | – | • | • | – | • | 248 |
| ☐ 220 x 56 | RG 160 | yes | ■ | – | • | • | – | • | 249 |
| Ø 138 x 40 | RER 125 | yes | ■ | – | • | • | – | • | 250 |
| Ø 176 x 54 | RER 160 | yes | ■ | – | • | • | – | • | 251 |

Subject to change

• available – not yet available ▫ Sleeve bearings ■ Ball bearings

Max. 42 m³/h

# AC centrifugal fans

☐ 121 x 37 mm

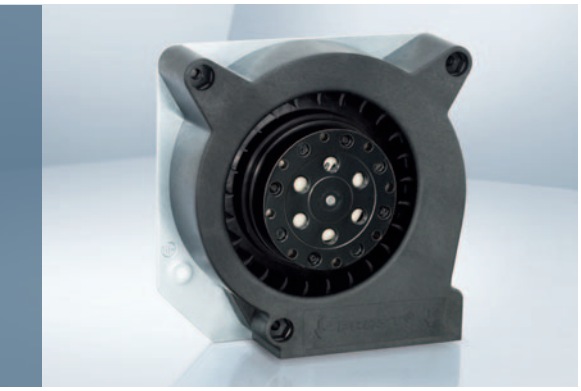

- **Material:** Scroll housing: GRP[1] (PBT)
  Impeller: GRP[1] (PA)
  Housing base: Sheet steel
- **Direction of air flow:** Centrifugal: discharge through window in housing
- **Direction of rotation:** Clockwise, looking towards rotor
- **Connection:** Via 2 single wires; housing base with flat plugs 6.3 x 0.8 mm for ground conductor
- **Highlights:** Forward-curved impeller
- **Weight:** 680 g

- **Possible special versions:**
  (See page 10)
  - Moisture protection
  - Salt spray protection
  - Degree of protection: IP 54

1) Fiberglass-reinforced plastic

| Series RL 90<br>VHS0090XQHCS<br>**Nominal data** | Air flow | Air flow | **Nominal voltage** | **Frequency** | Sound power level | Sintec sleeve bearings<br>Ball bearings | Power consumption | Nominal speed | Temperature range | Service life $L_{10}$<br>at 40 °C | at T max | Curve |
|---|---|---|---|---|---|---|---|---|---|---|---|---|
| **Type** | **m³/h** | **cfm** | **VAC** | **Hz** | **Bel(A)** | □ / ■ | **Watts** | **rpm⁻¹** | **°C** | **Hours** | **Hours** | |
| RL 90-18/50 | 40 | 23.5 | **230** | **50** | 5.6 | □ | 20.0 | 2 450 | -10...+50 | 37 500 / 30 000 | | ① |
| RL 90-18/56 | 40 | 23.5 | **230** | **50** | 5.6 | ■ | 20.0 | 2 450 | -30...+70 | 37 500 / 20 000 | | ① |
| RL 90-18/00 | 42 | 24.7 | **115** | **60** | 6.0 | □ | 19.5 | 2 550 | -10...+60 | 37 500 / 25 000 | | ② |
| RL 90-18/06 | 42 | 24.7 | **115** | **60** | 6.0 | ■ | 19.5 | 2 550 | -30...+85 | 37 500 / 15 000 | | ② |

Subject to change

| Fan type | | Connection wires |
|---|---|---|
| RL 90-18/50 | RL 90-18/00 | AWG 18, TR 32 |
| RL 90-18/56 | RL 90-18/06 | AWG 22 |

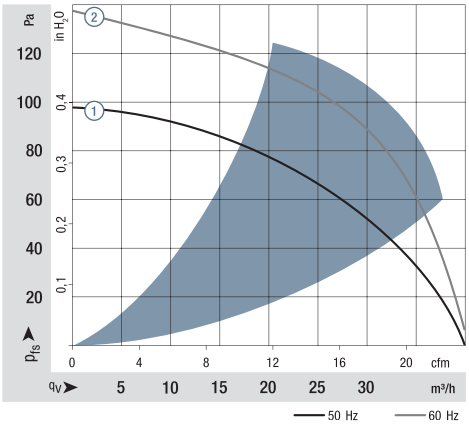


Air performance measured according to: ISO 5801.
Installation category A, without contact protection.
Noise: Total sound power level $L_{WA}$ ISO 10302measured on a hemisphere with a radius of 2 m;
Sound pressure level $L_{pA}$ measured at 1 m distance from fan axis.
The values given are applicable only under the specified measuring conditions and may differ depending on the installation conditions. described measurement set-up and may vary depending on the installation situation.
For detailed information see http://www.ebmpapst.com/general conditions

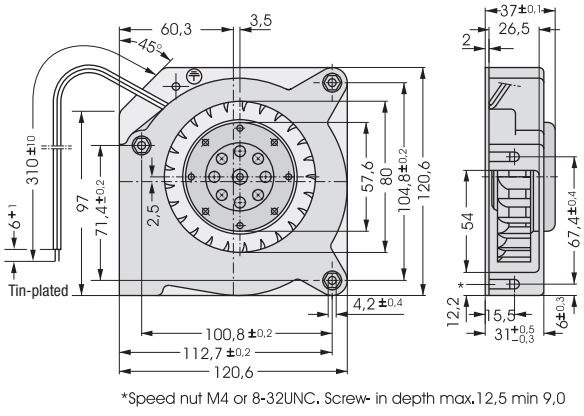


*Speed nut M4 or 8-32UNC. Screw- in depth max.12,5 min 9,0



ebmpapst

Max. 54 m³/h

# AC centrifugal fans

☐ 135 x 38 mm

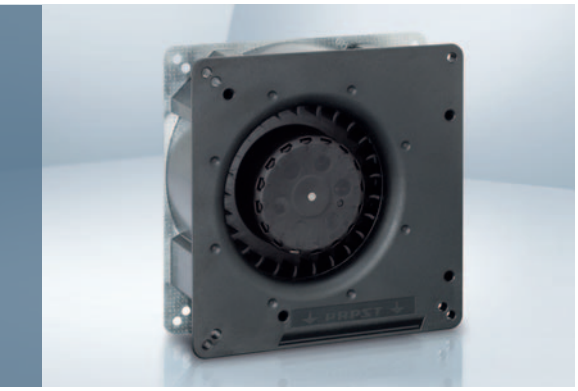

- **Material:** Scroll housing: GRP[1] (PBT)
  Impeller: GRP[1] (PA)
  Housing base: Sheet steel
- **Direction of air flow:** Centrifugal: discharge through window in housing
- **Direction of rotation:** Clockwise, looking towards rotor
- **Connection:** To 2 single wires AWG 22.
- **Highlights:** Forward-curved impeller
- **Weight:** 560 g

- **Possible special versions:**
  (See page 10)
  - Moisture protection
  - Salt spray protection
  - Degree of protection: IP 54

1) Fiberglass-reinforced plastic

Series RG 90
VHS0090XQHCS

**Nominal data**

| Type | Air flow m³/h | Air flow cfm | Nominal voltage VAC | Frequency Hz | Sound power level Bel(A) | Sintec sleeve bearings ☐ / Ball bearings ■ | Power consumption Watts | Nominal speed rpm⁻¹ | Temperature range °C | Service life $L_{10}$ at 40 °C Hours | at $T_{max}$ Hours | Curve |
|---|---|---|---|---|---|---|---|---|---|---|---|---|
| RG 90-18/50 | 54 | 32 | **230** | **50** | 5.8 | ☐ | 22.0 | 2 200 | -30...+60 | 35 000 / 22 500 | | ① |
| RG 90-18/56 | 54 | 32 | **230** | **50** | 5.8 | ■ | 22.0 | 2 200 | -30...+60 | 35 000 / 22 500 | | ① |
| RG 90-18/00 | 47 | 28 | **115** | **60** | 6.2 | ☐ | 22.0 | 1 900 | -30...+65 | 35 000 / 20 000 | | ② |
| RG 90-18/06 | 47 | 28 | **115** | **60** | 6.2 | ■ | 22.0 | 1 900 | -30...+65 | 35 000 / 20 000 | | ② |

Subject to change

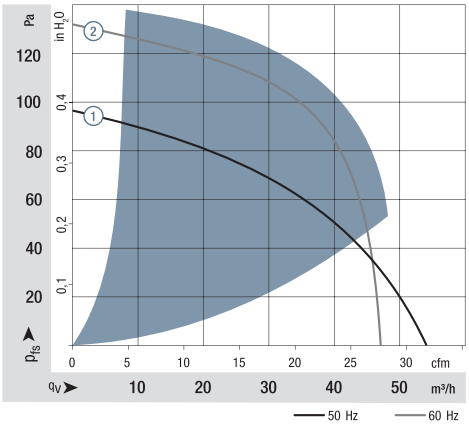


Air performance measured according to: ISO 5801.
Installation category A, without contact protection.
Noise: Total sound power level $L_{WA}$ ISO 10302 measured on a hemisphere with a radius of 2 m.
Sound pressure level $L_{pA}$ measured at 1 m distance from fan axis.
The values given are applicable only under the specified measuring conditions and may differ depending on the installation conditions.
In the event of deviation from the standard configuration, the parameters must be checked after installation!
For detailed information see
http://www.ebmpapst.com/general conditions

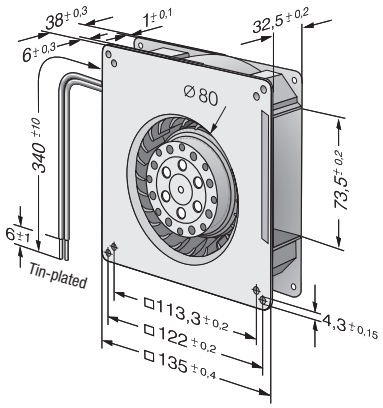

Max. 94 m³/h

# AC centrifugal fans

☐ 180 x 40 mm

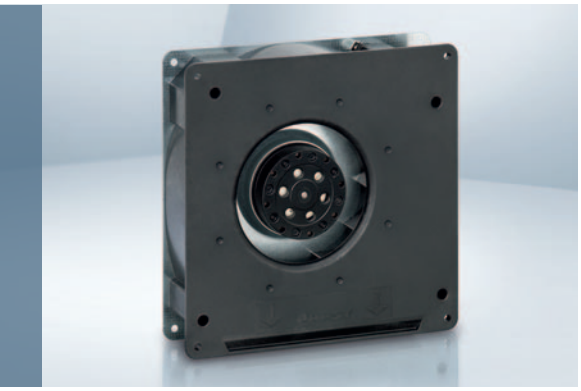

- **Material:** Scroll housing: GRP[1] (PBT)
  Impeller: GRP[1] (PA)
  Housing base: Sheet steel
- **Direction of air flow:** Centrifugal: discharge through window in housing
- **Direction of rotation:** Clockwise, looking towards rotor
- **Connection:** To 2 single wires AWG 22.
- **Highlights:** Backward-curved impeller
- **Weight:** 850 g

- **Possible special versions:**
  (See page 10)
  - Moisture protection
  - Salt spray protection
  - Degree of protection: IP 54

1) Fiberglass-reinforced plastic

| Series RG 125<br>VCS0125XQHCS<br>**Nominal data** | Air flow | Air flow | **Nominal voltage** | **Frequency** | Sound power level | Sintec sleeve bearings<br>Ball bearings | Power consumption | Nominal speed | Temperature range | Service life $L_{10}$<br>at 40 °C | at T max | Curve |
|---|---|---|---|---|---|---|---|---|---|---|---|---|
| **Type** | **m³/h** | **cfm** | **VAC** | **Hz** | **Bel(A)** | **□/■** | **Watts** | **rpm⁻¹** | **°C** | **Hours** | **Hours** | |
| RG 125-19/56 | 86 | 51 | **230** | **50** | 5.8 | ■ | 20.0 | 2 550 | -30...+70 | 37 500 / 20 000 | | ① |
| RG 125-19/06 | 94 | 55 | **115** | **60** | 6.0 | ■ | 19.0 | 2 750 | -30...+80 | 40 000 / 15 000 | | ② |

Subject to change

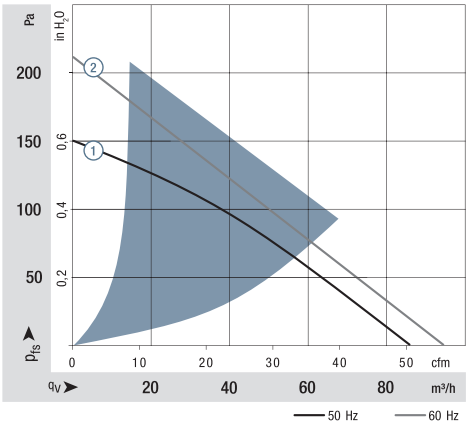


Air performance measured according to: ISO 5801.
Installation category A, without contact protection.
Noise: Total sound power level $L_{WA}$ ISO 10302 measured on a hemisphere with a radius of 2 m.
Sound pressure level $L_{pA}$ measured at 1 m distance from fan axis.
The values given are applicable only under the specified measuring conditions and may differ depending on the installation conditions.
In the event of deviation from the standard configuration, the parameters must be checked after installation!
For detailed information see
http://www.ebmpapst.com/general conditions

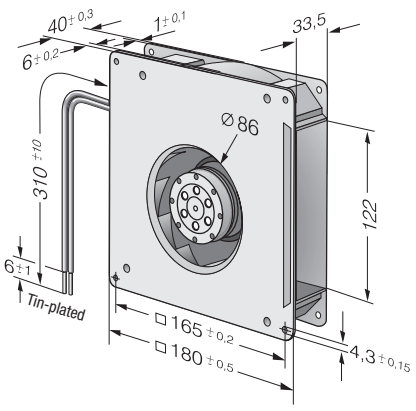




ebmpapst

Max. 223 m³/h

# AC centrifugal fans

☐ 220 x 56 mm

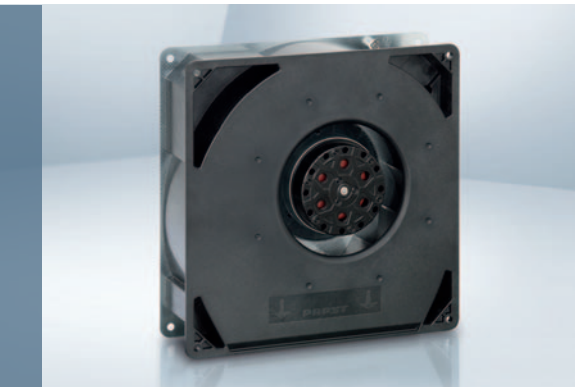

- **Material:** Scroll housing: GRP[1] (PBT)
  Impeller: GRP[1] (PA)
  Housing base: Sheet steel
- **Direction of air flow:** Centrifugal: discharge through window in housing
- **Direction of rotation:** Counterclockwise, looking towards rotor
- **Connection:** To 2 single wires AWG 18.
- **Highlights:** Backward-curved impeller
- **Weight:** 1.7 kg

- **Possible special versions:**
  (See page 10)
  - Moisture protection

1) Fiberglass-reinforced plastic

Series RG 160
VCS0160XQKDS

| Nominal data | Air flow | Air flow | Nominal voltage | Frequency | Sound power level | Sintec sleeve bearings / Ball bearings | Power consumption | Nominal speed | Temperature range | Service life $L_{10}$ at 40 °C | at $T_{max}$ | Curve |
|---|---|---|---|---|---|---|---|---|---|---|---|---|
| **Type** | **m³/h** | **cfm** | **VAC** | **Hz** | **Bel(A)** | **□/■** | **Watts** | **rpm⁻¹** | **°C** | **Hours** | **Hours** | |
| RG 160-28/56S | 202 | 119 | **230** | **50** | 6.6 | ■ | 47.0 | 2 750 | -30...+70 | 30 000 / 15 000 | | ① |
| RG 160-28/06S | 223 | 131 | **115** | **60** | 6.9 | ■ | 50.0 | 3 050 | -30...+80 | 27 500 / 12 500 | | ② |

Subject to change

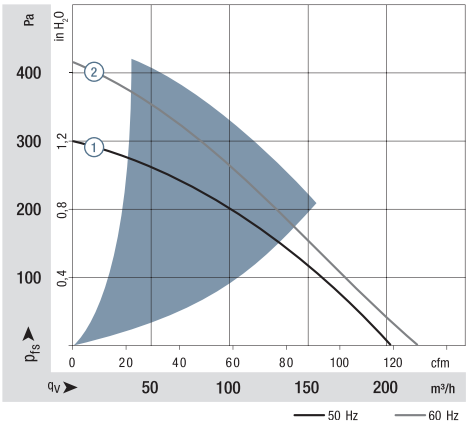


Air performance measured according to: ISO 5801.
Installation category A, without contact protection.
Noise: Total sound power level $L_{WA}$ ISO 10302 measured on a hemisphere with a radius of 2 m.
Sound pressure level $L_{pA}$ measured at 1 m distance from fan axis.
The values given are applicable only under the specified measuring conditions and may differ depending on the installation conditions.
In the event of deviation from the standard configuration, the parameters must be checked after installation!
For detailed information see
http://www.ebmpapst.com/general conditions

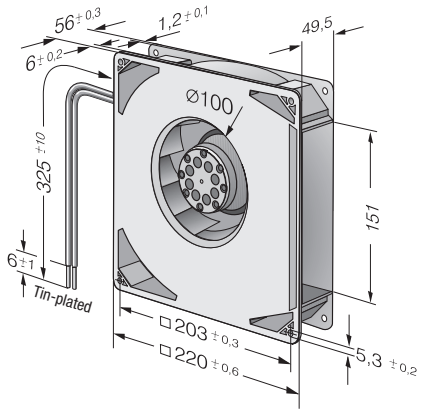

Max. 115 m³/h

# AC centrifugal fans

## Ø 138 x 40 mm

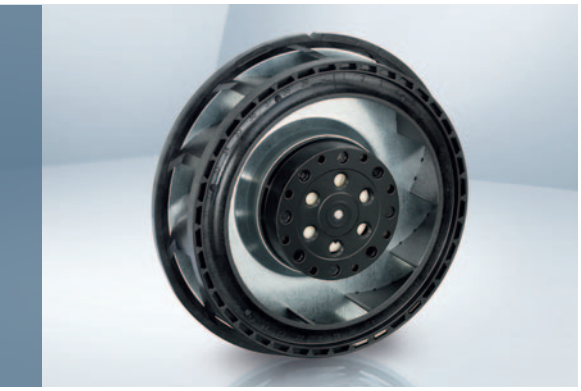

- **Material:** Scroll housing: GRP[1] (PBT)
  Impeller: GRP[1] (PA)
  with sheet steel reinforced
- **Direction of air flow:** centrifugal
- **Direction of rotation:** Clockwise,
  looking towards rotor
- **Connection:** To 2 single wires AWG 22.
- **Highlights:** Backward-curved impeller
- **Weight:** 500 g

- **Possible special versions:**
  (See page 10)
  - Moisture protection
  - Salt spray protection
  - Degree of protection: IP 54

1) Fiberglass-reinforced plastic

Series RER 125
VBS0125XQHCS

| Nominal data | Air flow | Air flow | Nominal voltage | Frequency | Sound power level | Sintec sleeve bearings / Ball bearings | Power consumption | Nominal speed | Temperature range | Service life $L_{10}$ at 40 °C | at T max | Curve |
|---|---|---|---|---|---|---|---|---|---|---|---|---|
| **Type** | **m³/h** | **cfm** | **VAC** | **Hz** | **Bel(A)** | **□ / ■** | **Watts** | **rpm⁻¹** | **°C** | **Hours** | **Hours** | |
| RER 125-19/56 | 104 | 61 | **230** | **50** | 6.2 | ■ | 19.0 | 2 600 | -30...+60 | 37 500 / 22 500 | | ① |
| RER 125-19/06 | 115 | 68 | **115** | **60** | 6.5 | ■ | 18.0 | 2 850 | -30...+70 | 40 000 / 20 000 | | ② |

Subject to change

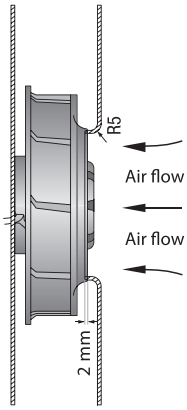


The air flow and sound level of the centrifugal fans without external housing depend on their individual installation conditions. The stated air flow and noise levels have been measured under the following conditions:

Centrifugal fan mounted on a base plate 220 x 220 mm.
Cover plate 220 x 220 mm with an air inlet of Ø 86 mm, concentric to the impeller.

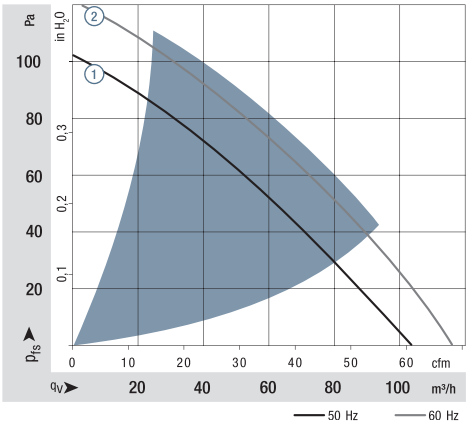


Air performance measured according to: ISO 5801.
Installation category A, with ebm-papst inlet ring without contact protection.
Noise: Total sound power level $L_{WA}$ ISO 10302 measured on a hemisphere with a distance of 2 m.
Sound pressure level $L_{pA}$ measured at 1 m distance from fan axis.
The values given are applicable only under the specified measuring conditions and may differ depending on the installation conditions.
In the event of deviation from the standard configuration, the parameters must be checked after installation!
For detailed information see
http://www.ebmpapst.com/general conditions

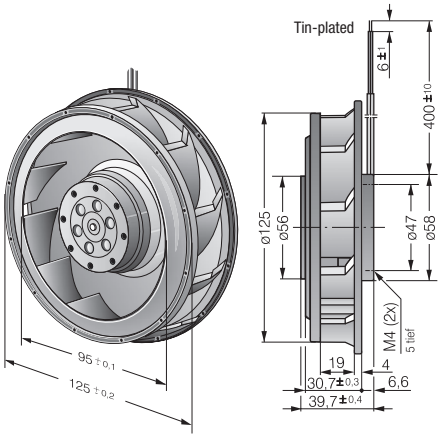




ebmpapst

Max. 274 m³/h

# AC centrifugal fans

## Ø 176 x 54 mm

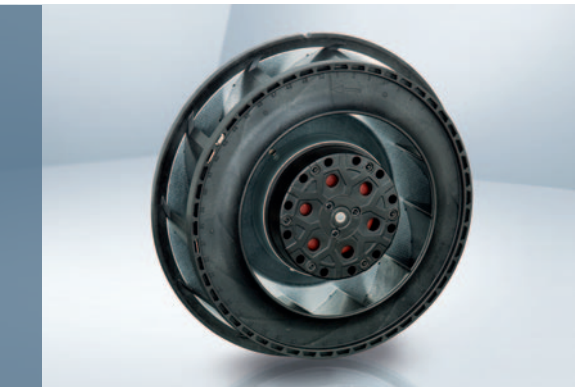

- **Material:** Scroll housing: GRP[1)] (PBT)
  Impeller: GRP[1)] (PA)
  with sheet steel reinforced
- **Direction of air flow:** centrifugal
- **Direction of rotation:** Counterclockwise, looking towards rotor
- **Connection:** To 2 single wires AWG 18
- **Highlights:** Backward-curved impeller
- **Weight:** 1.0 kg

- **Possible special versions:**
  (See page 10)
  - Moisture protection

1) Fiberglass-reinforced plastic

Series RER 160
VBS0160XQKDS

| Nominal data | Air flow | Air flow | Nominal voltage | Frequency | Sound power level | Sintec sleeve bearings / Ball bearings | Power consumption | Nominal speed | Temperature range | Service life $L_{10}$ at 40 °C | at $T_{max}$ | Curve |
|---|---|---|---|---|---|---|---|---|---|---|---|---|
| **Type** | **m³/h** | **cfm** | **VAC** | **Hz** | **Bel(A)** | **□/■** | **Watts** | **rpm⁻¹** | **°C** | **Hours** | **Hours** | |
| RER 160-28/56S | 234 | 138 | **230** | **50** | 6.6 | ■ | 45.0 | 2 800 | -30...+60 | 30 000 / 20 000 | | ① |
| RER 160-28/06S | 274 | 161 | **115** | **60** | 6.8 | ■ | 46.0 | 3 250 | -30...+70 | 30 000 / 15 000 | | ② |

Subject to change

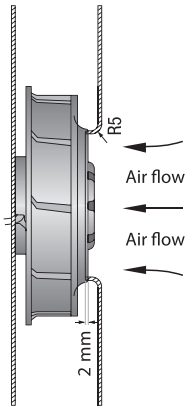


The air flow and sound level of the centrifugal fans without external housing depend on their individual installation conditions. The stated air flow and noise levels have been measured under the following conditions:

Centrifugal fan mounted on a base plate 260 x 260 mm.
Cover plate 260 x 260 mm with an air inlet of Ø 100 mm, concentric to the impeller.

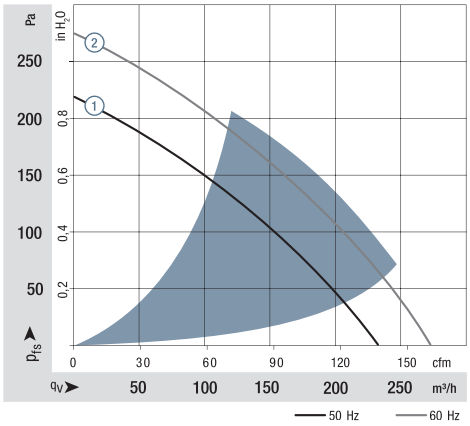


Air performance measured according to: ISO 5801.
Installation category A, with ebm-papst inlet ring without contact protection.
Noise: Total sound power level $L_{WA}$ ISO 10302 measured on a hemisphere with a distance of 2 m.
Sound pressure level $L_{pA}$ measured at 1 m distance from fan axis.
The values given are applicable only under the specified measuring conditions and may differ depending on the installation conditions.
In the event of deviation from the standard configuration, the parameters must be checked after installation!
For detailed information see
http://www.ebmpapst.com/general conditions

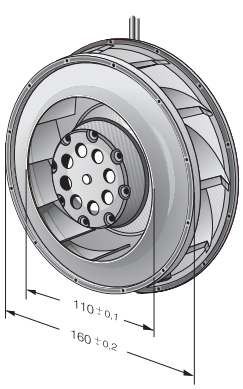


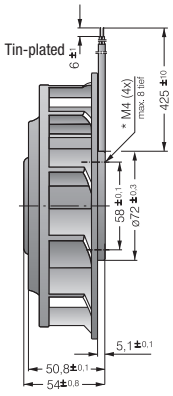



# Accessories




| | |
|---|---|
| Finger guards | **254** |
| Filter fan guards | **264** |
| Air inlet grill | **267** |
| Inlet rings | **268** |
| Connection cables | **270** |
| Handheld Programmer | **271** |
| Accessories | **272** |
| Connection diagrams | **273** |


ebm-papst offers a comprehensive selection of accessories for optimum fan operation, from temperature sensors for speed-controlled fans, to finger guards for all variants, to cables, filters, and screens, to spacers and installation parts. Even in the case of very special parts, you can be sure: We will assist you every way possible. The sales experts at ebm-papst will be happy to assist you with your question concerning fan installation and use.

From selection to accessories:
Insist on the efficient and reliable service provided by ebm-papst.

# Finger guards

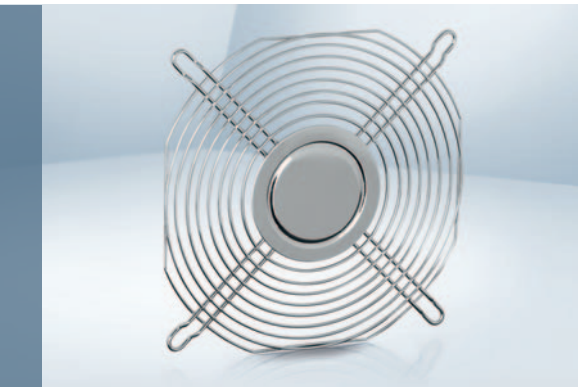

- **Material:** Galvanized or nickel-plated steel wire
- **Note:** Finger guard according to DIN EN ISO 13857 (previously EN 294).
  Additional finger guards that do not satisfy DIN EN ISO 13857 available on request.
  Our finger guards are designed specifically to be uses with ebm-papst fans. They combine the highest degree of safety with minimum effect on the operating noise. Please note that the safety-related clearances cannot be guaranteed when finger guards made by other manufacturers are used.

| Fan size | Fan series | Type | Order number | Side | Drawing see page |
|---|---|---|---|---|---|
| 40 x 40 | 400 F, 400, 420 J | **LZ29-1** | 9920029001 | Intake/Outlet | 255 |
| 50 x 50 | 500 F | **LZ31** | 9920031000 | Intake/Outlet | 255 |
| 60 x 60 | 600 F, 620, 630, 600 N, 600 J | **LZ28**<br>**LZ28-1** | 9920028000<br>9920028001 | Intake/Outlet | 255 |
| 80 x 80 | 8450, 8400 N,<br>8300 N, 8200 J,<br>8000 N, CoR 8200 J | **LZ22-2**<br>**LZ32-4**<br>**LZ22-N**<br>**LZ32-14** | 9920022002<br>9920032004<br>9920022001<br>9920145006 | Intake/Outlet | 255 |
| 92 x 92 | 3400 N, 3300 N, 3200 J,<br>3250 J, 3900, 3000 | **LZ23**<br>**LZ23-1** | 9920023000<br>9920023001 | Intake/Outlet | 255 |
| 119 x 119 | 4400 F, 4400 FN, 4300 N,<br>4400, 4100 N, 4000 N,<br>4000 Z, 9900 | **LZ20**<br>**LZ30** | 9920020000<br>9920030000 | Intake/Outlet | 255 |
| | | **LZ30-3**<br>**LZ30-4** | 9920030003<br>9920030004 | | 256 |
| | DV 4100 | **LZ30-4** | 9920030004 | Intake/Outlet | 256 |
| 127 x 127 | DV 5200 | **LZ35** | 9920035000 | Intake/Outlet | 256 |
| | 5200 N, 5900 | **LZ35**<br>**LZ35-2** | 9920035000<br>9920035002 | Intake/Outlet | 256 |
| 135 x 135 | 5100 N, 5600 | **LZ25** | 9920025000 | Intake/Outlet | 256 |
| 140 x 140 | 5300, 5300 TD | **LZ53** | 9920053000 | Intake/Outlet | 256 |
| Ø 150 | 7100 N, 7200 N | **LZ24** | 9920024000 | Intake/Outlet | 256 |
| | | **LZ27**<br>**LZ36** | 9920027000<br>9920036000 | Intake/Outlet | 257 |
| Ø 172 | 6300 N, 6300 NTD,<br>6300, 6300 TD | **LZ26**<br>**LZ37**<br>**LZ37-10**<br>**LZ38** | 9920026000<br>9920037000<br>9920145004<br>9920038000 | Intake/Outlet | 257 |
| | DV 6300 | **LZ39**<br>**LZ52** | 9920039000<br>9920052000 | Outlet side<br>Intake side | 257 |
| 172 x 150 | 6400, 6400 TD | **LZ38** | 9920038000 | Intake/Outlet | 257 |
| 172 x 160 | DV 6400, DV 6400 TD | **LZ38** | 9920038000 | Intake side | 257 |
| 220 x 200 | 2200 FTD | **LZ22** | 9920022000 | Intake/Outlet | 257 |
| Fan unit | | **LZ38-1** | 9920038001 | | 257 |

Subject to change

All measurements are given in mm.

# Finger guards

## LZ29-1 — Fan size 40 x 40

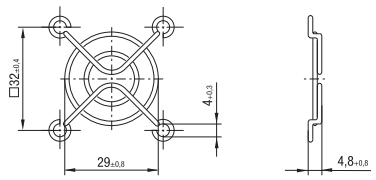


## LZ31 — Fan size 50 x 50

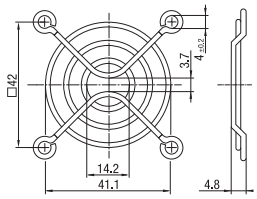


## LZ28 — Fan size 60 x 60

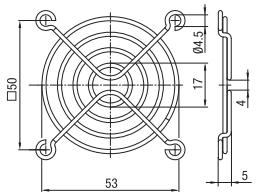


## LZ28-1 — Fan size 60 x 60

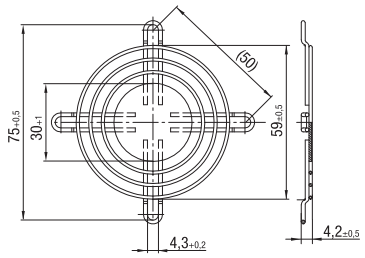


## LZ22-2 — Fan size 80 x 80

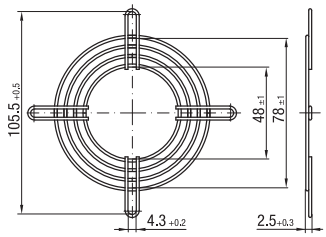


## LZ32-4 — Fan size 80 x 80

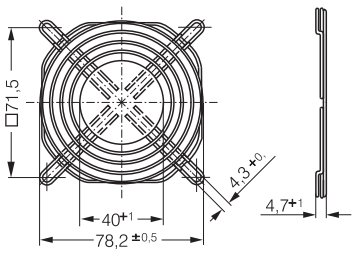


## LZ22-N — Fan size 80 x 80

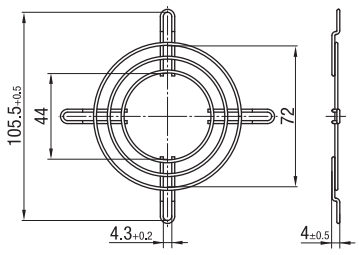


## LZ32-14 — Fan size 80 x 80

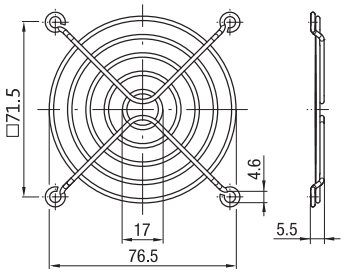


## LZ23 — Fan size 92 x 92

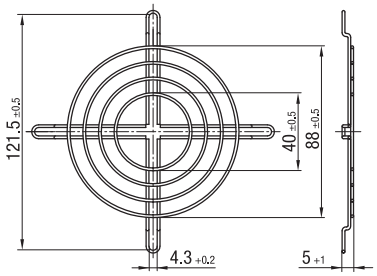


## LZ23-1 — Fan size 92 x 92

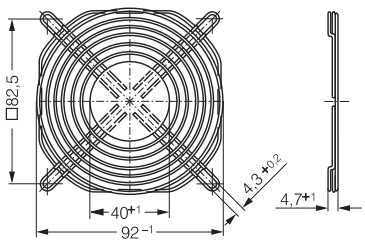


## LZ20 — Fan size 119 x 119

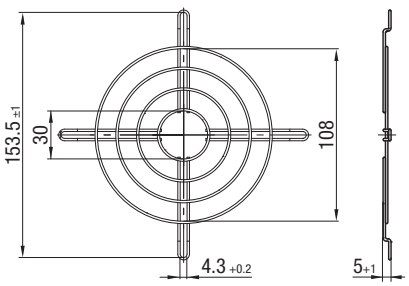


## LZ30 — Fan size 119 x 119

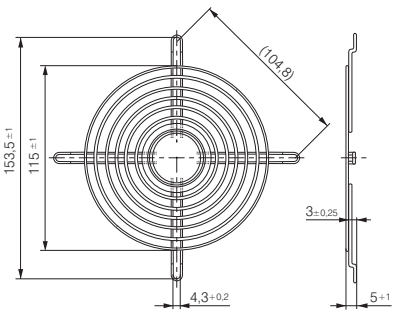

# Finger guards

## LZ30-3 — Fan size 119 x 119

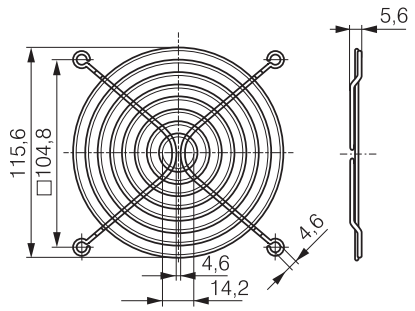


## LZ30-4 — Fan size 119 x 119

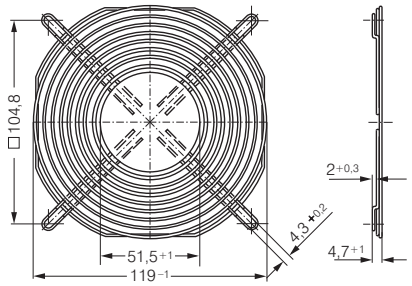


## LZ35 — Fan size 127 x 127

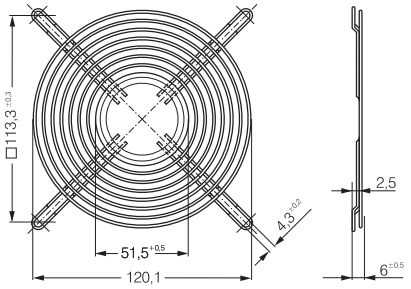


## LZ35-2 — Fan size 127 x 127

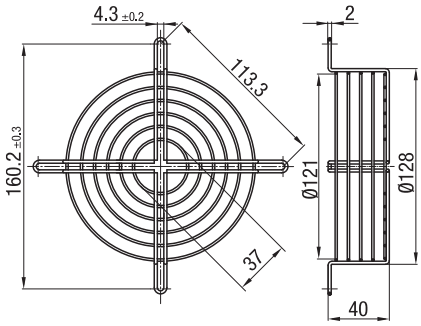


## LZ25 — Fan size 135 x 135

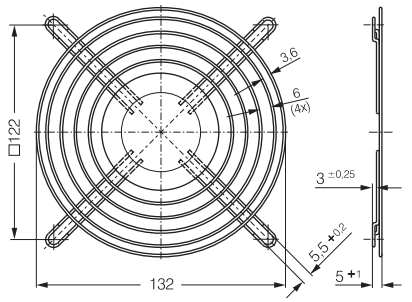


## LZ53 — Fan size 140 x 140

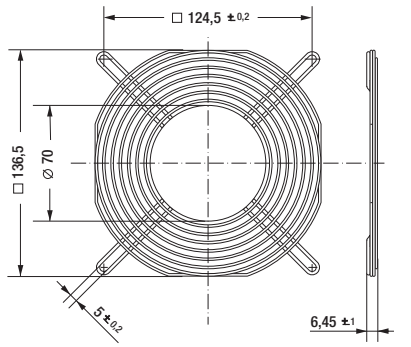


## LZ24 — Fan size Ø 150

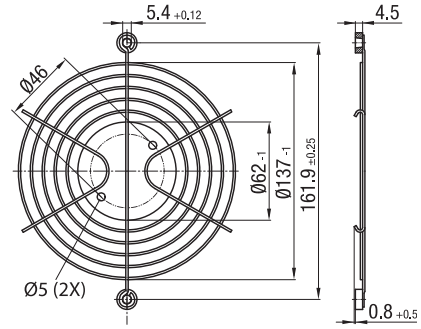


## LZ27 — Fan size Ø 150

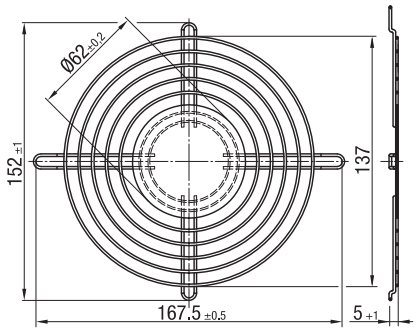


## LZ36 — Fan size Ø 150

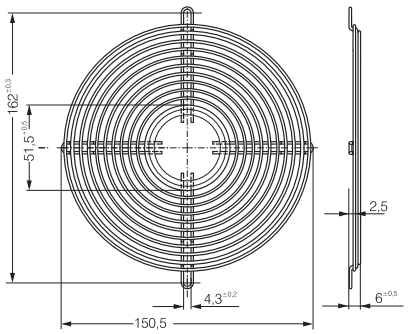


## LZ26 — Fan size Ø 172

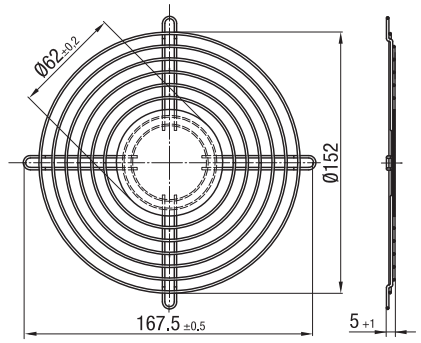


## LZ37 — Fan size Ø 172

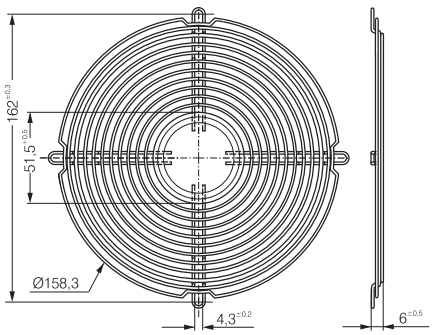


## LZ37-10 — Fan size Ø 172

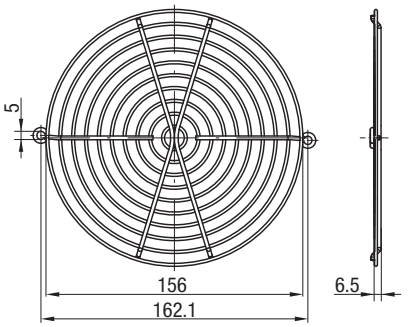




ebmpapst

# Finger guards

## LZ38-1 — Fan unit

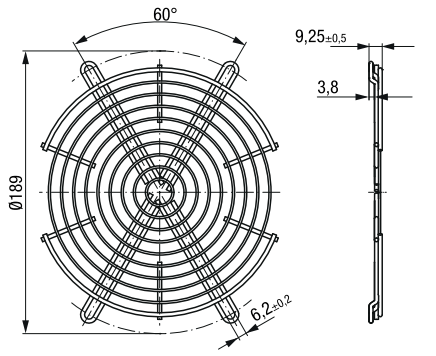


## LZ39 — Fan size Ø 172

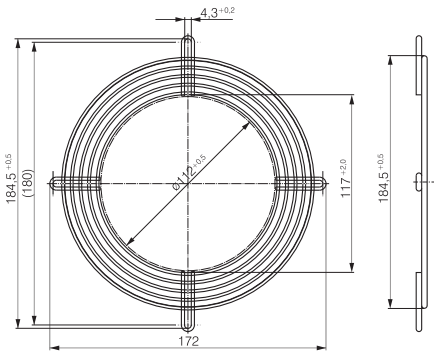


## LZ52 — Fan size Ø 172

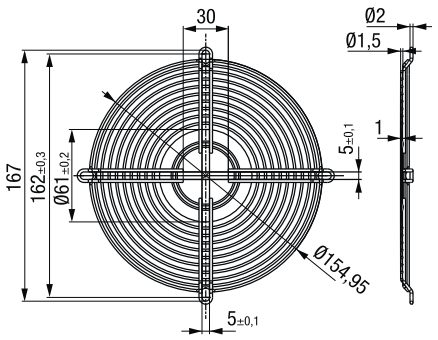


## LZ38 — Fan size 172 x 150 / 172 x 160 / Ø 172

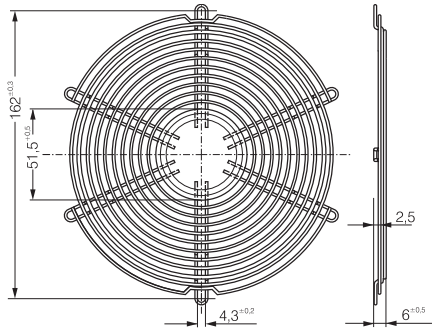


## LZ22 — Fan size 220 x 200

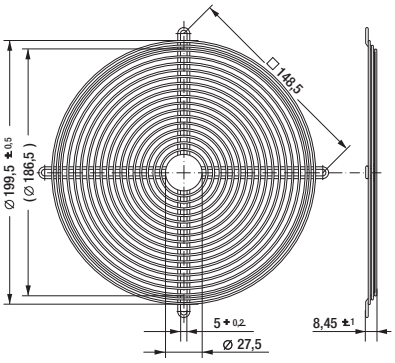

# Finger guards

## ACmaxx / ACi

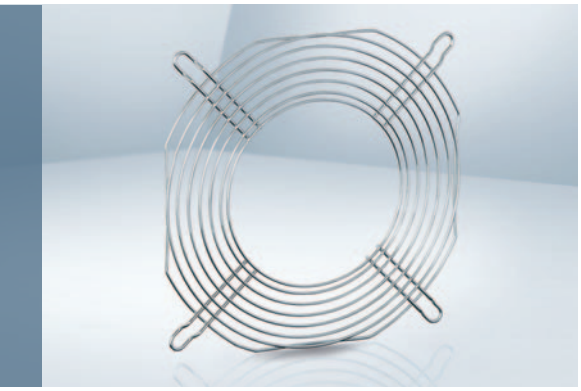

- **Material:** Galvanized or nickel-plated steel wire
- **Note:** Finger guard according to DIN EN ISO 13857 (previously EN 294).
  Finger guards for air outlet described on this page are specifically for fan series ACmaxx.
  For air intake side the standard finger guards with a corresponding dimension can be used.

### Finger guards made of metal

| Fan size | Fan series | Type | Order number | Side | Drawing see page |
|---|---|---|---|---|---|
| 80 x 80 | AC 8300 H | **LZ32-7** | 9920032007 | Outlet side | 259 |
| | AC 8300 H | **LZ22-N** | 9920022001 | Intake side | 255 |
| | | **LZ22-2** | 9920022002 | | |
| | | **LZ32-14** | 9920145006 | | |
| | | **LZ32-4** | 9920032004 | | |
| 92 x 92 | AC 3200 J | **LZ23-6** | 9920023006 | Outlet side | 259 |
| | AC 3200 J | **LZ23** | 9920023000 | Intake side | 255 |
| | | **LZ23-1** | 9920023001 | | |
| 119 x 119 | ACi 4400, ACi 4400 N | **LZ20** | 9920020000 | Intake side | 255 |
| | | **LZ30** | 9920030000 | | |
| | AC 4400 FN | **LZ30-3** | 9920030003 | | 256 |
| | | **LZ30-4** | 9920030004 | | |
| | AC 4400 FN<br>AC 4300 | **LZ30-9** | 9920030009 | Outlet side | 259 |
| Ø 172 | AC 6200 N | **LZ26** | 9920026000 | Intake side | 256 |
| | | **LZ37** | 9920037000 | | 257 |
| | | **LZ37-10** | 9920145004 | | |
| | | **LZ52** | 9920052000 | | |
| | AC 6200 N | **LZ37-2** | 9920037002 | Outlet side | 259 |

Subject to change

All measurements are given in mm.

### Finger guards made of plastic

| Fan size | Fan series | Type | Order number | Side | Drawing see page |
|---|---|---|---|---|---|
| 119 x 119 | AC 4400 FN, AC 4300<br>ACi 4400, ACi 4400 N | **LZ30-5** | 9920030005 | Intake side | 263 |
| | | **LZ30-6** | 9920030006 | | |
| 119 x 119 | ACi 4400, ACi 4400 N | **LZ30-P** | 9920030001 | Intake/Outlet | 263 |

Subject to change

All measurements are given in mm.

# Finger guards

## ACmaxx / ACi

### LZ32-7 — Fan size 80 x 80

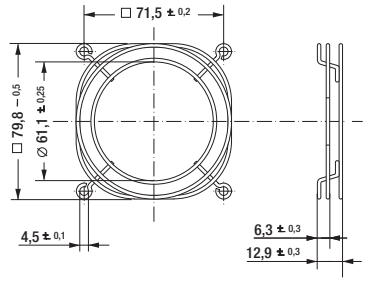


### LZ23-6 — Fan size 92 x 92

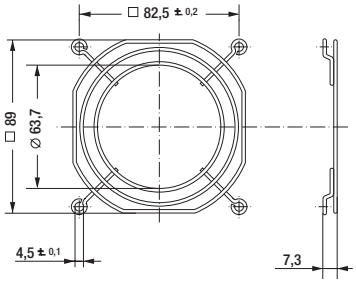


### LZ30-9 — Fan size 119 X 119

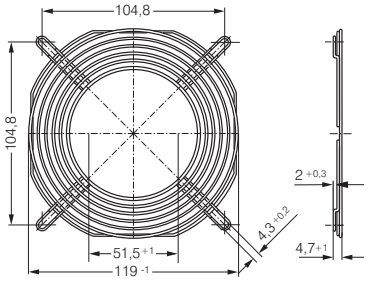


### LZ37-2 — Fan size Ø 172

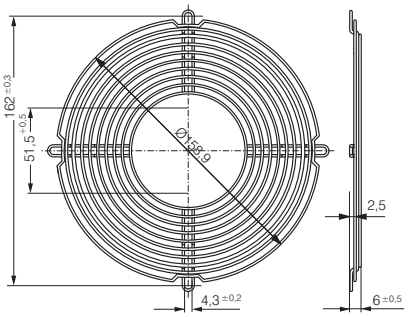

# Finger guards

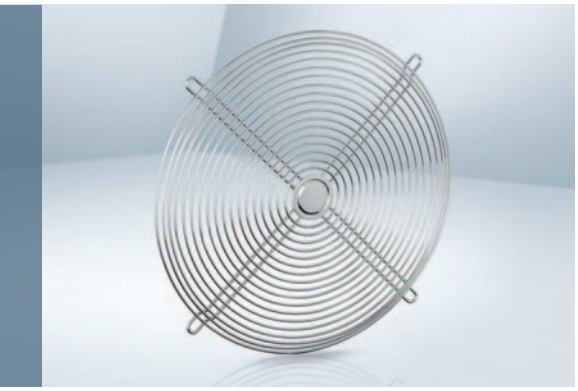

– **Material:** Steel wire, plastic-coated, with silver-metallic gloss

| Fan size | Fan series | Order number | Side | Drawing see page |
|---|---|---|---|---|
| Ø 200 | W3G 200 | 78128-2-4039 | Intake/Outlet | 260 |
| Ø 250 | W1G 250<br>W3G 250 | 09418-2-4039 | Intake/Outlet | 260 |

Subject to change

All measurements are given in mm.

**78128-2-4039** **Fan size 200**

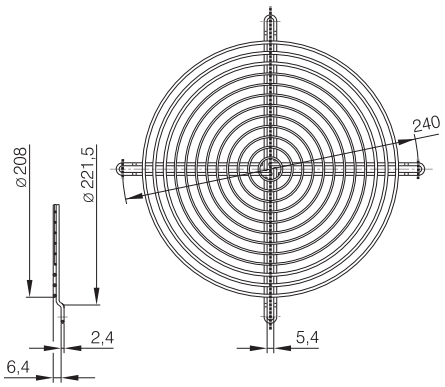


**09418-2-4039** **Fan size 250**

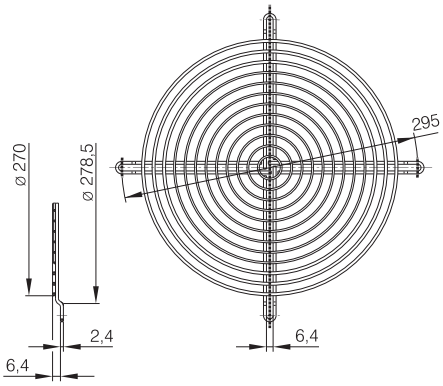




ebmpapst

# Finger guards

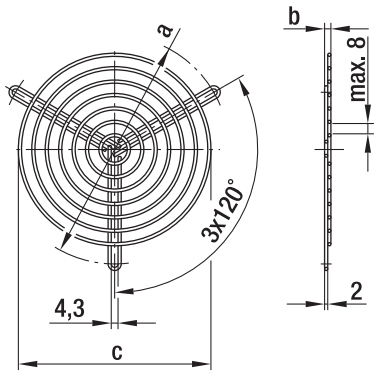


– **Material:** Steel wire

**Finger guards for centrifugal blowers with dual inlet**

| Fan size | Order no. | a | b | c | Coating | Highligts |
|---|---|---|---|---|---|---|
| 097 | 83319-2-4039 | 96.0 | 3.5 | 71.0 | Phosphated, plastic-coated in RAL no. 9005 | for D2E097-CH |
| 097 | 09485-2-4039 | 114.0 | 3.5 | 88.0 | Phosphated, plastic-coated in RAL no. 9005 | for D2E097-B |
| 133 / 146 | 09500-2-4039 | 145.0 | 4.0 | 122.0 | Phosphated, plastic-coated in RAL no. 9005 | |

Subject to change

All measurements are given in mm.

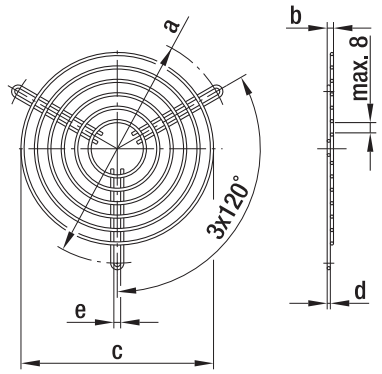


– **Material:** Phosphated steel wire, plastic-coated, silver-metallic gloss

**Finger guards for centrifugal blowers with dual inlet** (versions with EW motor)

| Fan size | Order no. | a | b | c | d | e |
|---|---|---|---|---|---|---|
| 160 | **35000-2-4039** | 182.0 | 12.0 | 144.0 | 2.4 | 4.5 |

Subject to change

All measurements are given in mm.

# Finger guards

– **Material:** Welded screens made of hot-dip galvanized steel, border made of tin (0.4 mm thick)

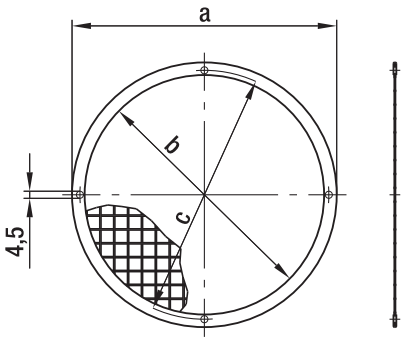


Fan size 160

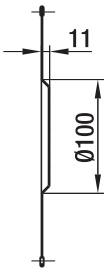


**Finger guards for centrifugal blowers with single inlet**

| Fan size | Order no. | a | b | c | Highligts |
|---|---|---|---|---|---|
| 085 | 09489-2-4039 | 90.0 | 74.0 | 84.0 | 3 drilled holes staggered by 120° |
| 108 | 09490-2-4039 | 126.0 | 110.0 | 118.0 | |
| 120 | 09494-2-4039 | 140.0 | 124.0 | 132.0 | |
| 140 / 146 | 09492-2-4039 | 168.0 | 152.0 | 158.0 | |
| 160 | 09503-2-4039 | 183.0 | 170.0 | 175.0 | see picture fan size 160 |

Subject to change

All measurements are given in mm.

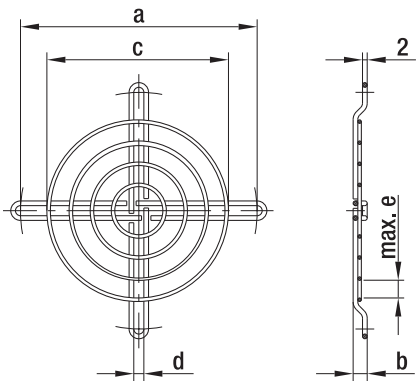


– **Material:** Steel wire

**Finger guards for centrifugal blowers with single inlet**

| Fan size | Order no. | a | b | c | d | e | Coating |
|---|---|---|---|---|---|---|---|
| 076 / 085 | 98214-2-4039 | 101.0 | 6.0 | 79.0 | 4.3 | 8.0 | Plastic coated, silver-metallic gloss |
| 108 | 98214-2-4039 | 120.0 | 3.5 | 88.0 | 4.3 | 8.0 | Plastic coated, silver-metallic gloss |
| 140 / 146 | 25028-2-4039 | 162.0 | 8.5 | 139.0 | 4.3 | 8.0 | Galvanized, chromatized in blue |
| 160 | 17729-2-4039 | 175.0 | 3.5 | 139.0 | 4.6 | 7.0 | Galvanized, chromatized in blue |

Subject to change

All measurements are given in mm.

# Finger guards



- **Material:** Fiberglass-reinforced plastic
- **Note:** Finger guard according to DIN EN ISO 13857 (previously EN 294).
  Plastic guards may not be used for the following models:
  8200 JH3 / JH4
  3200 JH3 / JH4
  4100 NH5 - NH8

| Fan size | Fan series | Type | Order number | B | C | D | E | Mounting |
|---|---|---|---|---|---|---|---|---|
| 60 x 60 | 600 F, 620, 630, 600 N, 600 J | **LZ28-3** | 9920028003 | $60^{-0.5}$ | $50.0^{\pm0.2}$ | 3.0 | 24 | A3 |
| 80 x 80 | 8450, 8400 N, 8300 N, 8200 J, 8000 N, CoR 8200 J | **LZ32-2** | 9920032002 | $80^{-0.5}$ | $71.5^{\pm0.2}$ | 7.0 | 34 | A1 |
| | | **LZ32-P** | 9920032001 | | | | | A2 |
| | | **LZ32-3** | 9920032003 | | | | | A3 |
| 92 x 92 | 3400 N, 3300 N, 3200 J, 3250 J, 3900, 3000 | **LZ23-2** | 9920023002 | $92^{-0.5}$ | $82.5^{\pm0.2}$ | 6.5 | 46 | A1 |
| | | **LZ23-3** | 9920023003 | | | | | A3 |
| 119 x 119 | 4400 F, 4400 FN, 4300 N, 4400, 4100 N, 4000 N, 4000 Z, 9900, DV 4100 | **LZ30-5** | 9920030005 | $119^{-0.5}$ | $105^{\pm0.2}$ | 6.5 | 50 | A2 |
| | | **LZ30-6** | 9920030006 | | | | | A4 |
| | | **LZ30-P** | 9920030001 | | | | | A2 |
| 127 x 127 | 5200 N, DV 5200, 5900 | **LZ33-1** | 9920033001 | $127^{-0.5}$ | $113^{\pm0.2}$ | 6.5 | 50 | A2 |
| | | **LZ33-2** | 9920033002 | | | | | A4 |

Subject to change

All measurements are given in mm.

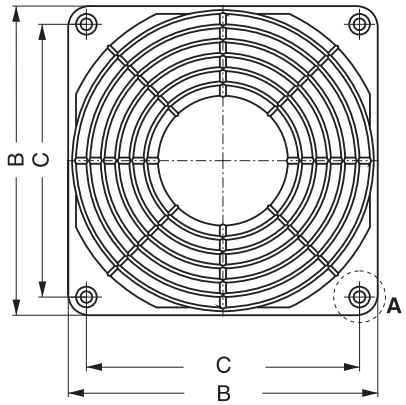


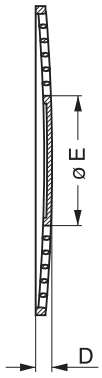


Screw connection

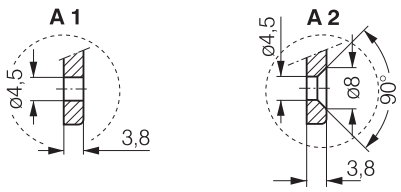


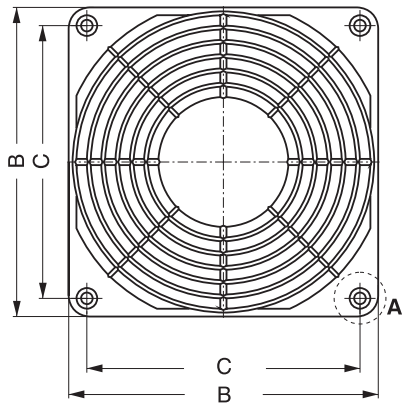


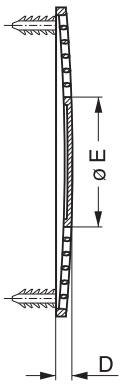


Barbed inserts

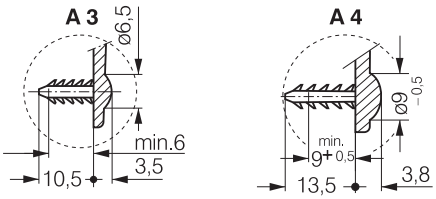


Only suitable for bore hole diameter 4.3 - 4.7.

# Filter fan guards

## 119 x 119

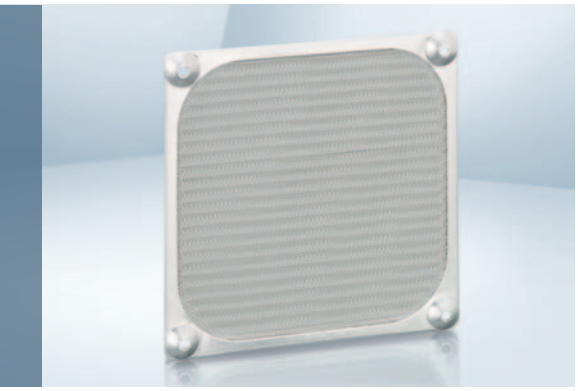

– **Material:** Filter guard LZ40 N: black, fiberglass-reinforced plastic with inserted wire mesh LZ60.
Coarse filter LZ60: stainless steel wire mesh
Mounting lug LZ40-1 for mounting

| DC fan series | AC fan series | ACi fan series |
|---|---|---|
| 4400 F | AC 4300 | ACi 4400 |
| 4400 FN | 9900 | ACi 4400 N |
| 4300 N | 4000 N | |
| 4400 | 4000 Z | |
| 4100 N | AC 4400 FN | |
| DV 4100 | | |

Subject to change

All measurements are given in mm.

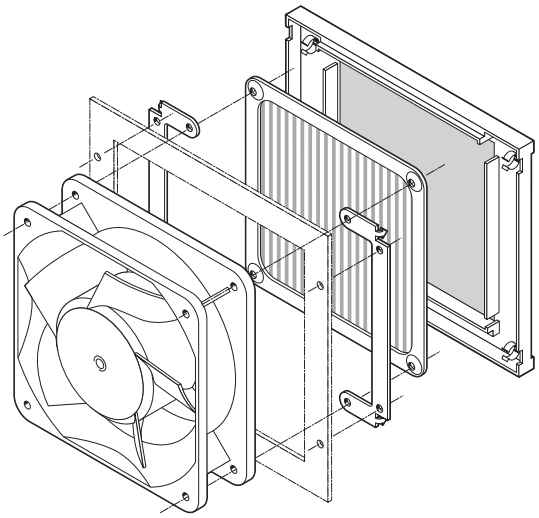

**LZ40N** Filter guard

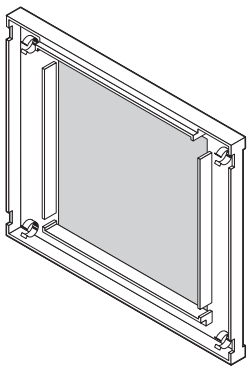

**LZ40-1** Mounting lug

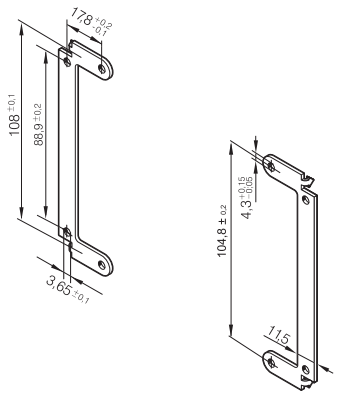


**LZ60** Coarse filter

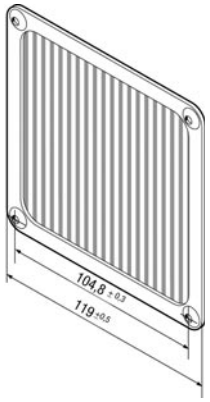




ebmpapst

# Filter fan guards



- **Material:** Guard cover: Injection-molded polycarbonate (PC) with mat surface.
  Mounting plate: wire mesh with black powder coating
  Filter pad: white, synthetically bonded fibers
- **Note:**
  Filter fan guards suitable for fitting on axial fan series in sizes:
  60 mm, 80 mm, 92 mm, 119 mm, ø 172 mm. All filter units fit directly on the existing mounting holes of the fans.
  Filter fan guards consisting of 3 parts: external guard cover, internal mounting plate, and replaceable filter pad.
  The filter pad can be replaced quickly and easily via a quick release on the guard cover.
  The filter pads can be replaced even while the fan is running, as protection is provided by the welded wire mesh.

| Fan size | Fan series | Type | Order number | A | B | C | D | Replacement filter* |
|---|---|---|---|---|---|---|---|---|
| 60 x 60 | 600 F, 620, 630, 600 N, 600 J | **FF60** | 9920034001 | 65 | 65 | 13.5 | 50.0 | **RF 60** |
| 80 x 80 | 8450, 8400 N, 8300 N, 8200 J, 8000 N, CoR 8200 J | **FF80** | 9920034002 | 85 | 85 | 14.0 | 71.5 | **RF 80** |
| 92 x 92 | 3400 N, 3300 N, 3200 J, 3250 J, 3900, 3000 | **FF92** | 9920034003 | 125 | 105 | 17.5 | 82.5 | **RF 92** |
| 119 x 119 | 4400 F, 4400 FN, 4300 N, 4400, 4100 N, 4000 N, 4000 Z, 9900, DV 4100 | **FF119** | 9920034004 | 162 | 136 | 18.5 | 104.5 | **RF 119** |
| Ø 172<br>172 x 150<br>172 x 160 | DV 6300, 6300, 6300 N, 6300 TD, 6300 NTD, DV 6300 TD, DV 6400, 6400, 6400 TD, DV 6400 TD | **FF172** | 9920034005 | 226 | 190 | 19.5 | 162.0 | **RF 172** |

Subject to change

* Replacement filter available only in packages of 5.

All measurements are given in mm.

## FF60 / FF80

Fan size: 60 x 60 mm / 80 x 80 mm

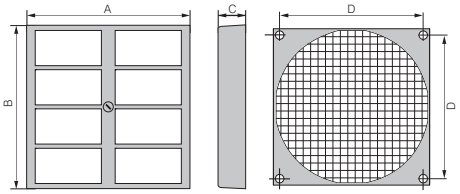


## FF92 / FF 119

Fan size: 92 x 92 mm / 119 x 119 mm

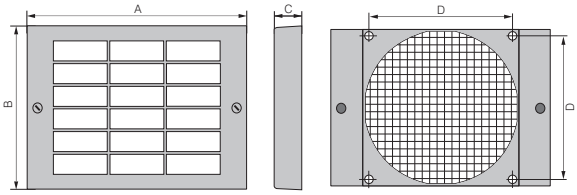


### Filter performance

The filter fan guard filters 75 % of dust particles with a size of 5-10 microns and can withstand temperatures of up to 100 °C. Filter class G3 according to DIN EN 779. Flame-retardant according to DIN 53438, class F1. When a clean filter is installed, a reduction of air flow of 20-30 % is possible.

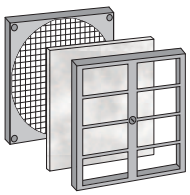

## FF 172

Fan size: Ø 172 mm

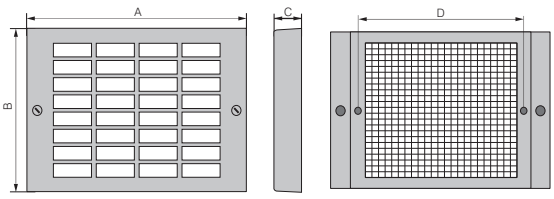

# Finger guards

## For compact centrifugal modules



- **Material:** PA plastic, fiberglass-reinforced
- **Highlights:** Flame protection class in line with UL 94V-0

| Fan size | Fan series | Type | Order number | a | b |
|---|---|---|---|---|---|
| Ø 190 | RG 190 TD | **LZ46-1** | 9920046001 | 133 | 9.0 |
| Ø 220 | RG 220 TD | **LZ47-1** | 9920047001 | 166 | 8.7 |
| Ø 225 | RG 225 TD | **LZ48-1** | 9920048001 | 158 | 8.7 |

Subject to change

All measurements are given in mm.

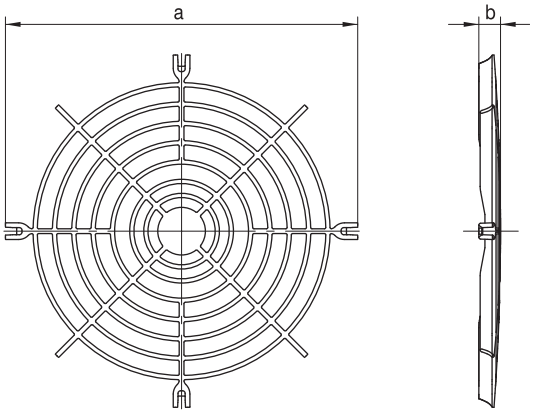

# Air inlet grill

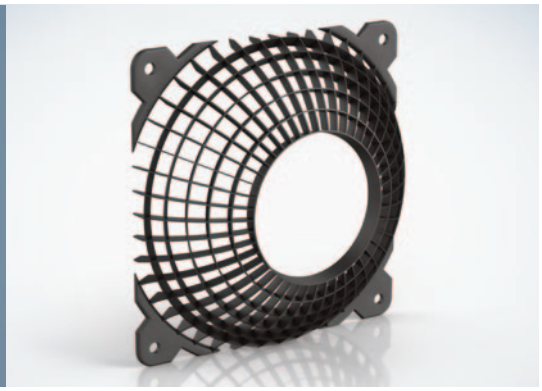

- **Material:** PA plastic, fiberglass-reinforced
- **Note:** For axial and diagonal fans
  Assembled on the air intake, the fan grid reduces the noise emission dramatically and minimizes disturbing low frequency sound.

| Fan size | Fan series | Type | Order number | Side | Drawing see page |
|---|---|---|---|---|---|
| 119 x 119 | ACi 4400, ACi 4400 N, 4400, 4400 F, 4400 FN, AC 4400 FN, AC 4300, 4300 N, 4100 N, 4000 N, 4000 Z, 9900, DV 4100 | **FG 119** | 9920070000 | Intake side | 265 |

Subject to change

All measurements are given in mm.

**FG 119** **Fan size 119 x 119**

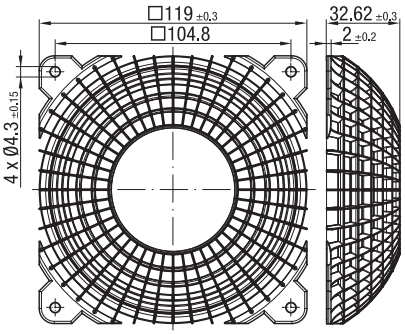

# Inlet rings

## For centrifugal fans

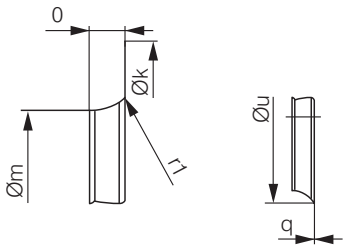


Vers. 1

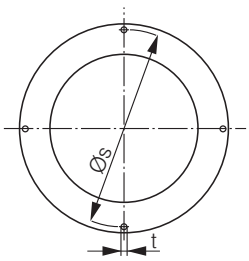


Vers. 2

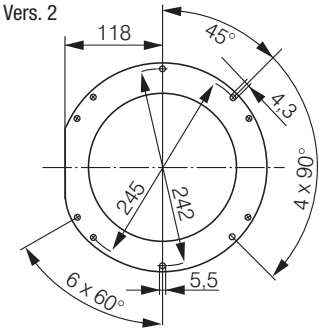


– **Material:**
Galvanized sheet steel

### Inlet rings for backward curved centrifugal fans

| Fan size[1] | Type | Order number | Version | k | m | o | q | $r_1$ | s | t | u |
|---|---|---|---|---|---|---|---|---|---|---|---|
| RER 120 (S)/ 120 (P) | **LZ 1000-120** | 96120-2-4013 | 1 | 146.0 | 94.4 | 18.0 | 0.80 | 16.0 | 134.0 | 4x4.5 | 126.0 |
| RER 133 (P) | **LZ 1000-133** | 09566-2-4013 | 1 | 129.0 | 87.0 | 13.0 | 1.00 | 8.0 | 118.0 | 4x4.5 | 103.0 |
| RER 160 (S) | **LZ 1000-160** | 09569-2-4013 | 1 | 142.0 | 100.0 | 9.0 | 1.00 | 8.0 | 132.0 | 4x4.5 | — |
| RER 175/190 (P) | **LZ 1000-175** | 09576-2-4013 | 1 | 170.0 | 125.5 | 14.0 | 1.25 | 10.0 | 158.0 | 4x4.5 | 146.0 |
| RER 220 TD (P) | **LZ 1000-220** | 09609-2-4013 | 2 | 252.0 | 155.0 | 21.0 | 0.80 | 21.8 | 242.0 | 6x5.5 | 119.0 |
| RER 225 TD (P) | **LZ 1000-225** | 96358-2-4013 | 1 | 223.0 | 146.0 | 28.0 | 1.50 | 25.0 | 210.0 | 4x4.5 | 196.0 |

Subject to change

(1) Fan size with key for impeller material: (P) = plastic, (S) = sheet steel, (A) = aluminum

All measurements are given in mm.

Vers. 1

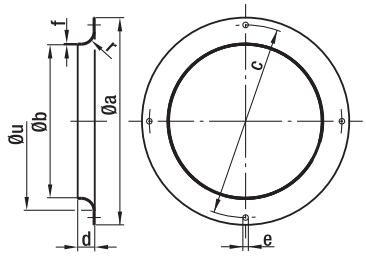


Vers. 2

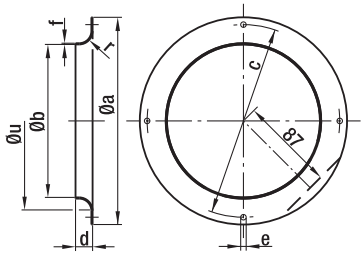


### Inlet rings for forward curved centrifugal fans

| Fan size | Order number | Version | a | b | c | d | e | f | r | u | Highlights |
|---|---|---|---|---|---|---|---|---|---|---|---|
| 085 | 09560-2-4013 | 1 | 92.0 | 63.4 | 84.0 | 6.0 | 3x4.2 | 0.80 | 6.8 | — | 3 drilled holes staggered by 120° |
| 097 | 09563-2-4013 | 1 | 116.0 | 80.0 | 108.0 | 10.0 | 3x4.5 | 0.80 | 10.0 | — | 3 drilled holes staggered by 120° |
| 108 | 09566-2-4013 | 1 | 129.0 | 87.0 | 118.0 | 13.0 | 4x4.5 | 1.00 | 8.0 | — | |
| 120 | 09569-2-4013 | 1 | 142.0 | 100.0 | 132.0 | 9.0 | 4x4.5 | 1.00 | 8.0 | — | |
| 133 | 09572-2-4013 | 1 | 150.0 | 112.0 | 142.0 | 12.0 | 4x4.5 | 1.00 | 10.0 | — | |
| 140 / 146 | 09576-2-4013 | 1 | 170.0 | 125.5 | 158.0 | 14.0 | 4x4.5 | 1.25 | 10.0 | — | |
| 160 | 09588-2-4013 | 2 | 185.0 | 130.0 | 175.0 | 17.0 | 4x4.5 | 0.75 | 12.0 | — | |

Subject to change

All measurements are given in mm.



ebmpapst

# Inlet rings / air filter

## For centrifugal fans

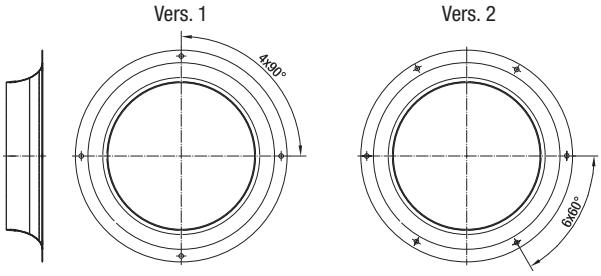


**Material:** Galvanized sheet steel

**Inlet rings without measuring device for backward curved centrifugal fans**

| Fan size | Order number | Version | Dimensions |
|---|---|---|---|
| 190 | 09576-2-4013 | 1 | See corresponding product page |
| 220 | 09609-2-4013 | 2 | See corresponding product page |
| 225 | 96358-2-4013 | 1 | See corresponding product page |
| 250 | 96359-2-4013 | 1 | See corresponding product page |
| 280 | 28000-2-4013 | 1 | See corresponding product page |
| 310 | 31000-2-4013 | 1 | See corresponding product page |

Subject to change

All measurements are given in mm.

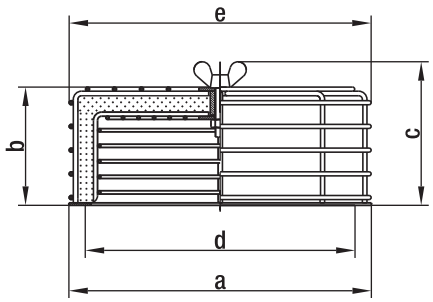


- **Material:** Steel wire or sheet steel, plastic coated in RAL no. 9005, black
- **Filter:** Viledon filter type R: PSB / 29 OS (according to DIN 24185)
  Separation capacity: < 86 %
  Efficiency: < 20 %
  Dust binding capacity: 650 g/m²

**Air filters for centrifugal blowers** (with die-cast aluminum housing)

| Fan size | Order number | a | b | c | d | e | Replacement filter |
|---|---|---|---|---|---|---|---|
| 108 / 120 | 95777-1-5171 | 142.0 | 66.0 | 83.0 | 118-132 | 145.0 | 95779-1-5171 |
| 140 / 146 / 160 | 95778-1-5171 | 185.0 | 74.0 | 91.0 | 158-175 | 185.0 | 95780-1-5171 |

Subject to change

All measurements are given in mm.

# Cables



- Cable with molded plug connection in varying lengths.
- Wire end with wire end ferrules, crimped ferrules, or tin-plated.
- Straight or angled plug.
- For all fan types with flat plug 2.8 / 3.0 x 0.5.

| Order number | Type | L1 (mm) | Wires | Plug | Wire end | Flat push-on receptacle | Application |
|---|---|---|---|---|---|---|---|
| 9920120000 | **LZ120** | 610 | 0.5 mm² | G | C | 2.8 x 0.5 | AC |
| 9920120004 | **LZ120-4** | 2 000 | 0.5 mm² | G | A | 2.8 x 0.5 | AC |
| 9920120005 | **LZ120-5** | 380 | 0.5 mm² | W | B | 2.8 x 0.5 | DC |
| 9920120006 | **LZ120-6** | 610 | 0.5 mm² | W | B | 2.8 x 0.5 | DC |
| 9920120010 | **LZ120-10** | 2 500 | 0.5 mm² | G | B | 2.8 x 0.5 | AC |
| 9920120011 | **LZ120-11** | 2 000 | 0.5 mm² | G | A | 2.8 x 0.5 | DC |
| 9920120013 | **LZ120-13** | 5 000 | 0.5 mm² | G | B | 2.8 x 0.5 | AC |
| 9920120016 | **LZ120-16** | 800 | 0.5 mm² | G | B | 2.8 x 0.5 | AC |
| 9920120017 | **LZ120-17** | 3 000 | 0.5 mm² | G | A | 2.8 x 0.5 | AC |
| 9920120018 | **LZ120-18** | 4 000 | 0.5 mm² | G | A | 2.8 x 0.5 | AC |
| 9920126000 | **LZ126** | 1 000 | 0.5 mm² | G | C | 2.8 x 0.5 | AC |
| 9920127000 | **LZ127** | 1 600 | 0.5 mm² | G | B | 2.8 x 0.5 | AC |
| 9920130001 | **LZ130-1** | 610 | 0.82 mm² | G | C | 2.8 x 0.5 | AC * |
| 9920140000 | **LZ140** | 610 | 0.73 mm² | G | B | 2.8 x 0.8 | AC |

All measurements are given in mm. * UL-approved

**Cable** **Straight plug (G)**

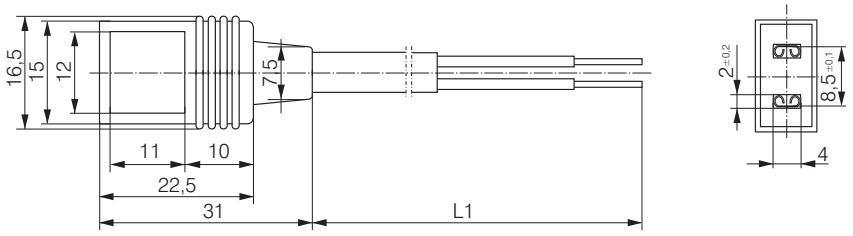


**Cable** **Angled plug (W)**

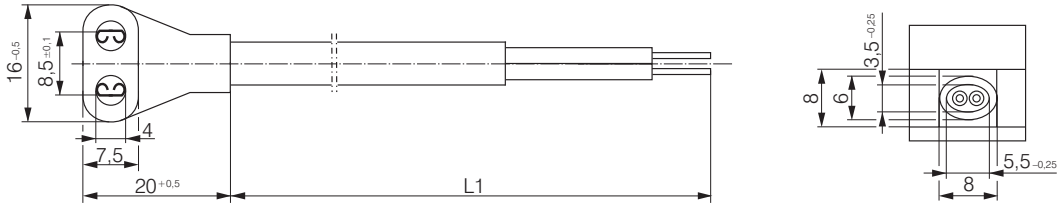


**Wire end ferrules** **Wire end A**

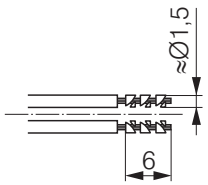


**Tin-plated** **Wire end B**

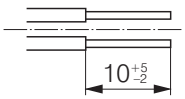


**Wire end ferrules** **Wire end C**

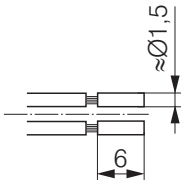




ebmpapst

# Cable (ESM) / Handheld Programmer

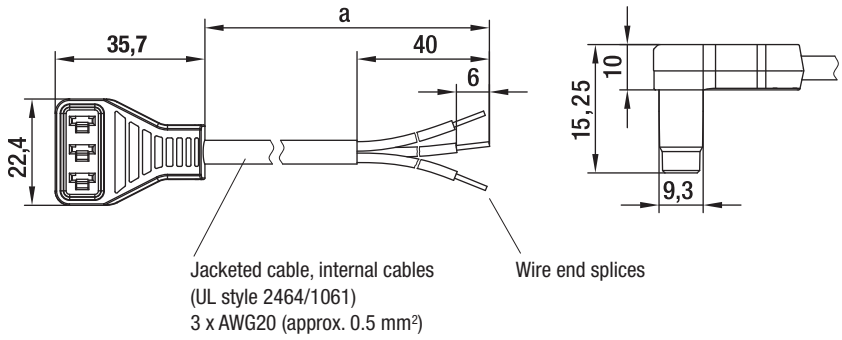


– **Design:** Cable conforms to UL standards sealed plug. Customized cables on request.

**Cables for energy-saving motors 115/230 VAC**

| Order number | a |
|---|---|
| **13060-4-1040** | 450 |
| **13061-4-1040** | 1500 |

Subject to change




– **Easy speed programming**
– **Battery operated**
– **User-friendly navigation menu**
– **Protective cover with folding stand**

**For Energy Saving Motor (ESM) based products**

| Order number |
|---|
| **CBC 000-AF08-01** |

Subject to change

Makes quick work of programming the two ESM adjustable operating speeds. Eliminates the need for a PC, software adapter and second cable. Especially for use in production or by sales representatives. Automatic shut-off function for extended battery life.
Mini USB plug for downloading software updates. Batteries, programming cable, and operating instructions included in scope of delivery.

# Accessories

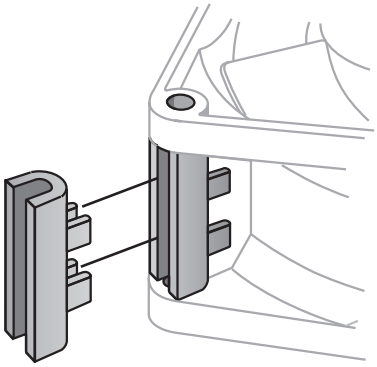

In addition to the accessories and installation parts listed here, ebm-papst also supplies a number of additional, sometimes very special parts for fans. Our company sales team is happy to offer you their expert assistance with all your questions regarding the installation and use of our fans.

| Fan series | Type | Order number |
|---|---|---|
| 4300 N | **LZ212** | 9920212000 |
| 3400 N, 4400 F,<br>8400 N, 8450 | **LZ261** | 9920261000 |
| 4000, 5100, 5200, 5600,<br>5900, 7100, 7200, 9000 | **LZ210** | 9920210000 |
| 6200, 6300, 6300 N, 6400,<br>7100, 7200 | **LZ215** | 9920215000 |
| For all temperature-controlled fans | **LZ370** | 4871104201 |
| For all fans with mounting holes | **LZ550** | 6030020000 |
| of 4.3 mm | **LZ551** | 6030053002 |

Subject to change

## LZ212

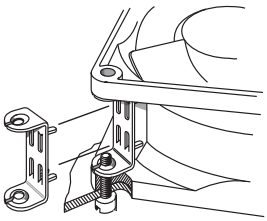

Screw clip of rustproof spring steel.
For mounting fans with threaded pin 3.5 DIN EN ISO 1478 (7970).

## LZ261

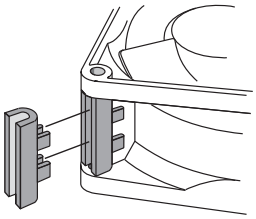

Spacer of fiberglass-reinforced plastic.
For mounting with screws through both fan mounting flanges.

## LZ210



Screw clip of hardened steel.
For mounting fans with threaded pin 6-32 UNC or 3.5 DIN 7970.

## LZ370

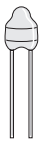

Required performance data:

| | |
|---|---|
| $R_{25}$ | = 100 KΩ ±5% @25°C |
| B-value | = 4190 ±2% |
| $P_{max}$ | = 0,25 W |

Temperature sensor for speed-controlled fan operation. Temperature range 30...50 °C.

## LZ550

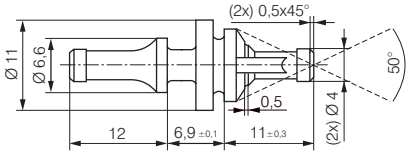


Rubber anti-vibration mounts
for fans with a hole diameter of 4.3 ±0.2 mm and flange thickness of 3 to 5.5 mm.
For a carrier plate with a hole diameter of 6.5 ±0.15 mm and plate thickness of 1 to 2 mm.

## LZ551

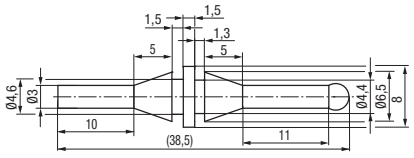


Rubber anti-vibration mounts
for fans with a hole diameter of 4.3 ±0.2 mm and flange thickness of 2 to 4 mm.
For a carrier plate with a hole diameter of 4.4 ±0.15 mm and plate thickness of 1 to 2 mm.

# Connection diagrams EC E)

**Technical features** (nominal voltage 24 / 48 VDC)**:**

- Tach output
- Motor current limitation
- Soft start
- Control input 0-10 VDC / PWM
- Overvoltage detection
- Thermal overload protection for electronics
- Reverse polarity protection

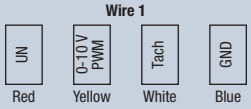


| Wire | Designation | Color | Assignment/function |
|---|---|---|---|
| 1 | UN +24 VDC | Red | Power supply 24 VDC, supply voltage ripple ± 3.5 % |
| | 0-10V /PWM | Yellow | Control input Re > 40 K |
| | Tach | White | Tach output, 3 pulses per revolution, Isink max. = 10 mA |
| | GND | Blue | Reference ground |

# Connection diagrams EC G)

**Technical features** (nominal voltage 24 / 48 VDC)**:**

- Tach output
- Soft start
- Control input 0-10 VDC / PWM

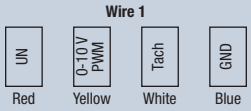


| Wire | Designation | Color | Assignment/function |
|---|---|---|---|
| 1 | UN +24 VDC | Red | Power supply 24/48 VDC, supply voltage ripple ± 3.5 % |
| | 1-10V /PWM | Yellow | Control input Re > 100 K |
| | Tach | White | Tach output:<br>2 pulses/revolution (M1G045/M1G055)<br>3 pulses/revolution (M1G074/M1G084) |
| | GND | Blue | Reference ground |

# Connection diagrams EC H3)

**Technical features** (M3G 055 with 2 speed stages)**:**

- Speed setting input (230V)
- Power limitation
- Motor current limitation
- Soft start
- Thermal overload protection for electronics / motor
- Line undervoltage detection

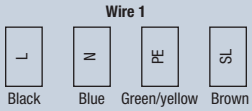


| Wire | Designation | Color | Assignment/function |
|---|---|---|---|
| 1 | L | Black | Power supply 230 VAC, 50 - 60 Hz, see type plate for voltage range |
| | N | Blue | Neutral conductor |
| | PE | Green/yellow | Ground conductor |
| | SL | Brown | Speed selection: switch open = speed 1; switch closed = speed 2 |

# Connection diagrams EC H4)

**Technical features** (M3G 055 speed-controlled)**:**

- Output 10 VDC max. 1.1 mA
- Tach output
- Power limitation
- Motor current limitation
- Soft start
- Control input 0-10 VDC / PWM
- Control interface with SELV potential safely disconnected from the mains
- Overvoltage detection
- Thermal overload protection for electronics / motor
- Line undervoltage detection

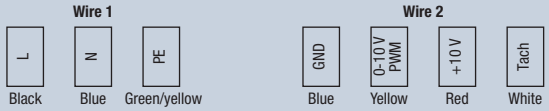


| Wire | Designation | Color | Assignment/function |
|---|---|---|---|
| 1 | L | Black | Power supply 115/230 VAC, 50 - 60 Hz, see type plate for voltage range |
| | N | Blue | Neutral conductor |
| | PE | Green/yellow | Ground conductor |
| 2 | GND | Blue | GND - Connection for control interface |
| | 0-10 V PWM | Yellow | Control input 0-10 V or PWM, electrically isolated |
| | 10 V/max. 1,1 mA | Red | Voltage output +10 V / 1.1 mA, electrically isolated, not short-circuit-proof |
| | Tach | White | Tach output: Open collector, 1 pulse per revolution, electrically isolated |

# Connection diagrams EC J5)

**Technical features** (nominal voltage 24 / 48 VDC)**:**

- Control input 0-10 VDC / PWM
- Output 10 VDC max. 1.1 mA
- Power limitation
- Soft start
- Motor current limitation
- Tach output
- Thermal overload protection for electronics / motor
- Overvoltage detection
- Line undervoltage detection
- Control interface with SELV potential safely disconnected from the mains

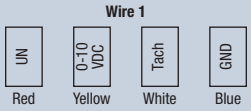


| Wire | Designation | Color | Assignment/function |
|---|---|---|---|
| 1 | UN +24/48 VDC | Red | Power supply 24/48 VDC, supply voltage ripple ± 3.5 % |
| | 0-10 VDC | Yellow | Control input Re >100 K |
| | Tach | White | Tach output, 3 pulses per revolution, Isink max. = 10 mA |
| | GND | Blue | Reference ground |

# Connection diagrams EC Q)

**Technical features:**

- Tach output
- Motor current limitation
- Soft start
- Control input 0-10 VDC / PWM
- Overvoltage detection
- Thermal overload protection for electronics
- Reverse polarity protection

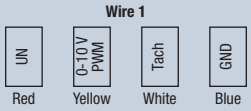


| Wire | Designation | Color | Assignment/function |
|---|---|---|---|
| 1 | UN +12/24 VDC | Red | Power supply 12/24 VDC, supply voltage ripple ± 3.5 % |
| | PWM/LIN | Yellow | Control input Re > 40 K |
| | Tach | White | Tach output, 3 pulses per revolution, Isink max. = 10 mA |
| | GND | Blue | Reference ground |

# Connection diagrams EC R)

**Technical features:**

- Tach output
- Motor current limitation
- Soft start
- Control input 0-10 VDC / PWM
- Overvoltage detection
- Thermal overload protection for electronics
- Reverse polarity protection

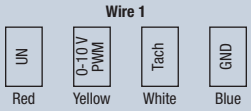


| Wire | Designation | Color | Assignment/function |
|---|---|---|---|
| 1 | UN +48 VDC | Red | Power supply 48 VDC, supply voltage ripple ± 3.5 % |
| | 0-10V /PWM | Yellow | Control input Re > 100 K |
| | Tach | White | Tach output, 3 pulses per revolution, Isink max. = 10 mA |
| | GND | Blue | Reference ground |

# Connection diagrams AC
# A1) / A3) / C2)

**A1) Single-phase capacitor motor** (1~ 115/230 VAC power line)
with thermal overload protector wired internally

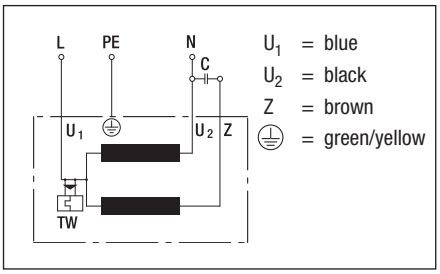


**A3) Single-phase capacitor motor** (1~ 115/230 VAC power line)
with thermal overload protector wired internally

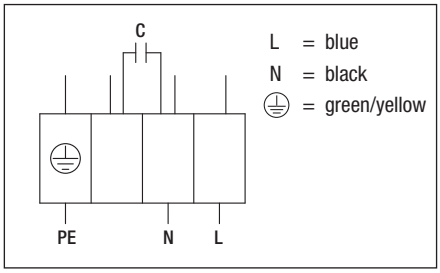


**C2) Star connection** (3~ 400 VAC power line)
without thermal overload protector

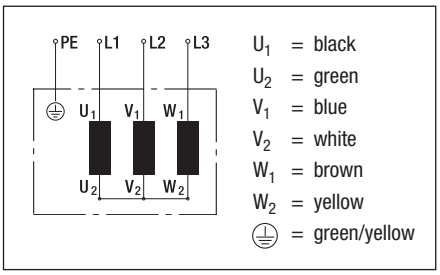

# Connection diagrams AC J7)

**J7) Energy-saving motor (ESM)** (1~ 115/230 VAC power line)

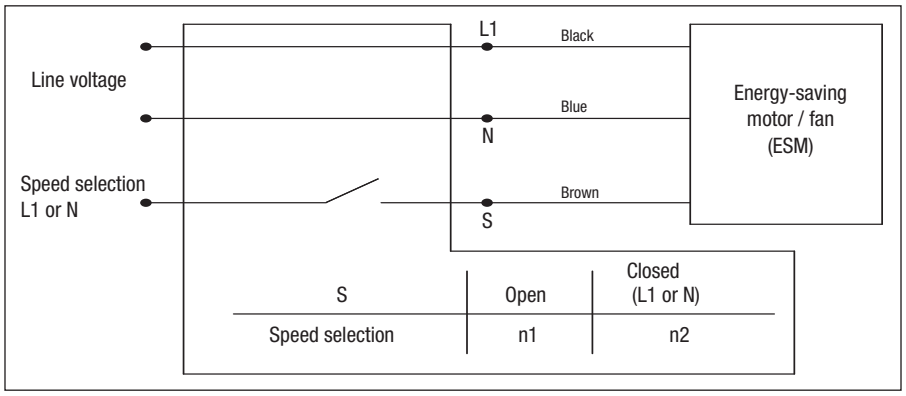

# ebm-papst in Germany

**ebm-papst Mulfingen GmbH & Co. KG**
Bachmühle 2
74673 Mulfingen
GERMANY
Phone +49 7938 81-0
Fax +49 7938 81-110
info1@de.ebmpapst.com

**ebm-papst St. Georgen GmbH & Co. KG**
Hermann-Papst-Straße 1
78112 St. Georgen
GERMANY
Phone +49 7724 81-0
Fax +49 7724 81-1309
info2@de.ebmpapst.com

**ebm-papst Landshut GmbH**
Hofmark-Aich-Straße 25
84030 Landshut
GERMANY
Phone +49 871 707-0
Fax +49 871 707-465
info3@de.ebmpapst.com

**Berlin**
Dipl.-Ing. (TH) Jens Duchow
Händelstraße 7
16341 Panketal
GERMANY
Phone +49 30 944149-62
Fax +49 30 944149-63
Jens.Duchow@de.ebmpapst.com

**Bielefeld**
Dipl.-Ing. (FH) Wolf-Jürgen Weber
Niehausweg 13
33739 Bielefeld
GERMANY
Phone +49 5206 91732-31
Fax +49 5206 91732-35
Wolf-Juergen.Weber@de.ebmpapst.com

**Dortmund**
Dipl.-Ing. (FH) Hans-Joachim Pundt
Auf den Steinern 3
59519 Möhnesee-Völlinghausen
GERMANY
Phone +49 2925 800-407
Fax +49 2925 800-408
Hans-Joachim.Pundt@de.ebmpapst.com

**Frankfurt**
Dipl.-Ing. Christian Kleffmann
Dr.-Hermann-Krause-Straße 23
63452 Hanau
GERMANY
Phone +49 6181 1898-12
Fax +49 6181 1898-13
Christian.Kleffmann@de.ebmpapst.com

**Halle**
Dipl.-Ing. (TU) Michael Hanning
Lercheneck 4
06198 Salzatal / OT Lieskau
GERMANY
Phone +49 345 55124-56
Fax +49 345 55124-57
Michael.Hanning@de.ebmpapst.com

**Hamburg**
Ingenieurbüro Breuell GmbH
Ing. Dirk Kahl
Elektroingenieur
Oststraße 96
22844 Norderstedt
GERMANY
Phone +49 40 538092-19
Fax +49 40 538092-84
Kahl@breuell-hilgenfeldt.de

**Heilbronn / Heidelberg**
Wolfgang Richter
Büttelsbergweg 18
97980 Bad Mergentheim-Rengershausen
GERMANY
Phone +49 7937 32200-33
Fax +49 7938 81-110
Wolfgang.Richter@de.ebmpapst.com

**Kassel**
Dipl.-Ing. (FH) Ralph Brück
Hoherainstraße 3 b
35075 Gladenbach
GERMANY
Phone +49 6462 4071-10
Fax +49 6462 4071-11
Ralph.Brueck@de.ebmpapst.com

**Koblenz**
Winfried Schaefer
Hinter der Kirch 10
56767 Uersfeld
GERMANY
Phone +49 2657 16-96
Fax +49 2657 16-76
Winfried.Schaefer@de.ebmpapst.com

**Munich**
Dipl.-Wirt.-Ing. (FH) Jens Peter
Landsbergerstraße 14
86932 Pürgen
GERMANY
Phone +49 7971 91909-49
Fax +49 7971 91909-51
Jens.Peter@de.ebmpapst.com

**Nuremberg**
Dipl.-Wirt.-Ing. (FH) Axel Resch
Dr.-August-Koch-Str. 1
91639 Wolframs-Eschenbach
GERMANY
Phone +49 9875 9783-170
Fax +49 9875 9783-171
Axel.Resch@de.ebmpapst.com

**Offenburg**
Dipl.-Ing. (FH) Ralf Braun
Hubeneck 21
77704 Oberkirch
GERMANY
Phone +49 7802 9822-52
Fax +49 7802 9822-53
Ralf.Braun@de.ebmpapst.com

**Stuttgart**
Dipl.-Ing. (FH) Rudi Weinmann
Hindenburgstraße 100/1
73207 Plochingen
GERMANY
Phone +49 7153 9289-80
Fax +49 7153 9289-81
Rudi.Weinmann@de.ebmpapst.com

**Ulm**
M.Sc. Reinhard Sommerreißer
Einsteinstraße 7a
86674 Baar / Schwaben
GERMANY
Phone +49 8276 5899-775
Fax +49 8276 5899-776
Reinhard.Sommerreisser@de.ebmpapst.com

## Distributors

**Frankfurt / Neu-Isenburg**
Arrow Central Europe GmbH
Frankfurter Straße 211
63263 Neu-Isenburg
GERMANY
Phone +49(0)6102/5030-0
Fax +49(0)6102/5030-8455
E-Mail: info@arrowce.com

**Gerlingen**
Scheffel
elektrotechnischer Vertrieb GmbH
Aischbach 1
70839 Gerlingen
GERMANY
Phone +49 7156 28357
Fax +49 7156 49425
info@ebmpapst-service.de

**Hirschau**
Conrad Electronic SE
Klaus-Conrad-Str. 1
92240 Hirschau
GERMANY
Phone +49 9622 300
Fax +49 180 5 312110
kundenservice@conrad.de
www.conrad.de

**Hamburg**
Breuell + Hilgenfeldt GmbH
Oststraße 96
22844 Norderstedt
GERMANY
Phone +49 40 538092-20
Fax +49 40 538092-84
info@breuell-hilgenfeldt.de

**Klausdorf**
ETB Electronic Team
Beratungs- u. Vertriebs GmbH
Zossener Straße 27
15838 Klausdorf
GERMANY
Phone +49 33703 69-0
Fax +49 33703 69-149
info@etb-electronic.de
www.etb-electronic.de

# ebm-papst in Europe



**Munich**
A. Schweiger GmbH
Ohmstraße 1
82054 Sauerlach
GERMANY
Phone +49 8104 897-0
Fax +49 8104 897-90
info@schweiger-gmbh.de
www.schweiger-gmbh.com

Bürklin GmbH & Co.KG
Grünwalder Weg 30
82041 Oberhaching
GERMANY
Phone +49 89/55875-0
Fax +49 89/55875-421
info@buerklin.com
www.buerklin.com

Multi-Bauelemente-Service
Vertrieb von elektr. Bauelementen GmbH
Römerstraße 8
85661 Forstinning
GERMANY
Phone +49 8121 2506-0
Fax +49 8121 2506-200
multi.bauelemente@mbs.to

● *Express* **Service-Center** (1 to 5 pieces)

**North**
Breuell + Hilgenfeldt GmbH
Oststraße 96
22844 Norderstedt
GERMANY
Phone +49 40 538092-20
Fax +49 40 538092-84
info@breuell-hilgenfeldt.de

**South**
Scheffel
elektrotechnischer Vertrieb GmbH
Aischbach 1
70839 Gerlingen
GERMANY
Phone +49 7156 28357
Fax +49 7156 49425
info@ebmpapst-service.de

HDS Ventilatoren Vertriebs GmbH
Glaswiesenstraße 1
74677 Dörzbach
GERMANY
Phone +49 7937 80355-0
Fax +49 7937 80355-25
info@hds-gmbh.net
www.hds-gmbh.net

## Europe

**Austria**
ebm-papst Motoren & Ventilatoren GmbH
Straubingstraße 17
4030 Linz
AUSTRIA
Phone +43 732 321150-0
Fax +43 732 321150-20
info@at.ebmpapst.com
www.ebmpapst.at

Avnet Abacus Vienna
Schönbrunner Str. 297-307
1120 Vienna
AUSTRIA
Phone +43 1 86642-0
Fax +43 1 86642-250
wien@avnet-abacus.eu
www.avnet-abacus.eu

**Belarus**
ebm-papst Bel AgmbH
4th Montazhnikov side street
Office 332
223010 Minsk
BELARUS
Phone +375 17 3851556
Fax +375 17 3851556
info@by.ebmpapst.com
www.ebmpapst.by

**Belgium**
ebm-papst Benelux B.V.
Sales office Belgium-Luxemburg
Romeinsestraat 6/0101
Research Park Haasrode
3001 Heverlee-Leuven
BELGIUM
Phone +32 16 396-200
Fax +32 16 396-220
info@be.ebmpapst.com
www.ebmpapst.be

Avnet Abacus Diegem
Eagle Building
Kouterveldstraat 20
1831 Diegem
BELGIUM
Phone +32 2 7099 167
Fax +32 2 7099 801
diegem@avnet-abacus.eu
www.avnet-abacus.eu

**Bulgaria**
ebm-papst Romania S.R.L.
Str. Tarnavei No. 20
500327 Brasov
ROMANIA
Phone +40 268 331859
Fax +40 268 312805
dudasludovic@xnet.ro

**Croatia**
ebm-papst Industries Kft.
Ezred u. 2.
1044 Budapest
HUNGARY
Phone +36 1 8722-190
Fax +36 1 8722-194
office@hu.ebmpapst.com

**Czech Republic / Slovakia**
ebm-papst CZ s.r.o.
Kaštanová 34a
620 00 Brno
CZECH REPUBLIC
Phone +420 544 502-411
Fax +420 547 232-622
info@ebmpapst.cz
www.ebmpapst.cz

**Denmark**
ebm-papst Denmark ApS
Vallensbækvej 21
2605 Brøndby
DENMARK
Phone +45 43 631111
Fax +45 43 630505
mail@dk.ebmpapst.com
www.ebmpapst.dk

**Estonia**
ebm-papst Oy, Eesti Filiaal
Kesk tee 13
Aaviku küla, Jüri Tehnopark
75301 Rae Vald, Harjumaa
ESTONIA
Phone +372 65569-78
Fax +372 65569-79
www.ebmpapst.ee

**Finland**
ebm-papst Oy
Puistotie 1
02760 Espoo
FINLAND
Phone +358 9 887022-0
Fax +358 9 887022-13
mailbox@ebmpapst.fi
www.ebmpapst.fi

**France**
ebm-papst sarl
Parc d'Activités Nord
BP 62
67212 Obernai Cedex
FRANCE
Phone +33 820 326266
Fax +33 3 88673883
info@ebmpapst.fr
www.ebmpapst.fr

# ebm-papst in Europe



**Greece**
Helcoma
Th. Rotas & Co OE
Davaki 65
17672 Kallithea-Attiki
GREECE
Phone +30 210 9513-705
Fax +30 210 9513-490
contact@helcoma.gr
www.helcoma.gr

Assimacopoulos S.A.
11, Karitsi Square
10561 Athen
GREECE
Phone +30 10 322 1737
Fax +30 10 322 5708
assimac@interagora.gr
www.assimacopoulos.gr

**Hungary**
ebm-papst Industries Kft.
Ezred u. 2.
1044 Budapest
HUNGARY
Phone +36 1 8722-190
Fax +36 1 8722-194
office@hu.ebmpapst.com

**Iceland**
RJ Engineers
Stangarhyl 1a
110 Reykjavik
ICELAND
Phone +354 567 8030
Fax +354 567 8015
rj@rj.is
www.rj.is

**Ireland**
ebm-papst UK Ltd.
Chelmsford Business Park
Chelmsford Essex CM2 5EZ
UNITED KINGDOM
Phone +44 1245 468555
Fax +44 1245 466336
sales@uk.ebmpapst.com
www.ebmpapst.co.uk

AuBren Limited
Portlaoise Business & Technology Park
Mountrath Road
Portlaoise, Co. Laois
IRELAND
Phone +353 57 8664343
Fax +353 57 8664346
sales@ie.aubren.com
www.aubren.com

**Italy**
ebm-papst Srl
Via Cornaggia 108
22076 Mozzate (Co)
ITALY
Phone +39 0331 836201
Fax +39 0331 821510
info@it.ebmpapst.com
www.ebmpapst.it

**Macedonia**
ebm-papst Industries Kft.
Ezred u. 2.
1044 Budapest
HUNGARY
Phone +36 1 8722-190
Fax +36 1 8722-194
office@hu.ebmpapst.com

**Netherlands**
ebm-papst Benelux B.V.
Polbeemd 7 - 5741 TP Beek en Donk
P. O. Box 140 - 5740 AC Beek en Donk
NETHERLANDS
Phone +31 492 502-900
Fax +31 492 502-950
verkoop@nl.ebmpapst.com
www.ebmpapst.nl

Avnet Abacus Netherlands
Takkebijsters 2
4817 BL Breda
NETHERLANDS
Phone +31 765 722 300
Fax +31 765 722 303
breda@avnet-abacus.eu
www.avnet-abacus.eu

**Norway**
ebm-papst AS
P. B. 173 Holmlia
1251 Oslo
NORWAY
Phone +47 22 763340
Fax +47 22 619173
mailbox@ebmpapst.no
www.ebmpapst.no

**Poland**
ebm-papst Polska Sp. z o.o.
ul. Annopol 4A
03236 Warszawa
POLAND
Phone +48 22 6757819
Fax +48 22 6769587
office@ebmpapst.pl
www.ebmpapst.pl

**Portugal**
ebm-papst (Portugal), Lda.
Centro Empresarial de Alverca
Rua de Adarse, Vale D'Ervas
Corpo D / Fracção 3
2615-178 Alverca do Ribatejo
PORTUGAL
Phone +351 218 394 880
Fax +351 218 394 759
info@pt.ebmpapst.com
www.ebmpapst.pt

**Romania**
ebm-papst Romania S.R.L.
Str. Tarnavei No. 20
500327 Brasov
ROMANIA
Phone +40 268 331859
Fax +40 268 312805
dudasludovic@xnet.ro

**Russia**
ebm-papst Rus GmbH
Olimpiyskiy prospect 291, office 418
141006 Mytistschi, Oblast Moskau
RUSSIA
Phone +7 495 9807524
Fax +7 495 5140924
info@ebmpapst.ru
www.ebmpapst.ru

ebm-papst Ural GmbH
Posadskaja-Strasse, 23(E), 3
620102 Ekaterinburg
RUSSIA
Phone +7 343 2338000
Fax +7 343 2337788
Konstantin.Molokov@ru.ebmpapst.com
www.ebmpapst.ur.ru

**Serbia & Montenegro**
ebm-papst Industries Kft.
Ezred u. 2.
1044 Budapest
HUNGARY
Phone +36 1 8722-190
Fax +36 1 8722-194
office@hu.ebmpapst.com

**Spain**
ebm-papst Ibérica S.L.
Avda. del Sistema Solar, 29
28830 San Fernando de Henares (Madrid)
SPAIN
Phone +34 91 6780894
Fax +34 91 6781530
ventas@ebmpapst.es
www.ebmpapst.es

# ebm-papst in Europe, the Americas and Africa

**Sweden**
ebm-papst AB
Äggelundavägen 2
17562 Järfälla
SWEDEN
Phone +46 10 4544400
Fax +46 8 362306
info@ebmpapst.se
www.ebmpapst.se

**Switzerland**
ebm-papst AG
Rütisbergstrasse 1
8156 Oberhasli
SWITZERLAND
Phone +41 44 73220-70
Fax +41 44 73220-77
verkauf@ebmpapst.ch
www.ebmpapst.ch

Omni Ray AG
Im Schörli 5
8600 Dübendorf
SWITZERLAND
Phone +41 44 802 2880
Fax +41 44 802 2828
r.borner@omniray.ch
www.omniray.ch

**Turkey**
Akantel Elektronik San. Tic. LTD. Sti.
Atatürk Organize Sanayi
Bölgesi 10007 SK. No.:6
35620 Cigli-Izmir
TURKEY
Phone +90 232 3282090
Fax +90 232 3280270
akantel@akantel.com.tr
www.ebmpapst.com.tr

**Ukraine**
ebm-papst Ukraine LLC
Lepse Boulevard, 4, Building 21
03067 Kiev
UKRAINE
Phone +38 044 2063091
Fax +38 044 2063091
mail@ebmpapst.ua
www.ebmpapst.ua

**United Kingdom**
ebm-papst UK Ltd.
Chelmsford Business Park
Chelmsford Essex CM2 5EZ
UNITED KINGDOM
Phone +44 1245 468555
Fax +44 1245 466336
sales@uk.ebmpapst.com
www.ebmpapst.co.uk

## The Americas

**Argentina**
ebm-papst de Argentina S.A.
Parque Industrial Canning Etapa II - Nave 61A
Perito Moreno 845, Canning (1804), Buenos Aires
ARGENTINA
Phone +54 11 46576135
Fax +54 11 46572092
ventas@ar.ebmpapst.com
www.ebmpapst.com.ar

**Brazil**
ebm-papst Motores Ventiladores Ltda.
Av. José Giorgi, 301 Galpões B6+B7
Condominio Logical Center
06707-100 Cotia - São Paulo
BRAZIL
Phone +55 11 4613-8700
Fax +55 11 4777-1456
vendas@br.ebmpapst.com
www.ebmpapst.com.br

**Canada**
ebm-papst Canada Inc.
1800 Ironstone Manor, Unit 2
Pickering, Ontario, L1W3J9
CANADA
Phone +1 905 420-3533
Fax +1 905 420-3772
sales@ca.ebmpapst.com
www.ebmpapst.ca

**Mexico**
ebm Industrial S. de R.L. de C.V.
Paseo de Tamarindos 400-A-5$^{to}$ Piso
Col. Bosques de las Lomas
Mexico 05120, D.F.
MEXICO
Phone +52 55 3300-5144
Fax +52 55 3300-5243
sales@mx.ebmpapst.com
www.ebmpapst.com.mx

**USA**
ebm-papst Inc.
P.O. Box 4009
100 Hyde Road
Farmington, CT 06034
UNITED STATES
Phone +1 860 674-1515
Fax +1 860 674-8536
sales@us.ebmpapst.com
www.ebmpapst.us

## Africa

**South Africa**
ebm-papst South Africa (Pty) Ltd.
P.O. Box 3124
1119 Yacht Avenue
2040 Honeydew
SOUTH AFRICA
Phone +27 11 794-3434
Fax +27 11 794-5020
info@za.ebmpapst.com
www.ebmpapst.co.za

# ebm-papst in Asia and Oceania




## Asia

**China**
ebm-papst Ventilator (Shanghai) Co., Ltd.
No. 418, Hua Jing Road
Wai Gao Qiao Free Trade Zone
No. 2001, Yang Gao (N) Road
200131 Shanghai
P.R. of CHINA
Phone +86 21 5046-0183
Fax +86 21 5046-1119
sales@cn.ebmpapst.com
www.ebmpapst.com.cn

**Hong Kong**
ebm-papst Hong Kong Ltd.
Room 17E, MG Tower
133 Hoi Bun Road, Kwun Tong
Hong Kong
P.R. of CHINA
Phone +852 2145-8678
Fax +852 2145-7678
info@hk.ebmpapst.com

**India**
ebm-papst India Pvt. Ltd.
26/3, G.N.T. Road, Erukkencherry
Chennai-600118
INDIA
Phone +91 44 25372556
Fax +91 44 25371149
sales@in.ebmpapst.com
www.ebmpapst.in

**Indonesia**
ebm-papst Indonesia
Representative Office
German Centre, 4th Floor, Suite 4470
Jl. Kapt. Subijono Dj. Bumi Serpong Damai
15321 Tangerang
INDONESIA
Phone +62 21 5376250
Fax +62 21 5388305
salesdept@id.ebmpapst.com

**Israel**
Polak Bros. Import Agencies Ltd.
9 Hamefalsim Street
Kiryat Arie, Petach-Tikva 49514
ISRAEL
Phone +972 3 9100300
Fax +972 3 5796679
polak@polak.co.il
www.polak.co.il

AVNET Components Israel LTD
P.O.Box 48 Tel-Mond 4065001
ISRAEL
Phone +972 9 7780280
Fax +972 3 760 1115
Avnet.Israel@avnet.com

**Japan**
ebm-papst Japan K.K.
Attend on Tower 13F
Shinyokohama 2-8-12, Kohoku-ku
222-0033 Yokohama-City, Kanagawa
JAPAN
Phone +81 45 47057-51
Fax +81 45 47057-52
info@jp.ebmpapst.com
www.ebmpapst.jp

**Korea**
ebm-papst Korea Co. Ltd.
6F, Trutec Bldg.
12, WorldCupbuk-ro 56-gil
Mapo-Gu
Seoul 03924
KOREA
Phone +82 2 366213-24
Fax +82 2 366213-26
info@kr.ebmpapst.com
www.ebmpapst.co.kr

**Malaysia**
ebm-papst Malaysia
Representative Office
No. 16-1, Jalan Putra Mahkota 7/5A
Persiaran Subang, Selangor Darul Ehsan
47600 Subang Jaya
MALAYSIA
Phone +60 3 5192 7688
Fax +60 3 5614 3078
salesdept@my.ebmpapst.com

**Philippines**
ebm-papst SEA Pte. Ltd.
Representative Office
Coherco Financial Tower
Trade Street Corner Investment Drive
Unit 1101 Madrigal Business Park
1799 Ayala Alabang / Muntinlupa City
PHILIPPINES
Phone +63 02 8042747
Fax +63 02 8042757
sales@ph.ebmpapst.com

**Singapore**
ebm-papst SEA Pte. Ltd.
9 Tai Seng Drive
#03-01 Geo-Tele Centre, Lobby B
Singapore 535227
SINGAPORE
Phone +65 65513789
Fax +65 68428439
salesdept@sg.ebmpapst.com

**Taiwan**
ETECO Engineering & Trading Corp.
10F-I, No. 92, Teh-Wei Str.
Tsow-Inn District, Kaohsiung
TAIWAN
Phone +886 7 557-4268
Fax +886 7 557-2788
eteco@ms22.hinet.net
www.ebmpapst.com.tw

**Thailand**
ebm-papst Thailand Co., Ltd.
99/9 Moo 2, Central Chaengwattana Tower
14th Floor, Room 1402
Chaengwattana Road Bangtarad, Pakkret
11120 Nonthaburi
THAILAND
Phone +66 2 8353785-7
Fax +66 2 8353788
salesdept@th.ebmpapst.com

**United Arab Emirates**
ebm-papst Middle East FZE
PO Box 17755
Jebel Ali Free Zone / FZS1 / AP05
Dubai
UNITED ARAB EMIRATES
Phone +971 4 88608-26
Fax +971 4 88608-27
info@ae.ebmpapst.com
www.ebmpapst.ae

**Vietnam**
ebm-papst SEA Pte. Ltd.
Representative Office
Floor M, Phuong Long Building
506 Nguyen Dinh Chieu Street, Ward 4, District 3
Ho Chi Minh City
VIETNAM
Phone +84 28 3929 0699 / 3929 0670
Fax +84 28 3929 0669
linh.nguyen@vn.ebmpapst.com

## Oceania

**Australia**
ebm-papst A&NZ Pty Ltd.
10 Oxford Road
Laverton North, Victoria, 3026
AUSTRALIA
Phone +61 3 9360-6400
Fax +61 3 9360-6464
sales@ebmpapst.com.au
www.ebmpapst.com.au

**New Zealand**
ebm-papst A&NZ Pty Ltd.
Unit H, 61 Hugo Johnston Drive
1061 Penrose, Auckland
NEW ZEALAND
PO Box 112278, 1642 Penrose, Auckland
Phone +64 9 525-0245
Fax +64 9 525-0246
sales@ebmpapst.com.au
www.ebmpapst.com.au


ebmpapst

www.ebmpapst.com

37634-7-8811 · 2019-04 · mc-5'
Printed in Germany

ebmpapst

the engineer's choice

**ebm-papst**
**St. Georgen GmbH & Co. KG**

Hermann-Papst-Straße 1
D-78112 St. Georgen
Germany
Phone +49 7724 81-0
Fax +49 7724 81-1309
info2@de.ebmpapst.com

**ebm-papst**
**Mulfingen GmbH & Co. KG**

Bachmühle 2
D-74673 Mulfingen
Germany
Phone +49 7938 81-0
Fax +49 7938 81-110
info1@de.ebmpapst.com

**ebm-papst**
**Landshut GmbH**

Hofmark-Aich-Straße 25
D-84030 Landshut
Germany
Phone +49 871 707-0
Fax +49 871 707-465
info3@de.ebmpapst.com