ITEM NO.	PART NUMBER	DESCRIPTION	QTY.	COMPONENT NOTES
1	50-00541	Connector, dc jack, 5.5x2.1x17.6 mm, molding style, spring contacts, nickel plated, 105° C	1	
2	30-00795	Wire, 2C TS, 18 AWG, UL2651, 300V, 105C, 4.4 mm, VW-1, PVC, red and black	1	
3	24-00328	Overmold, panel mount jack, Nylon	1	Nylon UL 94 V-0, black
4	56-00000	Hardware, nut, hex, 13x2.5 mm, M11x1.0, brass, nickel plated	1	
5	56-00001	Hardware, washer, lock, 14x11.1x1.1 mm, SPCC, nickel plated	1	
6	55-00310	O-ring, Ø10 ID x Ø13 OD x 1.5mm, silicone, black	1	

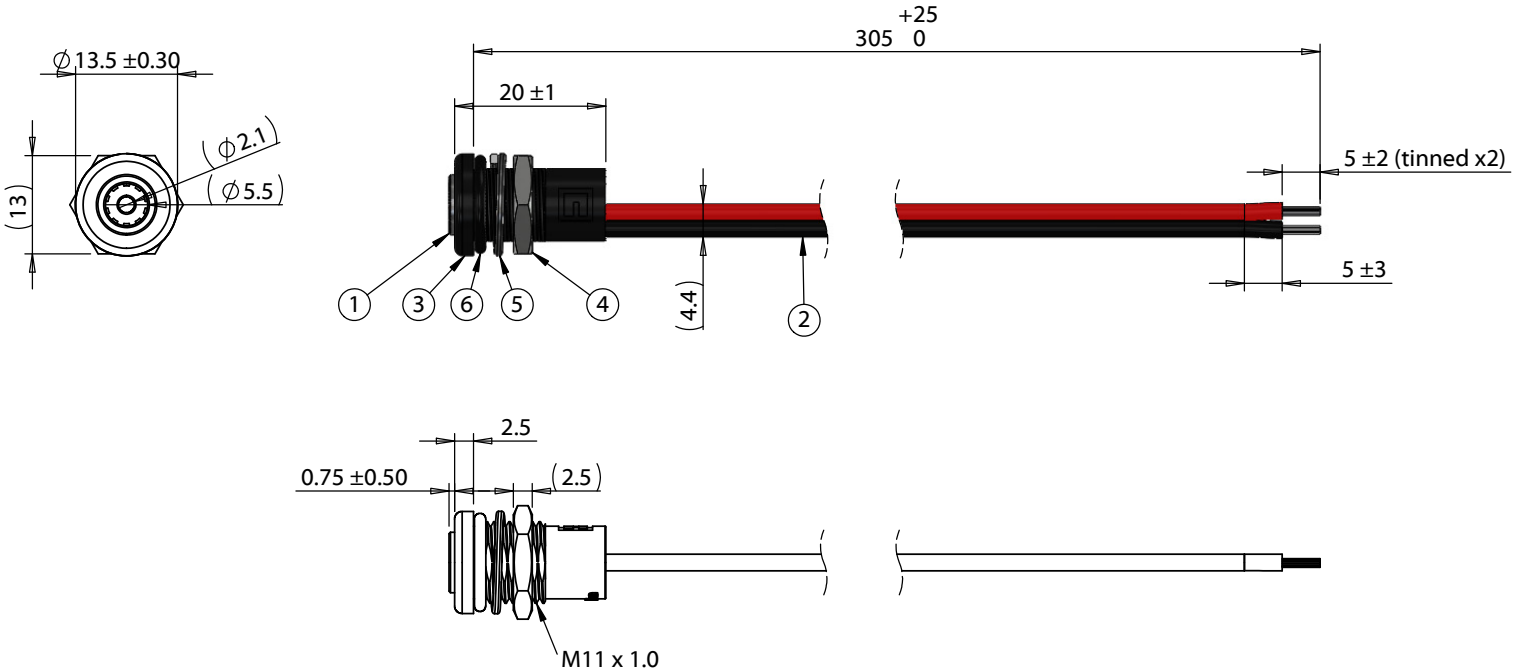

Installation Details
Panel thickness: 1.5 - 4
Recommended panel cutout:

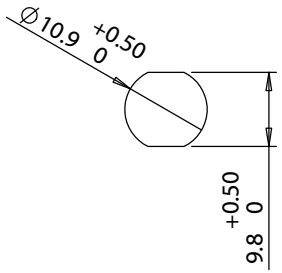

Notes:
Cable rated for 48 V, 7.5 A
Panel ingress protection: IP67
Functionally equivalent components may be substituted

Wiring Diagram	
50-00541	wire color
center	red
sleeve	black

Revision:	Date:	Description:
A	01/22/2024	Initial release

Prepared: AV — Digitally signed by AV Date: 2024.04.22 12:09:50 -07'00'

Verified: KW — Digitally signed by KW Date: 2024.04.22 12:18:12 -07'00'

Dimensions are in millimeters.
Tolerances:
X: ± 0.5 mm
X.X: ± 0.3 mm
X.XX: ± 0.05 mm

Notes:
RoHS compliant
Function test: no open, no short circuit, no intermittent

Description:
Cable, 305 mm, 5.5x2.1 mm 50-00541 dc panel mount jack to stripped and tinned, 18 AWG, 30-00795

TENSILITY
tel 1.541.323.3228 800 877.670.7118
fax 1.541.323.4202 web tensility.com

Size: A
Part number: 10-06001
Scale: 1:1
Sheet 1 of 1

5 4 3 2 1

To see a custom version of this cable assembly, call Tensility at 541-323-3228 or email engineering@tensility.com