ITEM NO.	PART NUMBER	DESCRIPTION	QTY.	COMPONENT NOTES
1	50-00616	Connector, dc jack, 5.5x2.1x17.6mm, brass, nickel plated, molding type, threaded 5/16-32	1	
2	30-00795	Wire, 2C TS, 18 AWG, UL2651, 300V, 105C, 4.4 mm, VW-1, PVC, red and black	1	
3	24-00333	Overmold, threaded panel mount jack, Nylon, M11x1.0	1	
4	56-00000	Hardware, nut, hex, 13x2.5 mm, M11x1.0, brass, nickel plated	1	
5	56-00001	Hardware, washer, lock, 14x11.1x1.1 mm, SPCC, nickel plated	1	

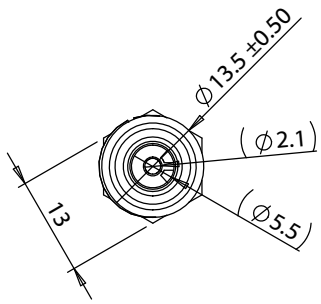

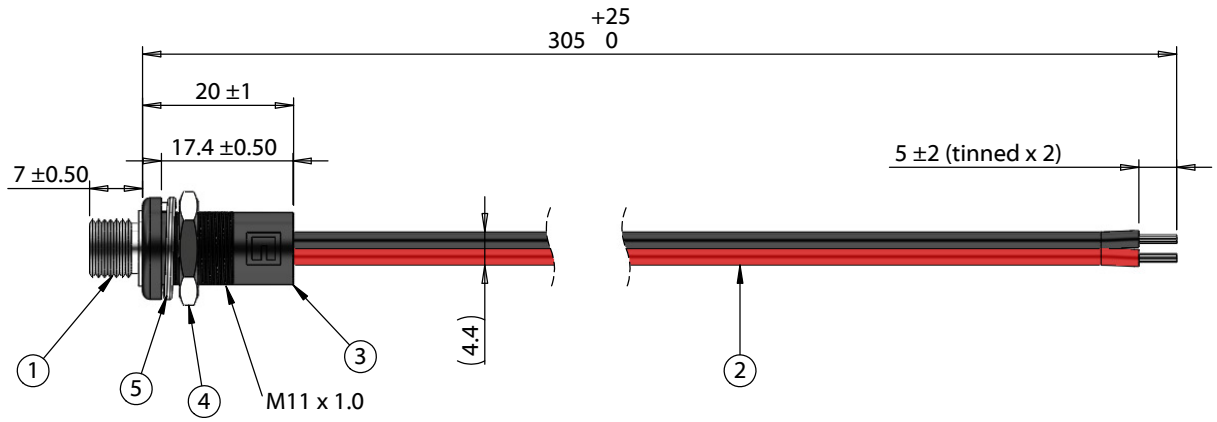

Installation Details

Panel thickness: 1.5 - 4.5

Max recommended torque: 0.15 N m

Recommended panel cutout:

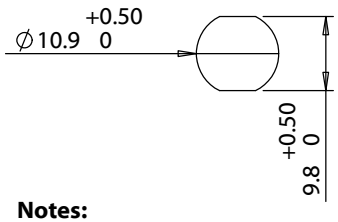

Notes:

Functionally equivalent components may be substituted

Cable rated for 48 V, 7.5 A

Wiring Diagram	
50-00616	Wire Color
Center	Red
Sleeve	Black

Revision:	Date:	Description:
A	6/1/2020	Initial release

Prepared: AG Digitally signed by AG Date: 2024.11.25 14:28:28 -08'00'

Verified: AL Digitally signed by AL Date: 2025.02.27 16:11:15 -08'00'

Dimensions are in millimeters.
Tolerances:
X: ± 0.5 mm
X.X: ± 0.3 mm
X.XX: ± 0.05 mm

Notes:

RoHS compliant

Function test: no open, no short circuit, no intermittent

Description:

Cable, 305 mm, 5.5x2.1 mm 50-00616 dc panel mount jack to stripped and tinned, 18 AWG, 30-00795

TENSILITY

tel 1.541.323.3228 800 877.670.7118

fax 1.541.323.4202 web tensility.com

Size: A

Part number: 10-03672

Scale: 1:1

Sheet 1 of 1

5 4 3 2 1

To see a custom version of this cable assembly, call Tensility at 541-323-3228 or email engineering@tensility.com