796980-8 ✔ ACTIVE

Buchanan

TE Internal #: 796980-8

8 Position PCB Terminal Block, Header, Wire-to-Board, 7.62 mm [.3 in] Centerline, 1 Row, 300 VAC, Printed Circuit Board, Vertical

View on TE.com >

Connectors > Terminal Blocks & Strips > PCB Terminal Blocks

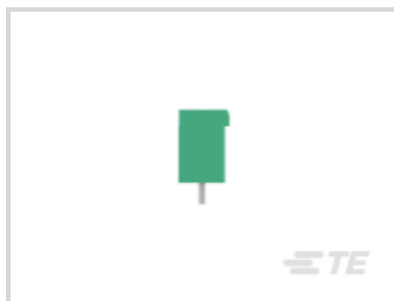

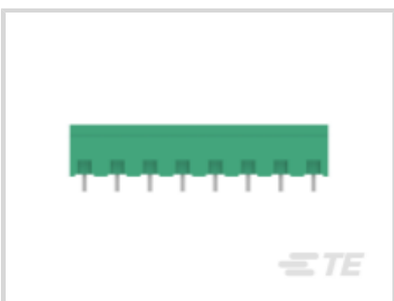

Terminal Block Connector Type: **Header**

Connector System: **Wire-to-Board**

Number of Positions: **8**

Centerline (Pitch): **7.62 mm [.3 in]**

Number of Rows: **1**

Features

Product Type Features

Header Type	Fully Shrouded
Terminal Block Connector Type	Header
Connector System	Wire-to-Board
Connector & Contact Terminates To	Printed Circuit Board

Configuration Features

Stacking Configuration	Side Stackable
Number of Positions	8
Number of Rows	1

Electrical Characteristics

Operating Voltage	300 VAC

Body Features

Primary Product Color	Green
Product Orientation	Vertical

Contact Features

Contact Mating Area Plating Material	Tin (Sn)
Contact Base Material	Copper Alloy
Contact Current Rating (Max)	15 A

Termination Features

Termination Post & Tail Length	3.5 mm[.138 in]
Termination Method to PCB	Through Hole - Solder

Mechanical Attachment

Connector Mounting Type	Board Mount

Housing Features

Housing Material	PA 66
Centerline (Pitch)	7.62 mm[.3 in]

Usage Conditions

Operating Temperature Range	-40 – 105 °C[-40 – 221 °F]

Operation/Application

Circuit Application	Power & Signal

Packaging Features

Packaging Method	Box
Packaging Quantity	50

Product Compliance

For compliance documentation, visit the product page on TE.com>

EU RoHS Directive 2011/65/EU	Compliant
EU ELV Directive 2000/53/EC	Compliant
China RoHS 2 Directive MIIT Order No 32, 2016	有害物质含量符合标准要求 No Restricted Substance(s) Above Threshold
EU REACH Regulation (EC) No. 1907/2006	Current ECHA Candidate List: JUNE 2025 (250) Candidate List Declared Against: JUNE 2025 (250) Does not contain REACH SVHC
Halogen Content	Low Halogen - Br, Cl, F < 900 ppm per homogenous material. Also BFR/CFR/PVC Free
Solder Process Capability	Pin-in-Paste capable to 245°C

Product Compliance Disclaimer

This information is provided based on reasonable inquiry of our suppliers and represents our current actual knowledge based on the information they provided. This information is subject to change. The part numbers that TE has identified as EU RoHS compliant have a maximum concentration of 0.1% by weight in homogenous materials for lead, hexavalent chromium, mercury, PBB, PBDE, DBP, BBP, DEHP, DIBP, and 0.01% for cadmium, or qualify for an exemption to these limits as defined in the Annexes of Directive 2011/65/EU (RoHS2). Finished electrical and electronic equipment products will be CE marked as required by Directive 2011/65/EU. Components may not be CE marked. Additionally, the part numbers that TE has identified as EU ELV compliant have a maximum concentration of 0.1% by weight in homogenous materials for lead, hexavalent chromium, and mercury, and 0.01% for cadmium, or qualify for an exemption to these limits as defined in the Annexes of Directive 2000/53/EC (ELV). Regarding the REACH Regulation, the information TE provides on SVHC in articles for this part number is based on the latest European Chemicals Agency (ECHA) 'Guidance on requirements for substances in articles' posted at this URL: https://echa.europa.eu/guidance-documents/guidance-on-reach

Compatible Parts

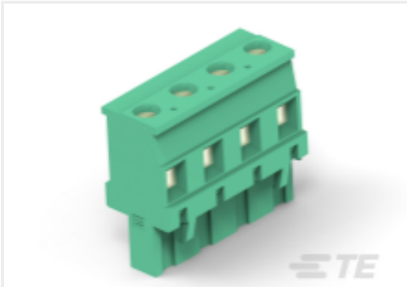

TE Part # 284049-8
TERMI-BLOK VERTICAL PLUG STACK

TE Part # 284043-8
TERMI-BLOK VERTICAL PLUG STACK

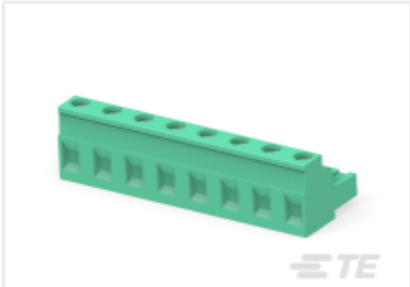

TE Part # 796981-8
8 POS TERMI-BLOK R/A PLUG 7.62

TE Part # 796949-8
8 POS TERMI-BLOK PCB MOUNT

Customers Also Bought

TE Part #114017-ZZ
SEALING PLUG, SIZE 12/16, WHT

TE Part #CAT-D48-ST273
DEUTSCH Connector Solid Contacts

TE Part #CAT-D487-W416
Wedgelocks: DEUTSCH DT

TE Part #DT04-2P
REC, 2P, GRY, N

TE Part #DT06-2S
PLG, 2P, GRY, N

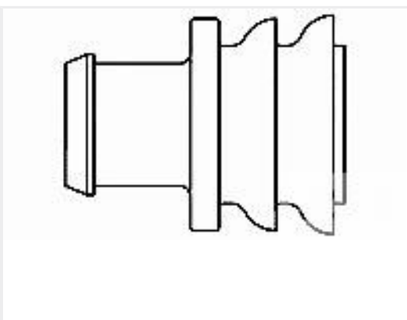

TE Part #281934-2
SINGLE WIRE SEAL

TE Part #CAT-AM71-CH8172
AMP SUPERSEAL 1.5MM, CONNECTOR HOUSING

Documents

Product Drawings

8 POS TERMI-BLOK VERT HDR 7.62

English

CAD Files

3D PDF

3D

Customer View Model

ENG_CVM_CVM_796980-8_O.2d_dxf.zip

English

Customer View Model

ENG_CVM_CVM_796980-8_O.3d_igs.zip

English

Customer View Model

ENG_CVM_CVM_796980-8_O.3d_stp.zip

English

By downloading the CAD file I accept and agree to the Terms and Conditions of use.

Datasheets & Catalog Pages

BUCHANAN TERMINAL BLOCKS CATALOG - EUROSTYLE TERMINAL BLOCKS

English

1-1773458-1_EURO_STYLE_TERMINAL_BLOCKS_QRG

English

Product Specifications

Application Specification

English

Agency Approvals

UL

English