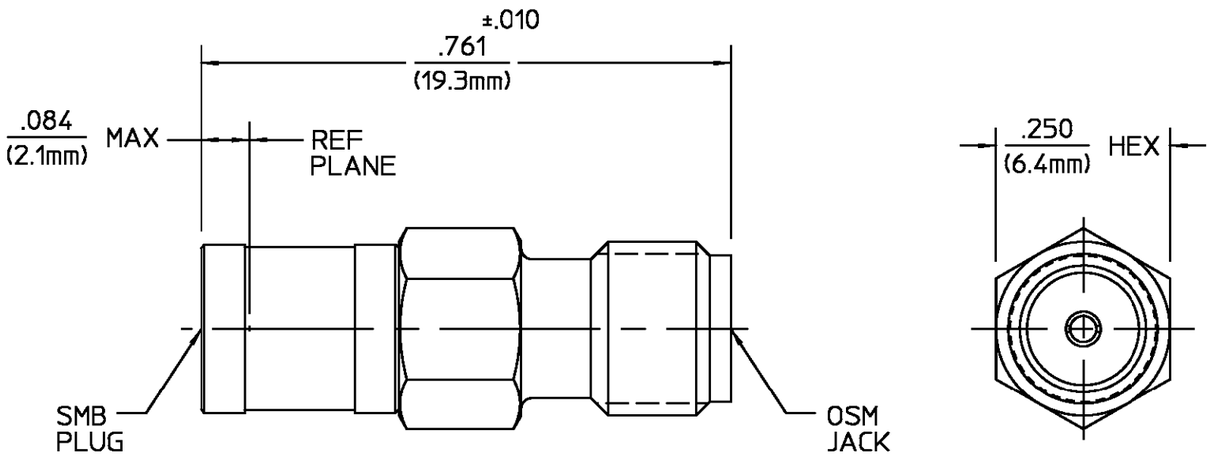

REVISIONS			
REV	DESCRIPTION	DATE	APPROVED
A	REV/REDRAWN/ECN 17976	11/30/87	RW
B	REV/ECN 19297	11/17/89	BSH
03_0	ECN 92-0010	08/13/92	

ELECTRICAL

Nominal Impedance (Ohms) 50
Frequency Range (GHz) DC to 4
Volt Rating (VRMS MAX)
@ Sea Level 335
VSWR 1.10 +.016 f(GHz)
Insertion Loss (dB MAX) 0.30
RF Leakage (dB MIN) -55 @ 2-3 GHz
Corona, 70,000 Ft (VRMS MIN) 250
Dielectric Withstanding Voltage
(VRMS MIN) @ Sea Level 1,000
Contact Resistance (Milliohms MAX)
Center Contact 6.0
Outer Contact 2.0
Cable to Housing N/A
RF High Potential @ Sea Level
(VRMS MIN @ 5 MHz) 700
I.R.(Megohms MIN) 1,000

MECHANICAL

Interface Dimensions MIL-STD-348A,
OSM Fig. 310.2
OSMB Fig. 311.2
Recommended Mating
Torque N/A
Mating Characteristics:
Insertion (MAX lbs) OSM 3.0
OSMB 2.5
Withdrawal (MIN Oz) OSM 1.0
OSMB 1.0
Force to Engage and
Disengage (in-lbs MAX) OSM 2.0
(lbs MAX) OSMB 14.0
Center Contact Captivation
Axial (Lbs) 6.0
Radial (In-Oz) N/A
Cable Retention
Axial Force (Lbs) N/A
Torque (In-Oz) N/A
Weight (Grams) TBD

ENVIRONMENTAL

Temperature Rating -65°C to +125°C
Vibration MIL-STD-202, Method 204, Condition B
Shock MIL-STD-202, Method 213, Condition B
Thermal Shock MIL-STD-202, Method 107, Condition B, Except High Temp 85°C
Corrosion - MIL-STD-202, Method 101, Condition B, 5% salt spray

COMPONENT	MATERIAL	FINISH
HOUSING SLEEVE	STAINLESS STEEL PER ASTM-A484 AND ASTM-A582, TYPE 303	PASSIVATE PER QQ-P-35
DIELECTRIC	PTFE FLUOROCARBON PER ASTM-D-1457	N/A
CENTER CONTACT	BERYLLIUM COPPER PER ASTM B 196, ALLOY C17300, CONDITION H	GOLD PLATE PER MIL-G-45204
RETAINING RING	BERYLLIUM COPPER PER ASTM B 194, ALLOY C17200, CONDITION H	GOLD PLATE PER MIL-G-45204

UNLESS OTHERWISE SPECIFIED DIMENSIONS ARE IN INCHES
TOLERANCE ON
FRAC. ± 1/64 DEC. ±.005 ANGLES ± 1°

DRAWN BY BSH DATE 11/19/87
CHECKED BY JW 11/24/87
APP'D BY RW/BC 12/2/87

AMP

AMP Incorporated
140 Fourth Avenue
Waltham, MA 02451-7599

These drawings and specifications are the property of AMP Incorporated and shall not be reproduced or copied or used in whole or in part as the basis for the manufacture or sale of item(s) without written permission.

USE ASS'Y PROCEDURE

NO. A.P. N/A

TITLE SMB PLUG TO OSM JACK ADAPTER

SIZE	CODE IDENT NO.		REV
B	26805	5182-2240-00	03_0

SCALE 5 : 1 SHEET 1 OF 1

CUSTOMER DRAWING

AMP PART # 1060498-1
SHEET 1 OF 1 REV A