Style
M12 Socket, shielded
4 pin
B-coding

Ratings
Voltage: 250 V
Current: 4 A

Operating Temperature Range
-40~105 °C

Materials
1. Insulator: Polyamide 66 (PA66), UL94 HB, black
2. Pin: C5191 phosphor bronze, gold plated
3. Shell: C3604 brass, nickel plated
4. Nut: C3604 brass, nickel plated
5. O-ring: Silicone rubber
6. Epoxy: Epoxy resin

Electrical Requirements
Dielectric strength: 1 min @ 500 Vac
Insulation resistance: 100 MΩ @ 500 Vdc
Contact resistance: 10 mΩ or less

Mechanical Requirements
Life cycle: 500 mating cycles minimum

Environmental Requirements
Salt spray test: 35 °C, relative humidity 90-95%, 5% NaCl mist for 48 hrs. Wash parts after test. Maintain mechanical requirements and a contact resistance of less than 10 mΩ.
Waterproof: IP67

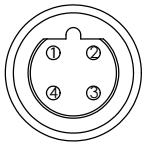

Front View
Not to Scale

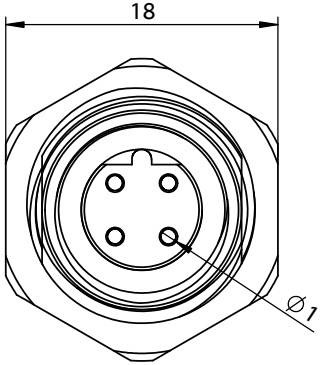

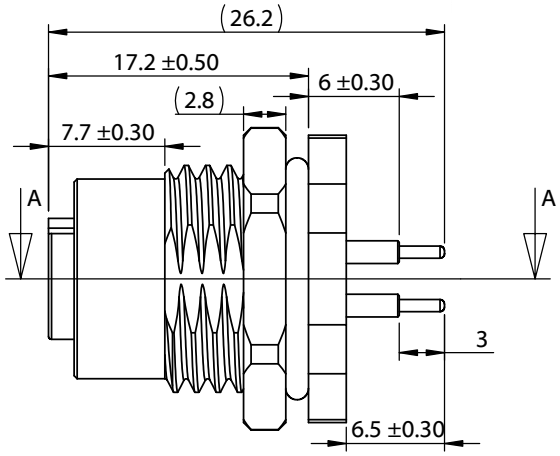

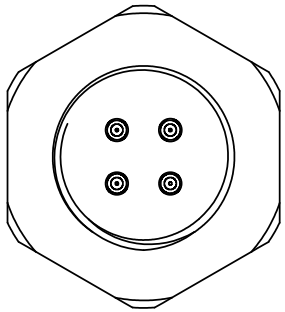

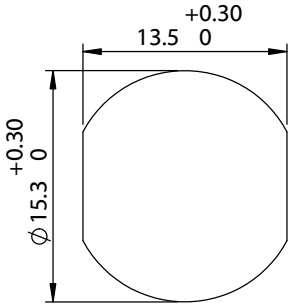

Panel cutout (PG9)
Panel thickness (4.5mm max.)

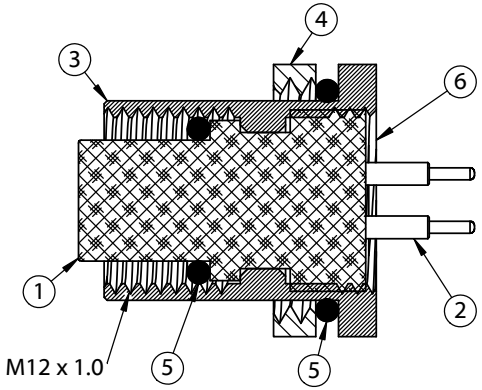

SECTION A-A

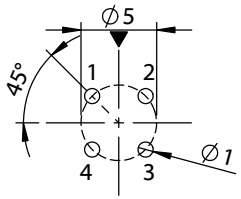

PCB Layout

Revision:	Date:	Description:
A	1/30/2023	Initial release

Prepared: RR Digitally signed by RR Date: 2025.03.03 09:39:12 -08'00'

Verified: AL Digitally signed by AL Date: 2025.03.03 14:10:41 -08'00'

Dimensions are in millimeters.
Tolerances:
X: ± 0.3 mm
X.X: ± 0.1 mm
X.XX: ± 0.05 mm

Notes:

RoHS compliant

Function test: no open, no short circuit, no intermittent

Description:
Connector, M12 B-code socket, 4 pin, 12xL26.2 mm, panel mount, thru hole, gold plated, IP67

TENSILITY
tel 1.541.323.3228 800 877.670.7118
fax 1.541.323.4202 web tensility.com

Size: A
Part number: 54-00344
Scale: 2:1
Sheet 1 of 1

To see a custom version of this cable assembly, call Tensility at 541-323-3228 or email engineering@tensility.com

5 4 3 2 1