Style
M8 Plug, shielded
6 pin
A-coding

Ratings
Voltage: 30 V
Current: 1 A

Operating Temperature Range
-40~105 °C

Materials
1 Insulator: PA66, UL 94 HB, black
2 Pin: C3604 brass, gold flashing
3 Nut: C3604 brass, nickel plated
4 Shell: C3604 brass, nickel plated
5 O-ring: Silicone rubber
6 Epoxy: Epoxy resin

Electrical Requirements
Dielectric strength: 1 min @ 500 Vac
Insulation resistance: 100 MΩ @ 500 Vdc
Contact resistance: 10 mΩ or less

Mechanical Requirements
Life cycle: 1000 mating cycles minimum

Environmental Requirements
Salt spray test: 35 °C, relative humidity 90-95%, 5% NaCl mist for 24 hrs. Wash parts after test. Maintain mechanical requirements and a contact resistance of less than 10 mΩ.
Waterproof: IP67

Assembly Info
Wire gauge: 26 AWG max

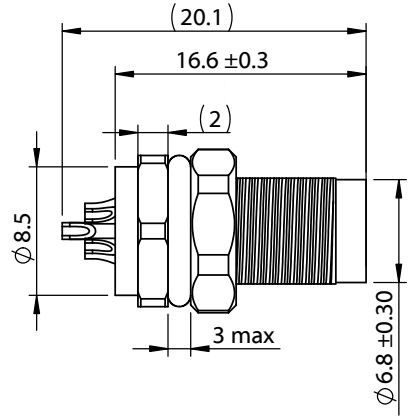

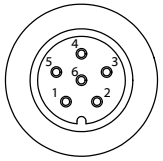

Front View
Not to Scale

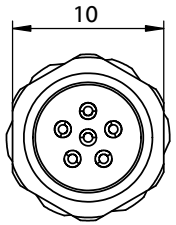

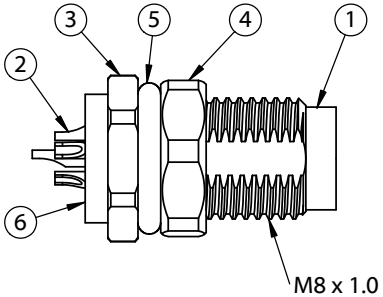

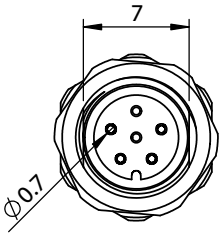

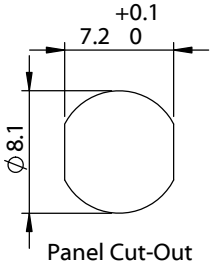

Panel Cut-Out

Revision:	Date:	Description:
A	1/10/2023	Initial release

Prepared: AL Digitally signed by AL Date: 2025.02.28 16:34:37 -08'00'

Verified: RR Digitally signed by RR Date: 2025.03.03 08:04:19 -08'00'

Dimensions are in millimeters.
Tolerances:
X: ± 0.3 mm
X.X: ± 0.1 mm
X.XX: ± 0.05 mm

Notes:

RoHS compliant

Function test: no open, no short circuit, no intermittent

Description:

Connector, M8 A-code plug, 6 pin, 8xL20.1 mm, panel mount, solder cup, gold plated, IP67

TENSILITY
tel 1.541.323.3228 800 877.670.7118
fax 1.541.323.4202 web tensility.com

Size: A
Part number: 54-00324
Scale: 2:1
Sheet 1 of 1

To see a custom version of this cable assembly, call Tensility at 541-323-3228 or email engineering@tensility.com

5 4 3 2 1