**Style**
M8 Socket, shielded
4 pin
A-coding

**Ratings**
Voltage: 30 V
Current: 3 A

**Operating Temperature Range**
-40~105 °C

**Materials**
1. Insulator: PA66, UL 94 HB, black
2. Pin: C3604 brass, gold flashing
3. Nut: C3604 brass, nickel plated
4. Shell: C3604 brass, nickel plated
5. O-ring: Silicone rubber
6. Epoxy: Epoxy resin

**Electrical Requirements**
Dielectric strength: 1 min @ 500 Vac
Insulation resistance: 100 MΩ @ 500 Vdc
Contact resistance: 10 mΩ or less

**Mechanical Requirements**
Life cycle: 1000 mating cycles minimum

**Environmental Requirements**
Salt spray test: 35 °C, relative humidity 90-95%, 5% NaCl mist for 24 hrs. Wash parts after test. Maintain mechanical requirements and a contact resistance of less than 10 mΩ.
Waterproof: IP67 (in mated state). IP67 panel ingress requires sealing cap

Front View
Not to Scale

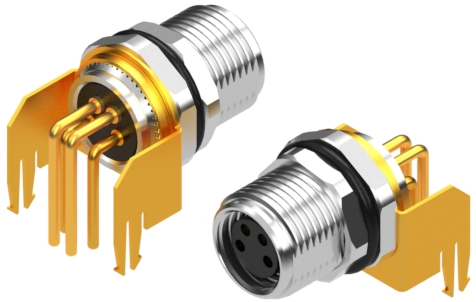

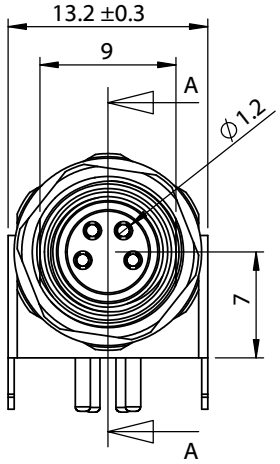


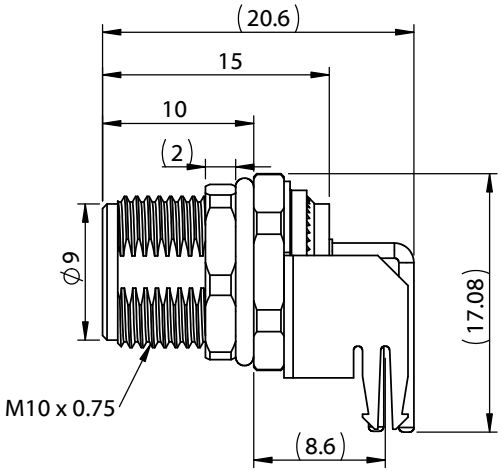


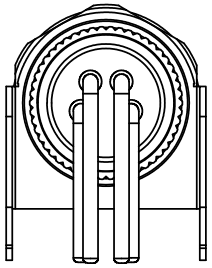

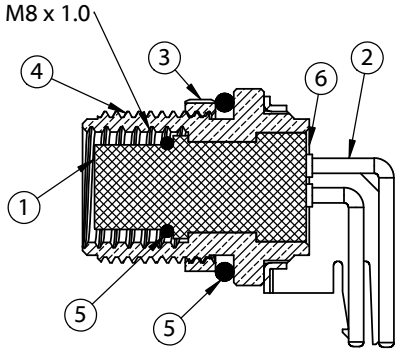


SECTION A-A

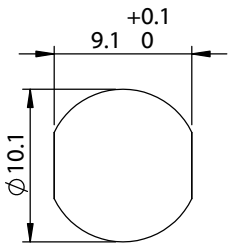


Panel Cut-Out

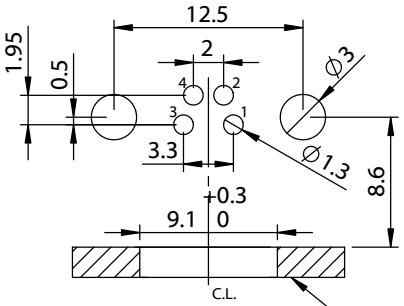


PCB Layout

Panel Thickness
2.0 ~ 3.0 mm

| Revision: | Date: | Description: |
|---|---|---|
| A | 8/23/21 | Initial Release |
| | | |
| | | |
| | | |
| | | |

Prepared: RR
Digitally signed by RR
Date: 2024.10.22
08:56:33 -07'00'

Verified: AL
Digitally signed by AL
Date: 2025.03.03
08:36:29 -08'00'

Dimensions are in millimeters.
Tolerances:
X: ± 0.3 mm
X.X: ± 0.1 mm
X.XX: ± 0.05 mm

Notes:
RoHS compliant
Function test: no open, no short circuit, no intermittent

Description:
Connector, M8 A-code socket, 4 pin, 8xL20.6 mm, panel mount, thru hole, 90°, board lock, gold plated, IP67


TENSILITY
tel 1.541.323.3228 800 877.670.7118
fax 1.541.323.4202 web tensility.com


Size: A
Part number: 54-00274
Scale: 2:1
Sheet 1 of 1

5 4 3 2 1