Style
M12 Socket, shielded
5 pin
D-coding

Ratings
Voltage: 60 V
Current: 4 A

Operating Temperature Range
-40 ~ 105 °C

Materials
1. Insulator: Polyamide 66 (PA66), UL94 HB, black
2. Socket: C5191 Phosphor bronze, gold plated
3. Shell: C3604 brass, nickel plated
4. O-ring: Silicone rubber

Electrical Requirements
Dielectric strength: 1 min @ 500 Vac
Insulation resistance: 100 MΩ @ 500 Vdc
Contact resistance: 10 mΩ or less

Mechanical Requirements
Life cycle: 500 mating cycles minimum

Environmental Requirements
Salt spray test: 35 °C, relative humidity 90-95%, 5% NaCl mist for 48 hrs. Wash parts after test. Maintain mechanical requirements and a contact resistance of less than 10 mΩ.
Waterproof: IP67

Assembly Info
Wire gauge: 22 AWG max

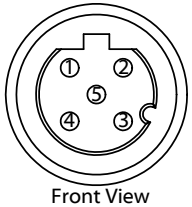

Front View
Not to Scale

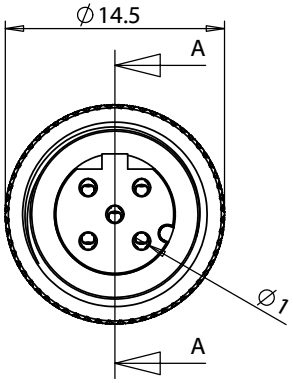

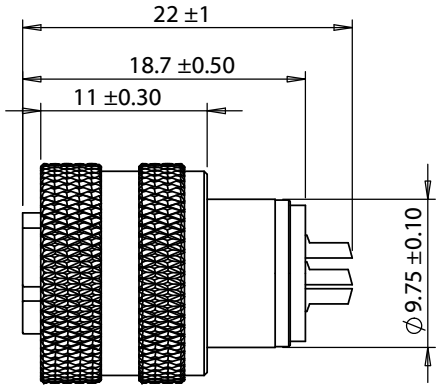

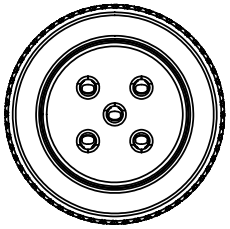

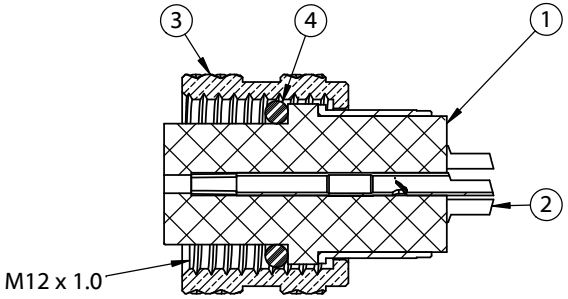

SECTION A-A

Revision:	Date:	Description:
A	2/7/2023	Initial release

Prepared: RR Digitally signed by RR Date: 2024.10.11 07:13:55 -07'00'

Verified: AL Digitally signed by AL Date: 2025.03.03 07:58:04 -08'00'

Dimensions are in millimeters.
Tolerances:
X: ± 0.3 mm
X.X: ± 0.1 mm
X.XX: ± 0.05 mm

Notes:
RoHS compliant
Function test: no open, no short circuit, no intermittent

Description:
Connector, M12 D-code socket, 5 pin, 12xL22 mm, molding style, solder cup, gold plated, IP67, shielded

TENSILITY
tel 1.541.323.3228 800 877.670.7118
fax 1.541.323.4202 web tensility.com

Size: A
Part number: 50-01032
Scale: 2:1
Sheet 1 of 1

5 4 3 2 1