, 5-pole, Socket, PCB terminals, DIN Plug/Socket

5-pole

See below:
Approvals and Compliances

Description

- PCB :
  Screw-on mounting , rear-side
- DIN Plug: 5-pole , straight

Weblinks

pdf data sheet, html datasheet, General Product Information, Distributor-Stock-Check, Detailed request for product

Technical Data

Diameter	9.0 mm
Number of Poles	5-pole
Ratings DC	1 A / 12 VDC
Ratings AC	1 A / 100 VAC
Dielectric Strength	250 VAC
Insulation Resistance	> 50 MΩ @ 250 VDC

Allowable Operation Temperature	-20 °C to 70 °C
Terminal	PCB terminals silver plated
Mounting	Screw-on mounting wall thickness max. 2.0 mm
Lifetime	5000 Insertions

Approvals and Compliances

Detailed information on product approvals, code requirements, usage instructions and detailed test conditions can be looked up in Details about Approvals

SCHURTER products are designed for use in industrial environments. They have approvals from independent testing bodies according to national and international standards. Products with specific characteristics and requirements such as required in the automotive sector according to IATF 16949, medical technology according to ISO 13485 or in the aerospace industry can be offered exclusively with customer-specific, individual agreements by SCHURTER.

Compliances

The product complies with following Guide Lines

Identification	Details	Initiator	Description
RoHS	RoHS	SCHURTER AG	Directive RoHS 2011/65/EU, Amendment (EU) 2015/863
50	China RoHS	SCHURTER AG	The law SJ / T 11363-2006 (China RoHS) has been in force since 1 March 2007. It is similar to the EU directive RoHS.
REACH	REACH	SCHURTER AG	On 1 June 2007, Regulation (EC) No 1907/2006 on the Registration, Evaluation, Authorization and Restriction of Chemicals 1 (abbreviated as "REACH") entered into force.

Dimensions [mm]

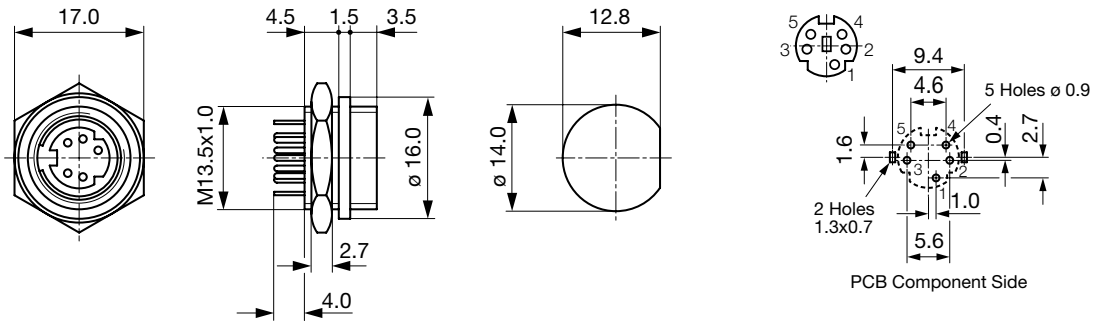

Variants

Product group	Diameter [mm]	Number of Poles	Terminal	Order Number
DIN Plug/Socket	9.0	5-pole	PCB terminals	4850.2500

Availability for all products can be searched real-time: https://www.schurter.com/en/info-center/support-tools/stock-check-distributors

Packaging unit

250 Pcs

Mating Inlets/Plugs

Category / Description	
DIN Plugs / Sockets Overview complete	
, 5-pole, Plug, solder terminal, DIN Plug/Socket	4850.1510

03.09.2025

The specifications, descriptions and illustrations indicated in this document are based on current information. All content is subject to modifications and amendments. Information furnished is believed to be accurate and reliable. However, users should independently evaluate the suitability and test each product selected for their own applications.