5100147-1 ✔ ACTIVE

Z-PACK | Z-PACK 2mm HM

TE Internal #: 5100147-1

Hard Metric Backplane PCB Mount Receptacle, ≤1 Gb/s, 22 Column, 5 Row, Mezzanine, 110 Position, 2 mm [.078 in] Centerline, Right Angle, Z-PACK 2mm HM

View on TE.com >

Connectors > PCB Connectors > Backplane Connectors > Hard Metric Backplane Connectors >

HM Receptacle Connector: Traditional Backplane, Coplanar, 2mm

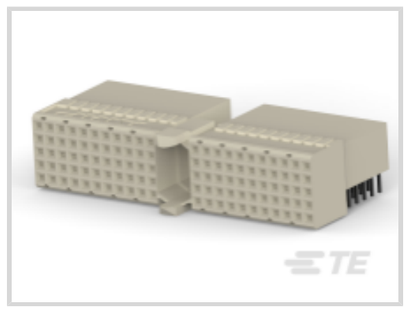

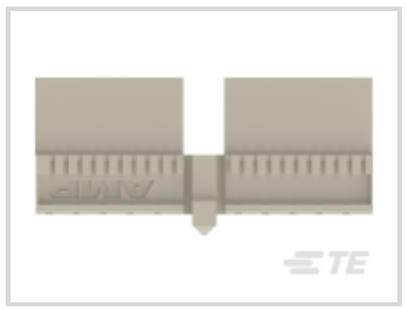
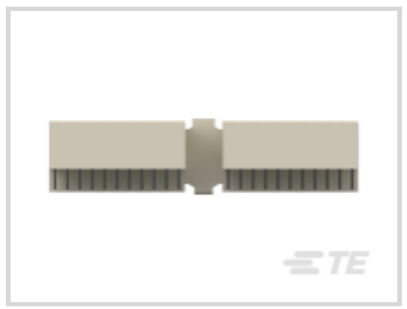
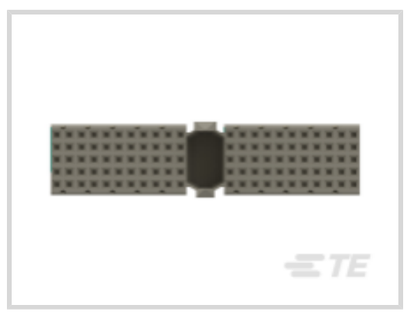

PCB Connector Type: **PCB Mount Receptacle**

Data Rate: **≤1 Gb/s**

Number of Columns: **22**

Number of Rows: **5**

Backplane Architecture: **Mezzanine**

All HM Receptacle Connector: Traditional Backplane, Coplanar, 2mm (48)

Features

Product Type Features

Connector & Contact Terminates To	Printed Circuit Board
Backplane Interface Type	2mm HM
Connector System	Board-to-Board
PCB Connector Type	PCB Mount Receptacle
Sealable	No

Configuration Features

Rows Loaded	A, B, C, D, E
Number of Columns	22
Number of Rows	5
Backplane Architecture	Mezzanine
Number of Positions	110
PCB Mount Orientation	Right Angle

Signal Characteristics

Crosstalk Version	Standard
Data Rate	≤1 Gb/s

Body Features

Primary Product Color	Gray

Contact Features

Contact Underplating Material	Nickel
Contact Base Material	Phosphor Bronze
CompactPCI Designation	None
PCB Contact Termination Area Plating Material	Tin
Feedthrough Post Length	3.3 mm
Contact Type	Socket
Contact Mating Area Plating Material	Gold (Au), Gold Flash over Palladium Nickel
Contact Mating Area Plating Material Thickness	.76 µm[30 µin]
Contact Current Rating (Max)	1.5 A

Mechanical Attachment

Connector Mounting Type	Board Mount
Mating Alignment Type	Multi-Purpose Center

Housing Features

Housing Material	Polyester GF
Centerline (Pitch)	2 mm[.078 in]

Dimensions

Backplane Module Length	50 mm

Usage Conditions

Operating Temperature Range	-55 – 125 °C[-67 – 257 °F]

Operation/Application

Shielded	No
Circuit Application	Power & Signal

Industry Standards

UL Flammability Rating	UL 94V-0

Packaging Features

Packaging Quantity	11
Packaging Method	Tube

Product Compliance

For compliance documentation, visit the product page on TE.com>

EU RoHS Directive 2011/65/EU	Compliant
EU ELV Directive 2000/53/EC	Compliant
China RoHS 2 Directive MIIT Order No 32, 2016	有害物质含量符合标准要求 No Restricted Substance(s) Above Threshold
EU REACH Regulation (EC) No. 1907/2006	Current ECHA Candidate List: JUNE 2025 (250) Candidate List Declared Against: JUNE 2025 (250) Does not contain REACH SVHC
Halogen Content	Not Low Halogen - contains Br or Cl > 900 ppm.
Solder Process Capability	Not applicable for solder process capability

Product Compliance Disclaimer

This information is provided based on reasonable inquiry of our suppliers and represents our current actual knowledge based on the information they provided. This information is subject to change. The part numbers that TE has identified as EU RoHS compliant have a maximum concentration of 0.1% by weight in homogenous materials for lead, hexavalent chromium, mercury, PBB, PBDE, DBP, BBP, DEHP, DIBP, and 0.01% for cadmium, or qualify for an exemption to these limits as defined in the Annexes of Directive 2011/65/EU (RoHS2). Finished electrical and electronic equipment products will be CE marked as required by Directive 2011/65/EU. Components may not be CE marked. Additionally, the part numbers that TE has identified as EU ELV compliant have a maximum concentration of 0.1% by weight in homogenous materials for lead, hexavalent chromium, and mercury, and 0.01% for cadmium, or qualify for an exemption to these limits as defined in the Annexes of Directive 2000/53/EC (ELV). Regarding the REACH Regulation, the information TE provides on SVHC in articles for this part number is based on the latest European Chemicals Agency (ECHA) 'Guidance on requirements for substances in articles' posted at this URL: https://echa.europa.eu/guidance-documents/guidance-on-reach

Compatible Parts

TE Part # 6645496-1
Z-PACK HM 2MM HDR TYPE A ASSY,

TE Part # 6645496-9
Z-PACK HM 2MM HDR TYPE A ASSY,

TE Part # 2170294-2
Z-PACK/A RAF 110P

TE Part # 6645436-1
2mm HM Type A MALE HDR 154P

TE Part # 5106726-1
Z-PACK/A M-HDR 110P

TE Part # 5352106-1
Z-PACK/A RAMH.110P.

TE Part # 2170313-2
Z-PACK A HEADER 110P

TE Part # 6645302-1
2MM H.M. TYPE "A" PIN ASSEMBLY

TE Part # 106137-2
Z-PACK/A SHRD.110P

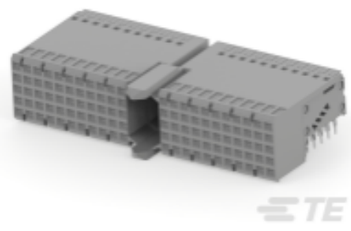

TE Part # 2392557-1
Z-PACK/A RAF 110P EON

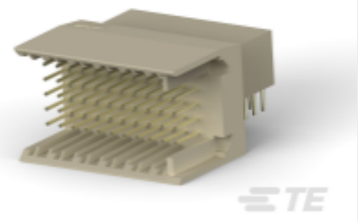

TE Part # CAT-472-Z1
Hard Metric Backplane Male Connector: Right Angle, Coplanar, 2mm

TE Part # 5352721-1
Z-PACK/A M-HDR.110P

TE Part # 6645301-1
2MM H.M. TYPE "A" PIN ASSEMBLY

TE Part # 6645303-1
2MM H.M. TYPE "A" PIN ASSEMBLY

TE Part # 122559-1
SEATING TOOL 2MM HM 7 ROW

TE Part # 2341384-1
2MM H.M. TYPE "A" PIN ASSY.

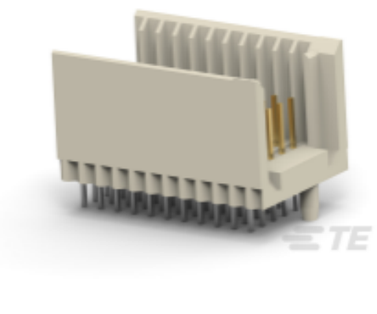

TE Part # CAT-472-Z12
Hard Metric Male Connector: Traditional Backplane, Mezzanine, 2mm

TE Part # 2170292-2
2MM H.M. TYPE "A" PIN ASSY.

TE Part # 2170312-2
2MM HM TYPE A RECPT ASSY

Also in the Series | Z-PACK 2mm HM

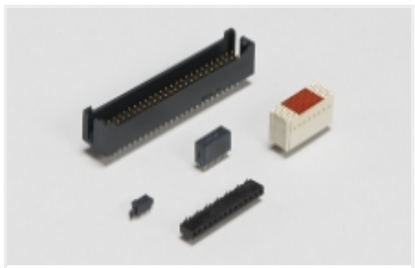

Board-to-Board Headers & Receptacles(46)

Connector Contacts(1)

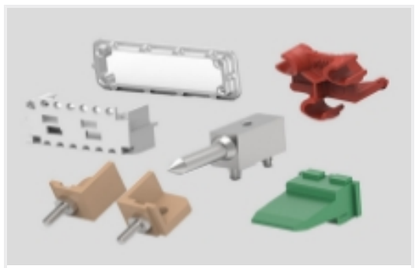

Connector Hardware(91)

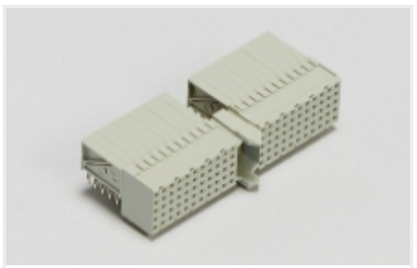

Hard Metric Backplane Connectors (264)

Power Contacts(1)

Rectangular Power Connectors(46)

Customers Also Bought

TE Part #1600902-1
INSERT MBXL 2 SIGNAL LOCK 4POS

TE Part #2-1879523-2
CRGH2512 1% 16R5 2W

TE Part #2-2170754-6
CAGE ASSY, QSFP28 1X1, GASKET, HS, LP

TE Part #4-2364427-8
PCIE GEN5 CON,SMT,164P,15u Au, MYLAR,HT

TE Part #2384218-3
SLIVER 2.0 4C+ vertical receptacle

TE Part #5223986-2
UPM KEYED GUIDE MODULE

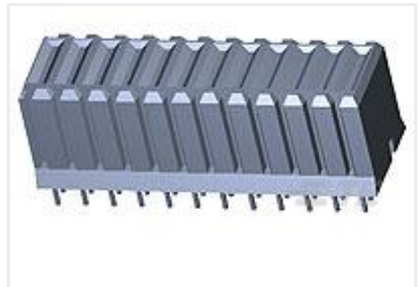

TE Part #5223995-1
TE UPM Ver Receptacle 4P STD Power

TE Part #5535034-5
ASSY,RECEPTACLE,EUROCARD,TYPE C/2,L-FREE

TE Part #1645553-5
UPM EXPANDED RCPT ASSEMBLY Hi-CURRENT

TE Part #5352721-1
Z-PACK/A M-HDR.110P

Documents

Product Drawings

Z-PACK/A RAF 110P

English

CAD Files

Customer View Model

ENG_CVM_CVM_5100147-1_B.2d_dxf.zip

English

3D PDF

3D

Customer View Model

ENG_CVM_CVM_5100147-1_B.3d_igs.zip

English

Customer View Model

ENG_CVM_CVM_5100147-1_B.3d_stp.zip

English

By downloading the CAD file I accept and agree to the Terms and Conditions of use.

Product Specifications

Application Specification

English