This document is the property of Amphenol Corporation and is delivered on the express condition that it is not to be disclosed, reproduced or used, in whole or in part, for manufacture or sale by anyone other than Amphenol Corporation without its prior concert, & that no right is granted to disclose or to use any information in this document.

REVISIONS				
SYM	ECN	DESCRIPTION	DATE	APPROVED
1		New release	10/19/09	IP
2		Dim,s correction	03/11/11	IP

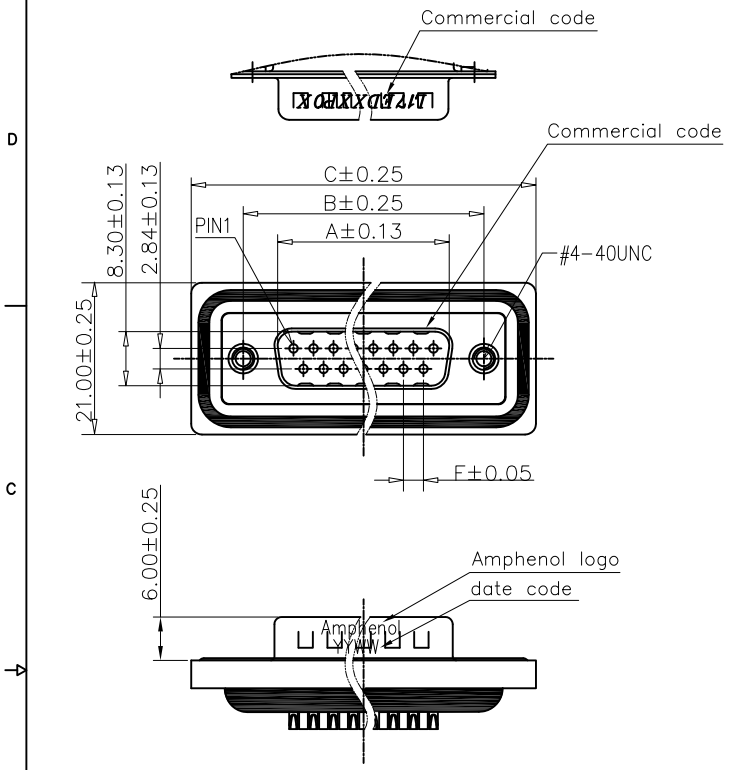

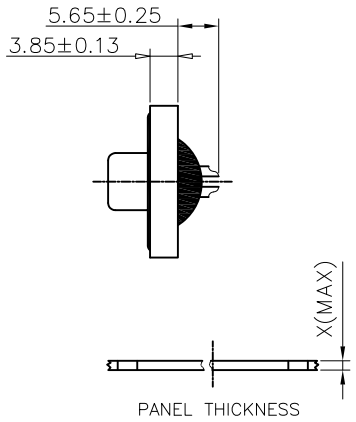

PANEL THICKNESS

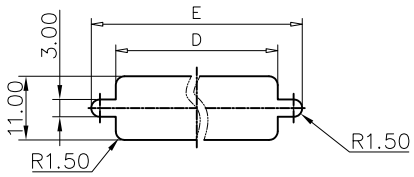

RECOMMENDED PANEL CUT-OUT

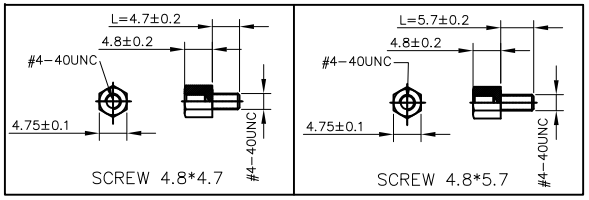

Customer drawing

POSITION	A	B	C	D	E	F(PITCH)
9	16.92	24.99	39.40	20.00	28.20	2.77
15	25.30	33.32	47.70	28.00	36.50	2.77
25	38.96	47.04	64.50	41.50	51.00	2.77
37	55.42	63.50	80.78	57.80	67.30	2.77

D-SUB TECHNICAL DATA

SHELL : Steel, 1.25um(50u") min nickel
BODY : Glass filled thermoplastic.
flame retardant to UL94 V-0 color Black
PLATE : Glass filled thermoplastic.
flame retardant to UL94 V-0 color Black
CONTACTS : Brass, gold over 50u" min nickel.(According to the P/N)
SCREWLOCK : Brass, 50u" min nickel
O RING : Silicone Color: Blue
EPOXY: Color: Black
REAR INSERT : Brass, 50u" min nickel
ELECTRICAL : Voltage rating : 300 V RMS at 50 Hz
Current rating : 5A
Insulation resistance >5000 M Ohms
Contact resistance 20mOhms max.
MARKING : Amphenol logo
Commercial code
Manufacturing date(YYWW)

Amphenol Shenzhen RoHS Compliant EU2002/95/EC

NOTE : Screw L=4.7 For Panel Thickness
Under X=1.2mm
Screw L=5.7 For Panel Thickness
Between X=1.2~2.0mm

PRODUCT CODE

L 17ED XX P 0 X

- L: RoHS Compliance
- 17ED: standard density series
- Number of contacts Standard density: 09, 15, 25, 37
- Contact type P: Pin
- Termination: 0: Solder cup
- Contact plating: 0: gold flash 1: 0.38um(15u") 2: 0.76um(30u")

UNLESS OTHERWISE SPECIFIED TOLERANCES

	U.S.	METRIC
.X +/-		0.50
.XX +/-		0.30
.XXX +/-		0.20
FRACTIONS +/-		
ANGLES +/-		2°

FOR MATERIALS AND FINISHES SEE NOTES
REMOVE SHARP EDGES
DIMENSIONS U.S. INCHES METRIC MM

APPROVAL		DATE
DRAWN	Lamon. He	03/10/11
CHECKED	Lik Wang	03/10/11
CHECKED		

DRAWING FILE :

ANGLE OF PROJECTION

Amphenol
Amphenol East Asia Limited

TITLE
D-sub Waterproof, ED series
male Solder cup type

SIZE	DRAWING NO.	REV.
A4	C L17EDXXP0X	2
SCALE	NONE	SHEET 1 OF 1