© 2025 TE Connectivity. All Rights Reserved.

PRINT: 10 D1

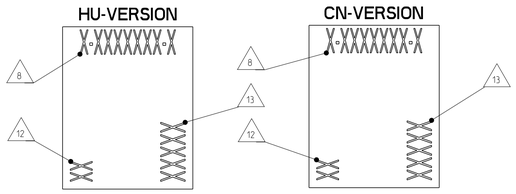

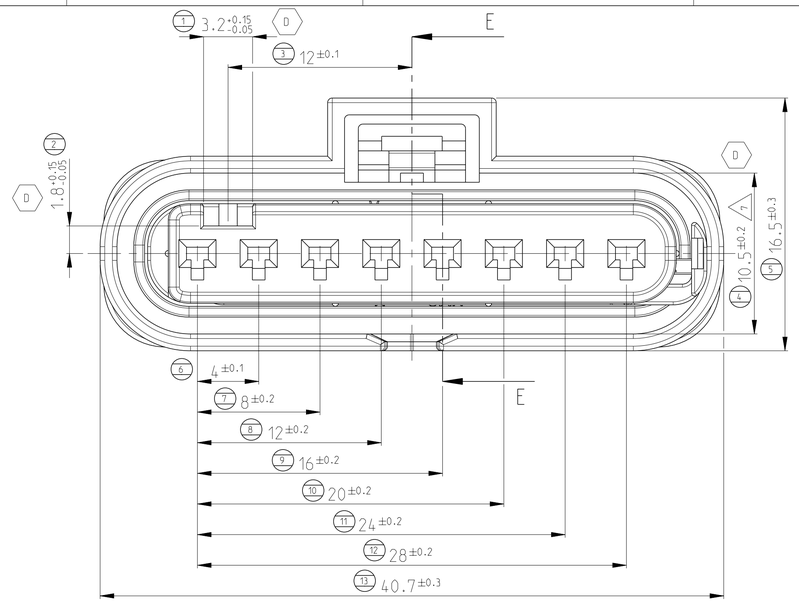

REVISIONS					
P	LTR	DESCRIPTION	DATE	DWN	APVD
	C	SEE ECR-10-018119	31AUG2010	CLA	ASC
	C1	TOLERANCE VALUES UPDATED	08NOV2017	GK	SZN
	D	OUTER HSG DESIGN UPDATED	13OCT2020	GR	SZN
	D1	GENERAL UPDATE. LASER-PRINT DETAILS	31JUL2025	SZN	LSZ

CODINGS
M 2:1

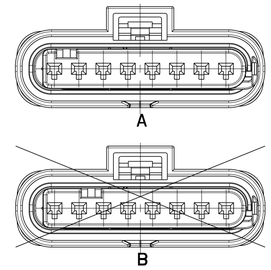

NOTES:

1 USABLE CONTACTS MCON 1.2
SEE TE-NO. 1452674. VERSION SINGLE WIRE SEAL

2 MAX. WIRE SIZE RANGE 1.0 mm² FLR PERMITTED
FOR CAVITY-Ø 3.55MM
QUANTITY SEE WIRE HARNESS DRAWING
CURRENT CARRYING CAPACITY OF THE SINGLE CONTACT
SEE PRODUCT SPECIFICATION NO.108-18782

3 TE RELEVANT IDENTIFICATION AND TRACKING NUMBERS

4 SPACE OF ACTIVITY

5 -

6 SUPPLY CONDITION: RETAINER IN PRELOCKED POSITION

7 WARPAGE PERMITTED TO MAX. -0.5mm

8 TE ORDER-NO.

9 ACCORDING TO INTERFACE DRAWING
SEE TE-NO. 114-18679-3

10 AREA FOR PRINT WITH CUSTOMER RELEVANT MARKING

11 TE TRADEMARK

12 ASSEMBLY LINE SEGMENT IDENTIFICATION

13 DATE CODE (DDDYY)

CODING A 1-...-1 AS SHOWN

A-A

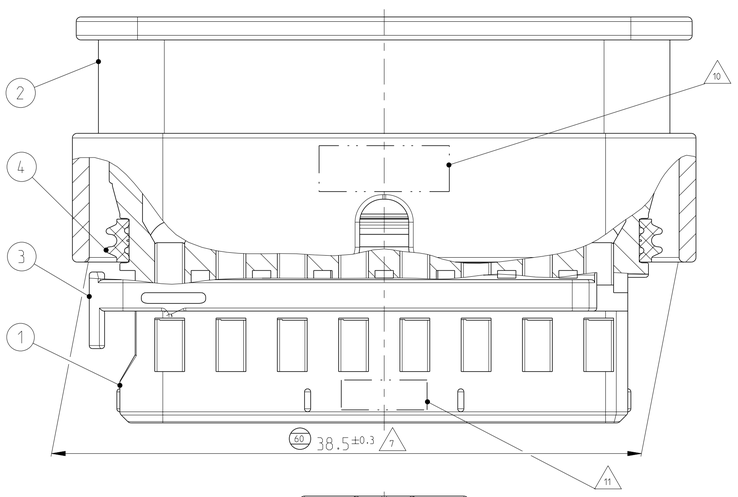

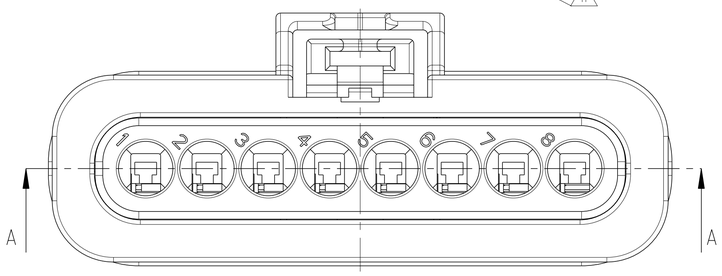

E-E

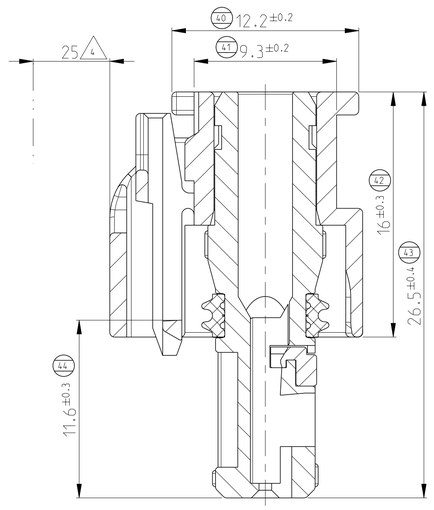

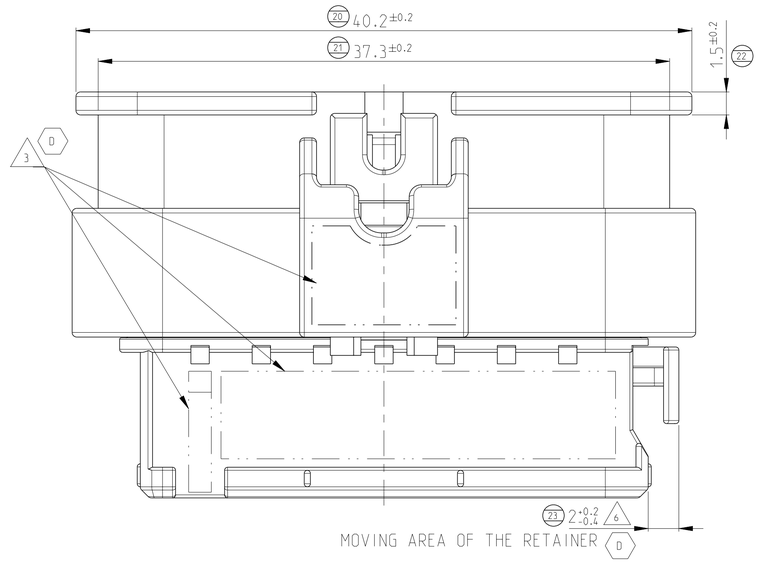

RETAINER IN END POSITION
3:1

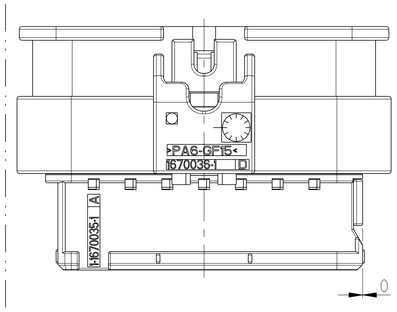

3D VIEW
3:1

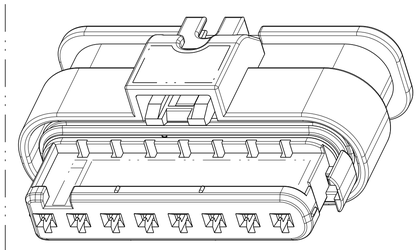

TE-ORDER-NO. 8	COD	TITLE	REV	QTY	TITLE	MATERIAL	SURFACE/COLOUR	ITEM
2-1670920-1	B	8pos. MCON 1.2 - LL Connector, Sealed	C	1	8pos. MCON 1.2 - Seal	MVQ	NATURE -	4
				1	8pos. MCON 1.2 - Retainer	PA66-GF15	VIOLETT SIML. RAL 4006	3
				1	8pos. MCON 1.2 - Protec. Cover	PA6-GF15	BLACK RAL 9011	2
				1	8pos. MCON 1.2 - Rec. Hsg.	PA66-GF30	NATURE	1
1-1670920-1 D	A	8pos. MCON 1.2 - LL Connector, Sealed	D	1	8pos. MCON 1.2 - Seal	MVQ	NATURE -	4
				1	8pos. MCON 1.2 - Retainer	PA66-GF15	VIOLETT SIML. RAL 4006	3
				1	8pos. MCON 1.2 - Protec. Cover	PA6-GF15	BLACK RAL 9011	2
				1	8pos. MCON 1.2 - Rec. Hsg.	PA66-GF30	BLACK RAL 9011	1

TOLERANCES UNLESS OTHERWISE SPECIFIED ACC. TO DIN 16901-1400 CENTRIC TO NOMINAL DIMENSION. EDITION 1982-11 SHALL APPLY.

THIS DRAWING IS A CONTROLLED DOCUMENT.

DIMENSIONS: mm

TOLERANCES UNLESS OTHERWISE SPECIFIED: 0 PLC ±; 1 PLC ±; 2 PLC ±; 3 PLC ±; 4 PLC ±; ANGLES ±2°

MATERIAL -

FINISH -

DWN R. Bachmann 19DEC2006
CHK A. Schroebel -
APVD -
PRODUCT SPEC 108-18969
APPLICATION SPEC 114-18861
WEIGHT 8.0g

TE Connectivity

NAME 8pos. MCON 1.2 - LL Connector, Sealed

SIZE A1 | CAGE CODE 00779 | DRAWING NO C-1670920 | RESTRICTED TO -

CUSTOMER DRAWING | SCALE 5:1 | SHEET 1 OF 1 | REV D1

4805 (3/13)