CUI Devices is now Same Sky! Learn More

SERIES: PR23 | DESCRIPTION: POWER RELAY

FEATURES

- 5V/12V/24V
- SPST & SPDT
- 900 mW

MODEL

	coil voltage typ (Vdc)	coil resistance (Ω±10%)	operating voltage min (Vdc)	release voltage max (Vdc)	coil power max (mW)
PR23-5V-900-1A	5	27.8	3.5	0.5	900
PR23-12V-900-1A	12	160	8.4	1.2	900
PR23-24V-900-1A	24	640	16.8	2.4	900
PR23-5V-900-1C	5	27.8	3.5	0.5	900
PR23-12V-900-1C	12	160	8.4	1.2	900
PR23-24V-900-1C	24	640	16.8	2.4	900

Notes: 1. All specifications are measured at 23°C unless otherwise specified.

PART NUMBER KEY

PR23 - XX - 900 - XX

Base Number

Coil Voltage (Vdc):
5V = 5
12V = 12
24V = 24

Contact Form:
1A = 1 Form A
1C = 1 Form C

CONTACT SPECIFICATIONS

parameter	conditions/description	min	typ	max	units
contact form	1 Form A, 1 Form C				
contact material	Ag alloy				
contact rating	1 Form A: 30 A @ 125 Vac, 30 A @ 24 Vdc 1 Form C: NO/NC: 20 A / 15 A @ 125 Vac, 20 A / 15 A @ 24 Vdc				
contact resistance	at 6 Vdc, 1.0 A			100	mΩ
max switching voltage				250 28	Vac Vdc
max switching current				30	A
max switching power				7,500 560	VA W
min switching load	5 Vdc, 100 mA				
life	electrical mechanical		100,000 10,000,000		operations operations

GENERAL SPECIFICATIONS

parameter	conditions/description	min	typ	max	units
insulation resistance	at 500 Vdc	1,000			MΩ
dielectric strength	between open contacts for 1 minute between coil and contacts for 1 minute		1,500 2,500		Vac Vac
operate time				15	ms
release time				10	ms
shock resistance	endurance misoperation		1,000 100		m/s^2 m/s^2
vibration resistance	endurance: 10~55 Hz, 1.5 mm double amplitude misoperation: 10~55 Hz, 1.5 mm double amplitude				
operating temperature		-40		85	°C
humidity	at 40°C	35		95	%RH
weight			27.0		g
safety approvals	UL/cUL 508				
flammability rating	UL94V-0				
RoHS	yes				
packaging	tray: 50 pcs per tray carton size: 438 x 345 x 241 mm carton QTY: 500 pcs per carton				

SOLDERABILITY

parameter	conditions/description	min	typ	max	units
hand soldering	for 3.5±0.5 seconds	340	350	360	°C
wave soldering	for 10±1 seconds	255	260	265	°C

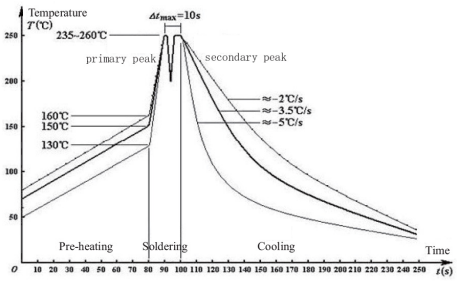

Double-wave Soldering Curve

MECHANICAL DRAWING (1A = 1 FORM A)

units: mm
tolerance: ±0.3 mm
unless otherwise noted

ITEM	DESCRIPTION	MATERIAL	PLATING/COLOR
A	housing	PBT (UL94V-0)	black
B	terminals	copper covered steel	tin

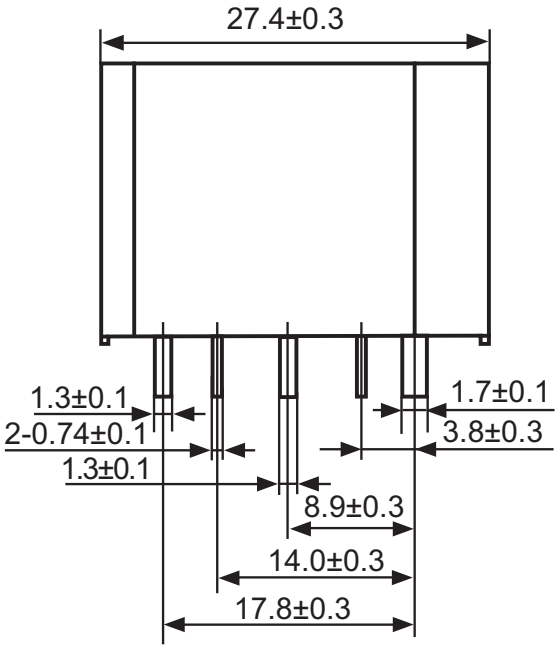

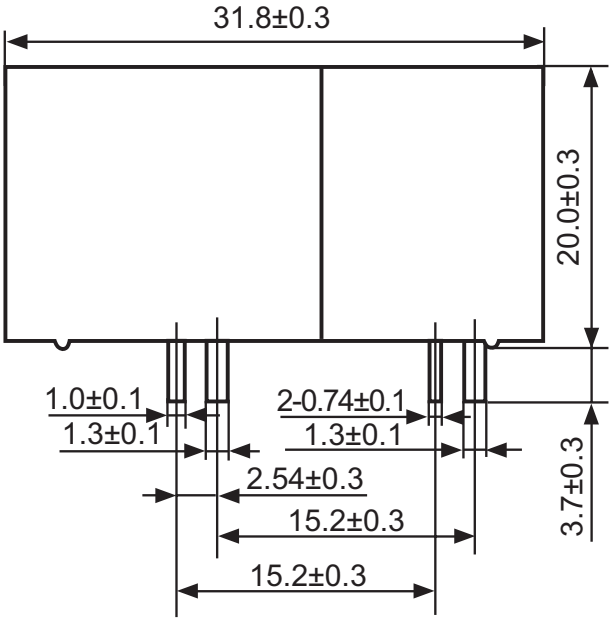

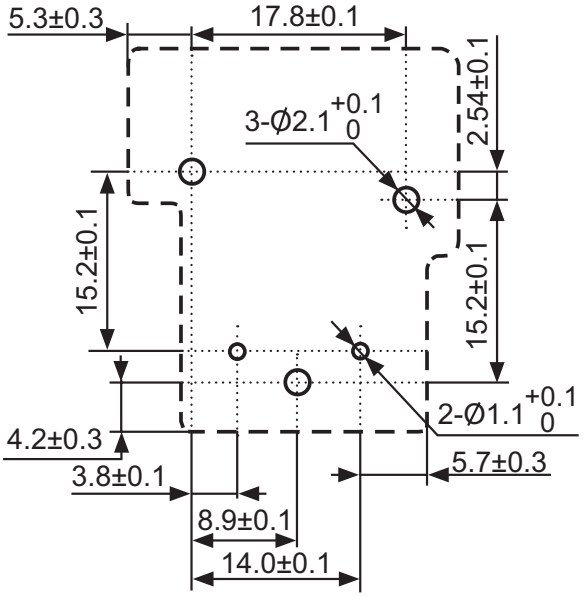

Recommended PCB Layout
Bottom View

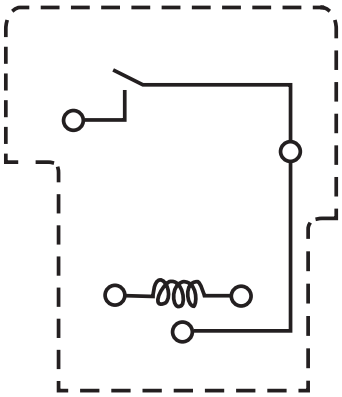

Wiring Diagram
Bottom View

MECHANICAL DRAWING (1C = 1 FORM C)

units: mm
tolerance: ±0.3 mm
unless otherwise noted

ITEM	DESCRIPTION	MATERIAL	PLATING/COLOR
A	housing	PBT (UL94V-0)	black
B	terminals	copper covered steel	tin

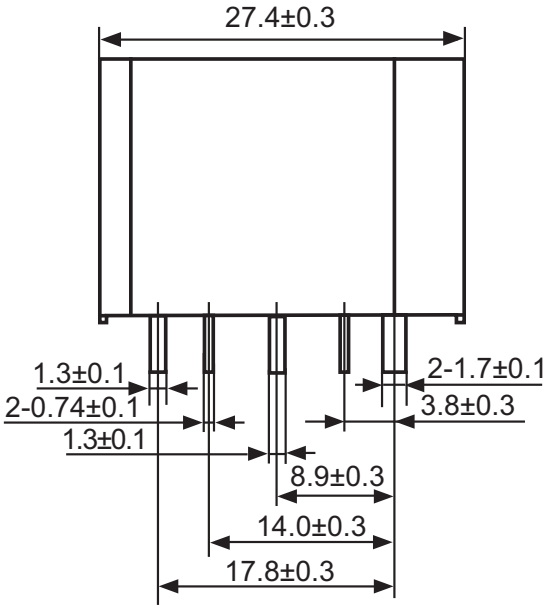

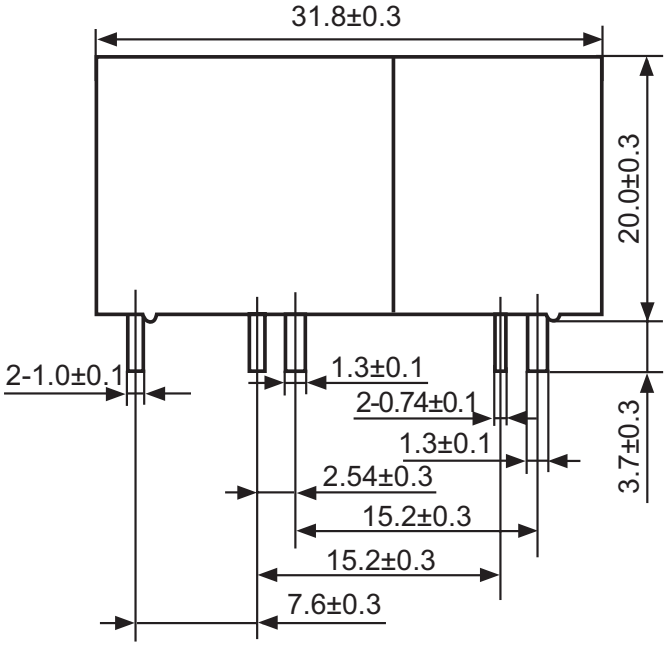

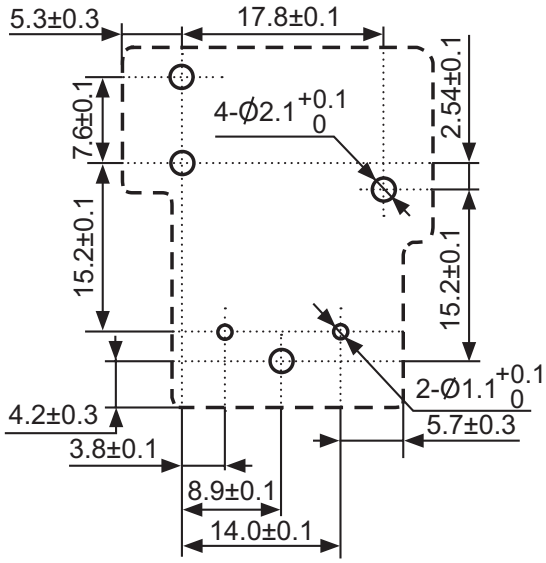

Recommended PCB Layout
Bottom View

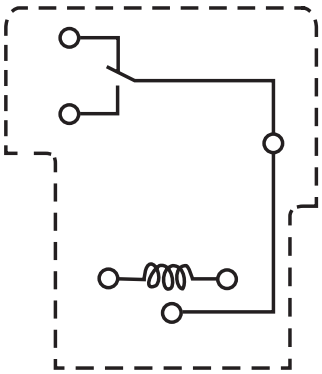

Wiring Diagram
Bottom View

CHARACTERISTIC CURVES

Time Curve

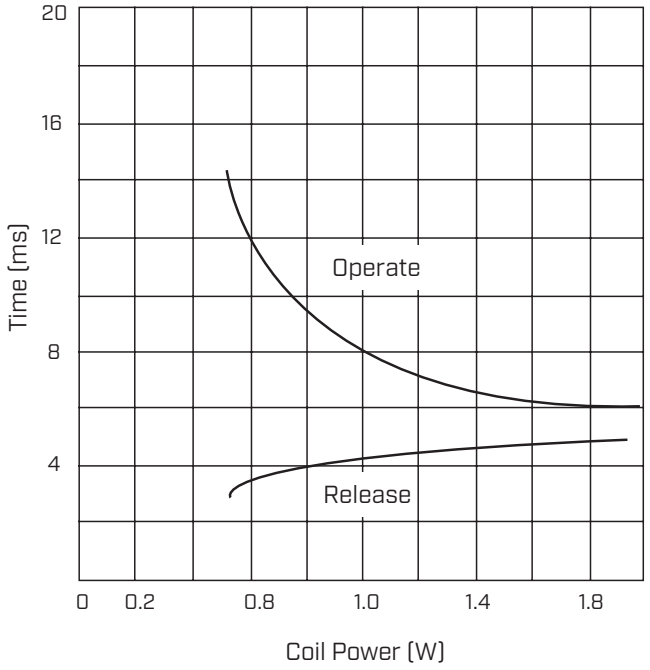

Coil Temperature Rise

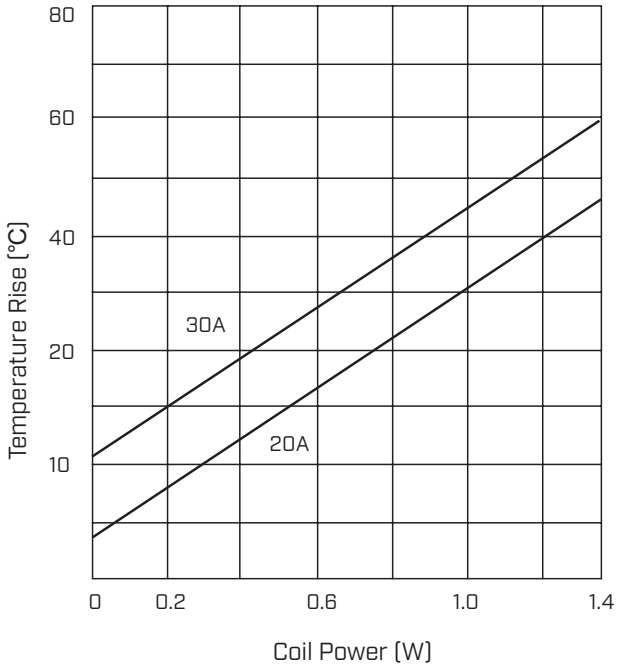

Life Curve

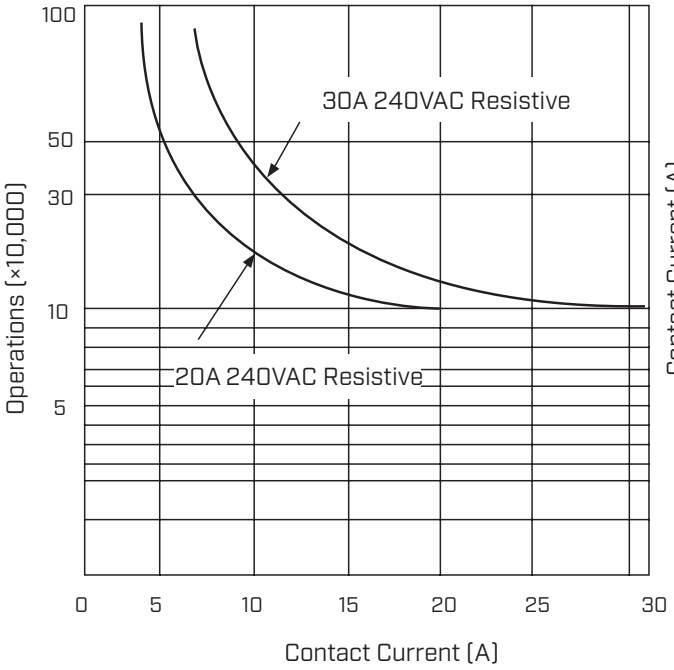

Maximum Switching Power

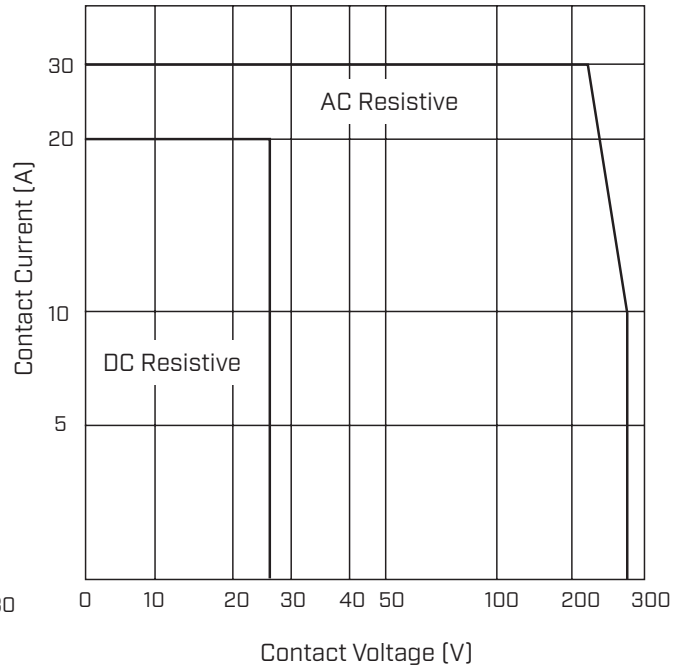

REVISION HISTORY

rev.	description	date
1.0	initial release	08/15/2022
1.01	CUI Devices rebranded to Same Sky	09/12/2024
1.02	updated drawings	06/27/2025

The revision history provided is for informational purposes only and is believed to be accurate.

Same Sky offers a one (1) year limited warranty. Complete warranty information is listed on our website.

Same Sky reserves the right to make changes to the product at any time without notice. Information provided by Same Sky is believed to be accurate and reliable. However, no responsibility is assumed by Same Sky for its use, nor for any infringements of patents or other rights of third parties which may result from its use.

Same Sky products are not authorized or warranted for use as critical components in equipment that requires an extremely high level of reliability. A critical component is any component of a life support device or system whose failure to perform can be reasonably expected to cause the failure of the life support device or system, or to affect its safety or effectiveness.