DFLK-D50 SUB/B - Termination board

2287669

https://www.phoenixcontact.com/us/products/2287669

Please be informed that the data shown in this PDF document is generated from our online catalog. Please find the complete data in the user documentation. Our general terms of use for downloads are valid.

The VARIOFACE feed-through module implements a 1:1 connection between plug-in screw connection terminal blocks and a D-SUB miniature female strip (number of positions: 50). There is no separate ground pick-off available.

Your advantages

- 9-pos. ... 50-pos.
- 50-pos.: no ground pick-off
- 9-☐...☐37-pos.: separate ground pick-off
- In accordance with IEC☐60807-2
- 1:1 connection
- Screw connection
- D-SUB 4-40 UNC thread

Commercial data

Item number	2287669
Packing unit	5 pc
Minimum order quantity	1 pc
Note	Made to order (non-returnable)
Sales key	C422
Product key	DK21C2
GTIN	4017918102159
Weight per piece (including packing)	162.8 g
Weight per piece (excluding packing)	162 g
Customs tariff number	85369010
Country of origin	DE

Technical data

Product properties

Product type	Interface module
Product family	VARIOFACE
Number of positions	50

Insulation characteristics: Air clearances and creepage distances

Insulation	Functional insulation
Overvoltage category	II
Pollution degree	2

Electrical properties

Operating voltage (AC)	≤ 30 V AC
Operating voltage (DC)	≤ 60 V DC
Current (per branch)	≤ 2.5 A
Current (Total current)	≤ 50 A (50 °C)

Air clearances and creepage distances

Rated insulation voltage	125 V
Rated surge voltage	1.2 kV (1.2/50 µs)

Connection data

Connection 1 (control level)

Connection in acc. with standard	IEC 60807-2
Connection method	D-SUB socket strip
Screw thread	UNC 4-40
Number of connections	1
Number of positions	50
Insertion/withdrawal cycles	> 500
Pitch	2.77 mm

Connection 2 (field level)

Connection method	Screw connection
Stripping length	8 mm
Screw thread	M3
Number of positions	16
Conductor cross-section rigid	0.2 mm² ... 4 mm²
Conductor cross-section rigid (2 conductors with same cross section)	0.2 mm² ... 1.5 mm²
Conductor cross-section flexible	0.2 mm² ... 2.5 mm²
	0.25 mm² ... 2.5 mm² (Ferrule without plastic sleeve)
	0.25 mm² ... 2.5 mm² (Ferrule with plastic sleeve)
Conductor cross-section flexible (2 conductors with same cross section)	0.2 mm² ... 1.5 mm²
	0.25 mm² ... 0.75 mm² (Ferrule without plastic sleeve)

	0.5 mm² ... 1.5 mm² (TWIN ferrule with plastic sleeve)
Conductor cross-section AWG	24 ... 12
Tightening torque	0.5 Nm ... 0.6 Nm
Pitch	5 mm

Signaling

Status display present	no

Dimensions

Item dimensions

Width	39.88 mm
Height	143.4 mm
Depth	33.07 mm

Material specifications

Color	gray (RAL 7042)
Housing insulation material	Polyamide PA non-reinforced

Environmental and real-life conditions

Ambient conditions

Degree of protection (Module)	IP20
Degree of protection (Installation location)	≥ IP54
Ambient temperature (operation)	-20 °C ... 50 °C
Ambient temperature (storage/transport)	-20 °C ... 70 °C
Altitude	≤ 2000 m

Approvals

UKCA

Certificate	UKCA-compliant

Standards and regulations

Air clearances and creepage distances

Standards/regulations	EN IEC 60664-1

Mounting

Mounting type	Rear mounting
Mounting position	any

Notes

Notes on operation	For proper use, the specifications of the installation directive (see Downloads) must be observed. For applications or use with third-party products, the specifications, and the safety and warning instructions of the respective third-party manufacturer must also be met.

Drawings

Dimensional drawing

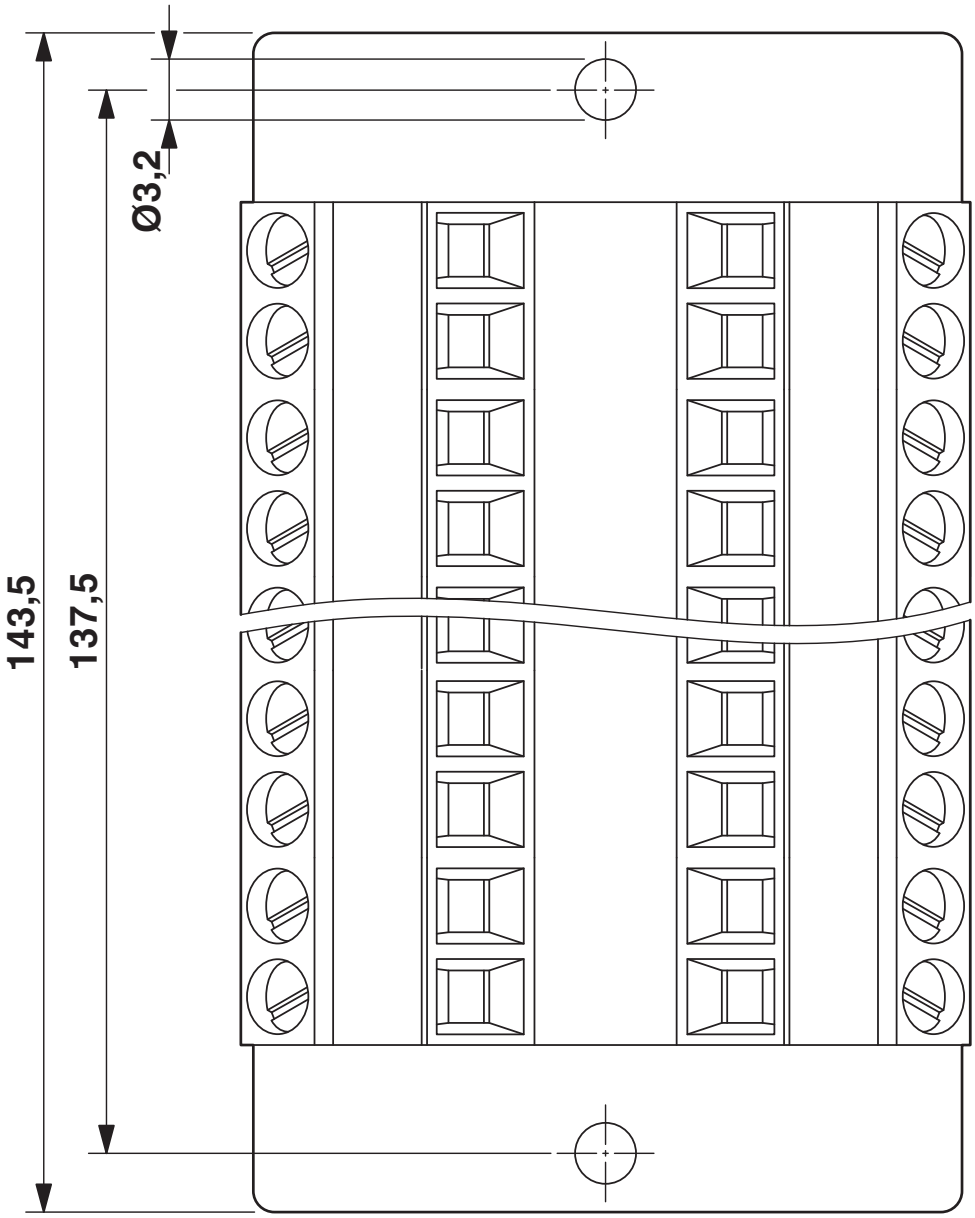

Dimensional drawing

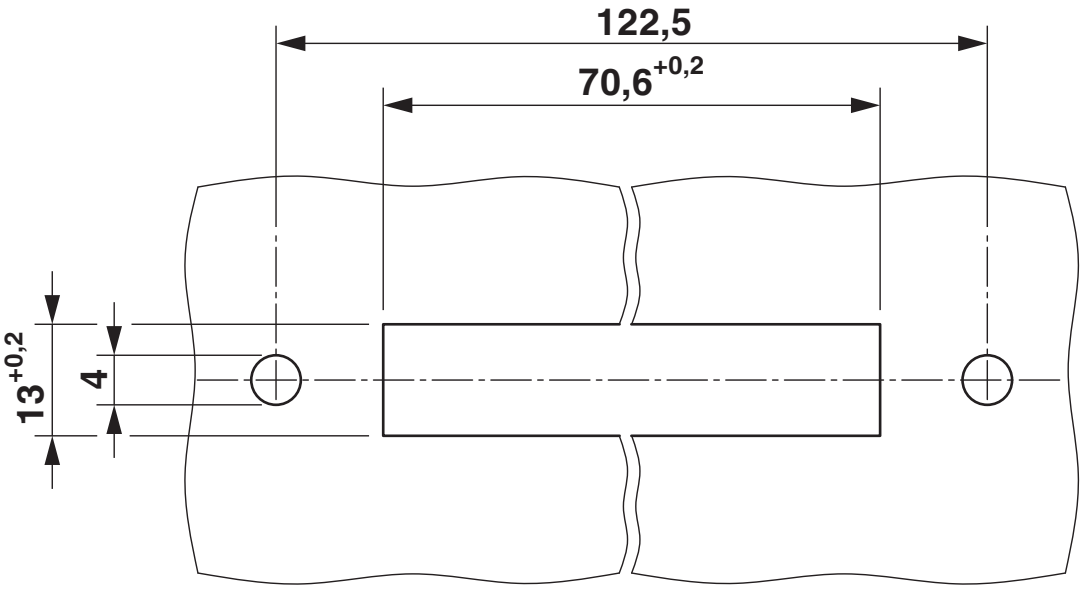

Dimensional drawing

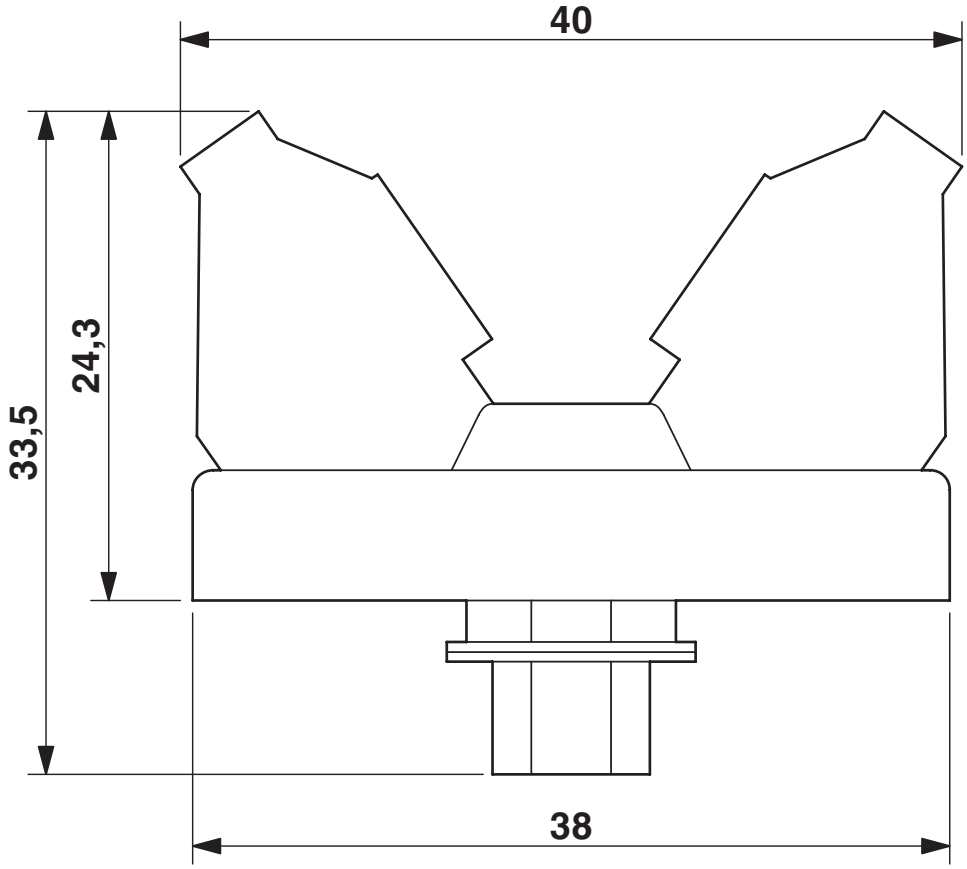

Approvals

To download certificates, visit the product detail page: https://www.phoenixcontact.com/us/products/2287669

cUL Recognized
Approval ID: FILE E 60425

	Nominal voltage U_N	Nominal current I_N	Cross section AWG	Cross section mm^2
keine				
	125 V	2.5 A	30 - 12	-

UL Recognized
Approval ID: FILE E 60425

	Nominal voltage U_N	Nominal current I_N	Cross section AWG	Cross section mm^2
keine				
	125 V	2.5 A	30 - 12	-

Classifications

ECLASS

ECLASS-13.0	27141152
ECLASS-15.0	27141152

ETIM

ETIM 9.0	EC002780

UNSPSC

UNSPSC 21.0	39121400

Environmental product compliance

EU RoHS

Fulfills EU RoHS substance requirements	Yes, No exemptions

China RoHS

Environment friendly use period (EFUP)	EFUP-E
	No hazardous substances above the limits

EU REACH SVHC

REACH candidate substance (CAS No.)	No substance above 0.1 wt%

Phoenix Contact 2025 © - all rights reserved
https://www.phoenixcontact.com

Phoenix Contact USA
586 Fulling Mill Road
Middletown, PA 17057, United States
(+717) 944-1300
info@phoenixcon.com