Small I/O connectors for AC adapters

RP34 Series

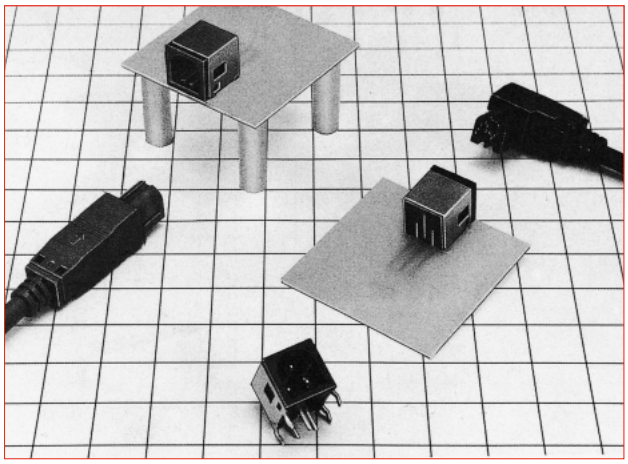

■Features

1. Superior mating operability

A snap-and-lock style allows easy mating/ unmating.

2. Cable direction is variable

The three-position, right-angled plug makes it possible to arrange the cable to the left or right, offering flexible wiring options depending on your requirement.

3. Sequential contact mating

Designed with sequential contact mating, one pin makes contact with its counterpart sooner than the others and establishes a securely grounded connection.

4. Easy plug assembly

A snap-together case eliminates the need for screws to fasten the case and helps provide for a quick plug assembly.

5. Variations

Items	
Number of contacts	3 or, 4
Connector type	Plug : Straight, right angle Receptacle : Right angle
Plug termination version	Crimp
Receptacle termination version	PCB dip
Receptacle mounting method	PCB dip

■Product Specifications

Ratings	Rated current	3A	Operating temperature range	-10 to +60℃
	Rated voltage	AC30V, DC42V	Storage temperature range	-10 to +60℃

Items	Specifications	Conditions
1. Contact resistance	30mΩ max	Measured at DC 1A
2. Insulation resistance	1,000MΩ min	Measured at DC 100V
3. Withstanding voltage	No flashover or dielectric breakdown.	AC 150V for 1 minute
4. Vibration resistance	No electrical discontinuity for 10μs or longer.	10 to 55Hz/cycle, amplitude : 0.75mm, 3 axis directions, 2 hours each
5. Shock resistance	No electrical discontinuity for 10μs or longer.	Acceleration : 490m/s^2, duration : 11ms, 3 axis directions, 3 cycles each
6. Mating Cycles	Contact resistance : 60mΩ max.	3 contacts : 5,000 times, 4 contacts : 1,000 times
7. Temperature cycle	Insulation resistance : 100MΩ min.	-55℃ : 30 minutes → Normal temperature : 10 to 15 minutes → 85℃ : 30 minutes→ Normal Temperature : 10 to 15 minutes, left for 5 cycles
8. Moisture resistance	Insulation resistance: 10MΩ min (at high humidities). 100MΩ min (when dry).	Temperature : 40℃, relative humidity : 90 to 95%, left for 96 hours

■Materials / Finish

Items		Material	Finish	Remarks
Plug	Exterior, insulator	Polycarbonate resin	————	UL94V-0
	Clamp	Brass	————	————
	Bushing	Vinyl chloride resin	————	————
Receptacle	Exterior, insulator	PBT resin	————	UL94V-0
		Steel	Tin plating	————
	Male contact	Brass	Silver plating	————
Crimped female contact	Female contact	Phosphor bronze	Silver plating	————

Aug.1.2025 Copyright 2025 HIROSE ELECTRIC CO., LTD. All Rights Reserved.

■Product Number Structure

Refer to the chart below when determining the product specifications from the product number.
Please select from the product numbers listed in this catalog when placing orders.

●Connector

RP34 - 8 SP - 3 S C (71)

❶ ❷ ❸ ❹ ❺ ❻ ❼

❶Model name : RP34 Series
❷Shell size : The shell size is the outer diameter of the mating end of the plug.
❸Shell type SP : Straight plug P : Right-angled plug R : Receptacle
❹Number of contacts :
❺Contact form P : Male contact S : Female contact
❻Contact termination method : C : Crimp contact termination DL : Right-angled dip method
❼ Other specifications : A two-digit character is added to indicate other specifications.

●Crimp contact

RP34 - SC - 2 1 2

❶ ❽ ❾ ❿ ⓫

❶Model name : RP34 Series
❽Contact type : SC = Crimped female contact
❾Contact packaging types : 1 : Loose piece contacts 2 : Reel contacts
❿Applicable wire : 1 : For 18 to 22 AWG 2 : For 24 to 28 AWG
⓫Identification of plating : 2 : Silver plating

Aug.1.2025 Copyright 2025 HIROSE ELECTRIC CO., LTD. All Rights Reserved.

■Straight plug

RP34-8SP-3SC(71)

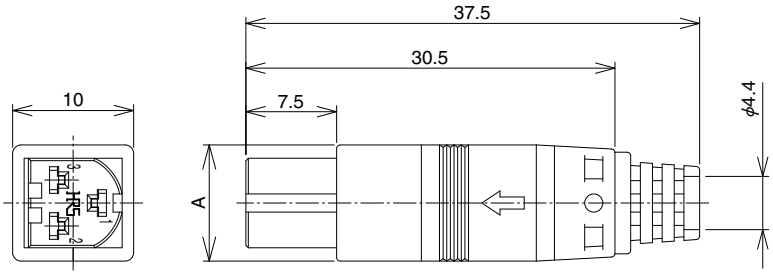

(This figure is a representative example.)

Part No.	HRS No.	No. of contacts	A	Remarks
RP34-8SP-3SC(71)	113-5049-1 71	3	9.6	―――
RP34-8SP-3SCD(71)	113-5061-7 71			Mating key dependent type
RP34-8SP-4SC(71)	113-5097-4 71	4	11	―――

Note : Cable clamping force, cable rotation force, and other aspects may differ depending on the cable construction.
We reccomend that you verify the suitability of the cable assembly before use or production.

■Right-angled plug

RP34-8P-3SC(71)

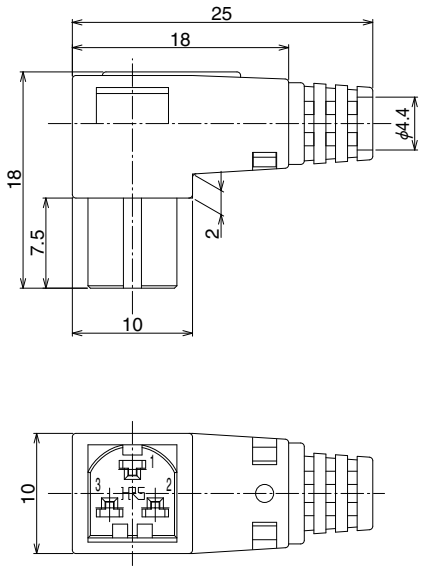

(This figure is a representative example.)

Part No.	HRS No.
RP34-8P-3SC(71)	113-5041-0 71

Note : Cable clamping force, cable rotation force, and other aspects may differ depending on the cable construction.
We recommend that you verify the suitability of the cable assembly before use or production.

Aug.1.2025 Copyright 2025 HIROSE ELECTRIC CO., LTD. All Rights Reserved.

■Receptacle

RP34-8R-3PDL

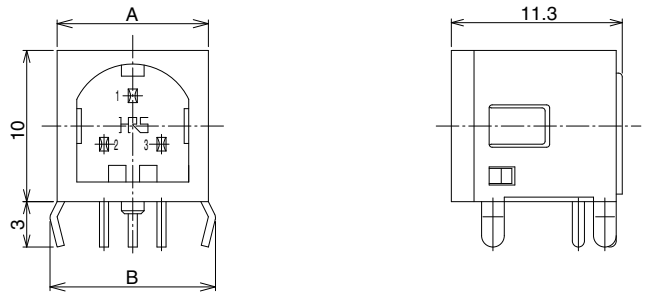

(This figure is a representative example.)

Part No.	HRS No.	No. of contacts	A	B	Remarks
RP34-8R-3PDL	113-5042-2	3	10	11	————
RP34-8R-3PDLD	113-5066-0				Mating key dependent type
RP34-8R-4PDL	113-5098-7	4	11	12	————

◆Contact (female contact)

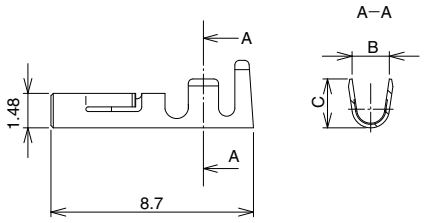

Part No.	HRS No.	B	C	Applicable wire size	Remarks
RP34-SC-212	113-5043-5	1.6	2.1	18 to 22 AWG	Reel contacts
RP34-SC-112	113-5076-4	1.6	2.1	18 to 22 AWG	Loose piece contacts
RP34-SC-222	113-5100-7	1.2	1.35	24 to 28 AWG	Reel contacts
RP34-SC-122	113-5102-2	1.2	1.35	24 to 28 AWG	Loose piece contacts

Note : Loose piece contacts are packaged 100 pcs/pack and reel contacts are available on 10,000 piece reel. Please order in full quantity packs or reels.

◆Dip post arrangement for PCB layout

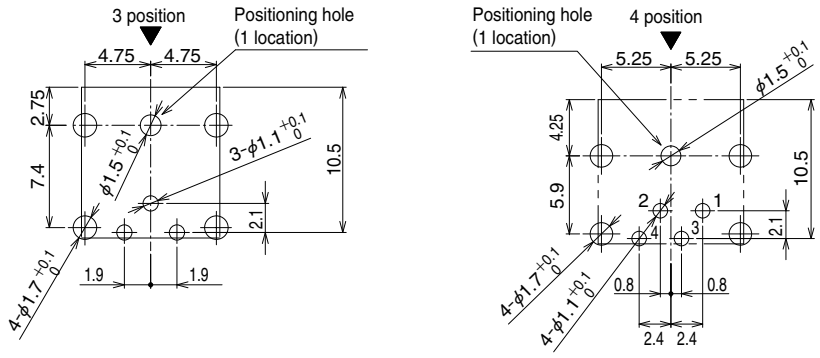

Remarks 1. The applicable PCB thickness is between 0.8 and 1.6mm.
2. A machining tolerance of ±0.05 is recommended for the PCB layout.
3. The above figure shows the PCB side of the rack into which contact dip posts will be inserted.
"▼" mark indicates the plug interface mating side.

Aug.1.2025 Copyright 2025 HIROSE ELECTRIC CO., LTD. All Rights Reserved.

◆Termination procedure

●Straight plug

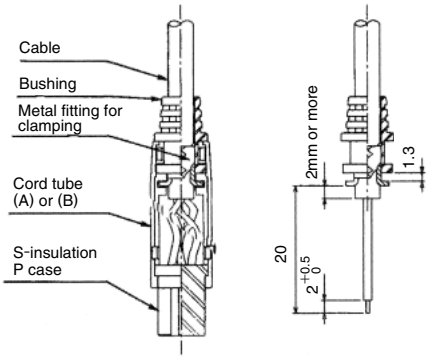

Operation procedure—straight plug

1. First, pass the prepared cable through the bushing, and then crimp and terminate the contacts.
2. Assemble the crimped and terminated contacts into the contact holes of the S-insulation P case.
   At this time, please make sure that the crimped contacts are securely engaged onto the contact holes of the S-insulation P case by lightly pulling on the cable.
3. Crimp and fix the metal fitting for clamping with the applicable tool (RP34-TC-01).
4. Assemble the S-insulation P case, metal fitting for clamping, and bushing onto the cord tube (A). The S-insulation P case can be assembled in two ways, at 180° opposing angles. Please make sure to select the orientation that is suitable for your purpose.
5. Finally, assemble the remaining cord tube (B). The assembly has been completed.

●Rightangle plug

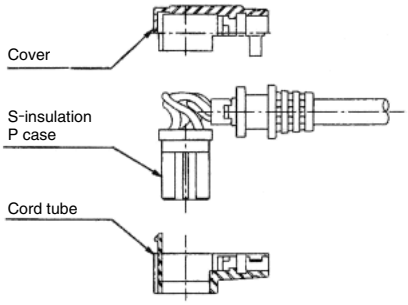

Operation procedure—right-angled plug

1. The right-angled plugs can be assembled in the same manner as the straight plugs, and the S-insulation P case can be assembled to the cord tube in one of two positions. 180° opposite each other. Please make sure to select the orientation that is suitable for your purpose.

◆Applicable tools

Type	Items	Part No.	HRS No.	Applicable contact	Applicable wire size
Machine crimping	Automatic crimping press	CM-105C	901-0001-0	————	————
	Applicator	AP105-RP34-1	901-2025-2	RP34-SC-212	18 to 22 AWG
		AP105-RP34-2	901-2034-3	RP34-SC-222	24 to 28 AWG
Cable crimping tool		RP34-TC-01	150-0074-1	————	————
Extraction tool		RP34-SC-TP	150-0072-6	————	————

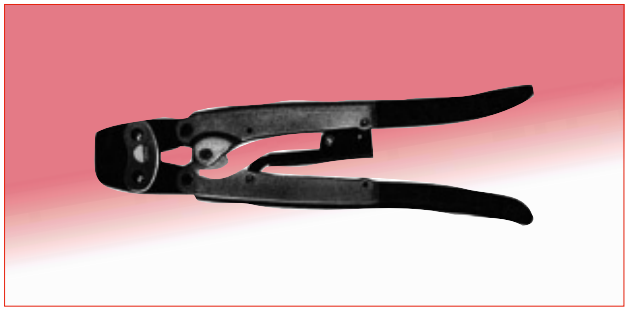

Cable crimping tool (RP34-TC-01)
(The handle shape shown above is a representative example.)

Automatic crimping press (Type CM-105C)

Aug.1.2025 Copyright 2025 HIROSE ELECTRIC CO., LTD. All Rights Reserved.

Type RP34L

■Product Specifications

Ratings	Rated current	5A (when using 18 AWG)	Operating temperature range	−25℃ to +85℃
	Rated voltage	AC30V, DC42V	Storage temperature range	−10℃ to +60℃

Items	Specifications	Conditions
1. Contact resistance	30mΩ max.	Measured at DC 1A
2. Insulation resistance	1,000MΩ min.	Measured at DC 100V
3. Withstanding voltage	No flashover or dielectric breakdown.	AC 150V for 1 minute
4. Vibration proof	No electrical discontinuity 10μs or longer.	10 to 55Hz, half amplitude : 0.75mm, 3 axis directions, 2 hours each
5. Temperature cycle	Insulation resistance : 100MΩ min	-55℃ : 30 minutes → Normal temperature : 10 to 15 minutes → +85℃ : 30 minutes → Normal Temperature : 10 to 15 minutes, 5 cycles
6. Corrosion resistance	No corrosion that affects performance.	Left in 5% salt water solution for 48 hours
7. Mating Cycles	Contact resistance : 60mΩ max	5,000 times

■Materials / Finish

Items		Material	Finish	Remarks
Receptacle— (2position)	Metal fitting	Phosphor bronze	Solder plating	————
	Insulator	Polyamide resin	Black	UL94HB
	Contact	Brass	Palladium plating	————
Plug— (2 position)	Exterior	Vinyl chloride resin	Black	UL94V-0
	Insulator	Polyamide resin		UL94HB
	Contact	Phosphor bronze	Silver plating	————
Receptacle— (3 position)	Metal fitting	Phosphor bronze	Solder plating	————
	Insulator	PPS resin	Black	UL94V-0
	Contact	Brass	Palladium plating	————
Plug— (3 position)	Exterior	Polycarbonate resin	Black	UL94V-0
		Vinyl chloride resin		
	Insulator	PPS resin		
	Contact	Phosphor bronze	Palladium plating	————

■Product Number Structure

Refer to the chart below when determining the product specifications from the product number.
Please select from the product numbers listed in this catalog when placing orders.

RP34L - 5 PA - 2 SC (****)
❶ ❷ ❸ ❹ ❺ ❻

❶Series name : RP34L	❺ Contact type PD : Male contact (dip) SC : Female contact (crimped)
❷Shell : Indicates the shell form.	❻ Cable length : (****) may vary depending on the cable.
❸Type Receptacle : R Straight plug : PA Right-angled plug : LP	
❹Number of contacts : Shows the number. 2 or 3 contacts.	

Aug.1.2025 Copyright 2025 HIROSE ELECTRIC CO., LTD. All Rights Reserved.

■Receptacle

●2 position

RP34L-5R-2PD(71)

●3 position

RP34L-5R-3PD(71)

Part No.	HRS No.
RP34L-5R-2PD(71)	113-5154-6 71
RP34L-5R-3PD(71)	113-5157-4 71

●2 position

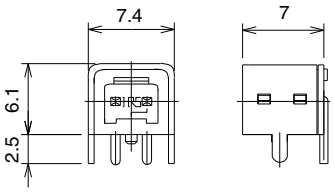

●3 position

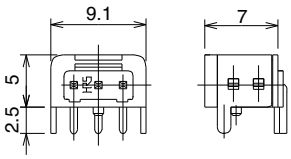

Recommended panel opening dimensions (reference)

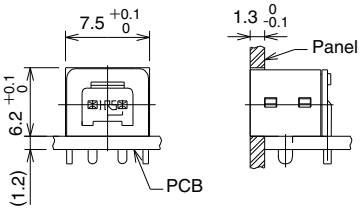

Recommended panel opening dimensions (reference)

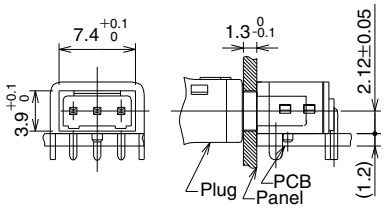

PCB layout dimension

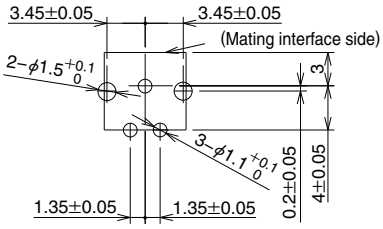

PCB layout mounting dimensions

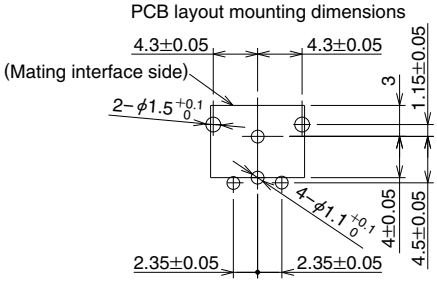

■Plug

RP34L-5PA-2SC(1857)(71)

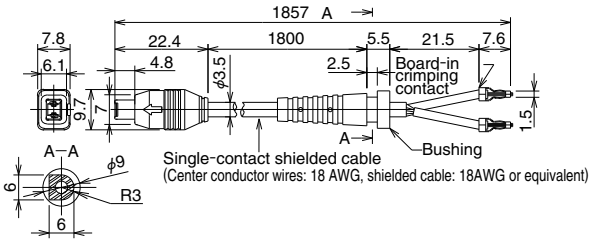

RP34L-5PA-3SC(71)

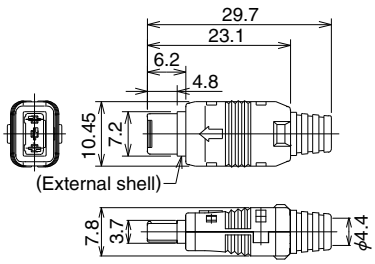

RP34L-5LP-3SC(71)

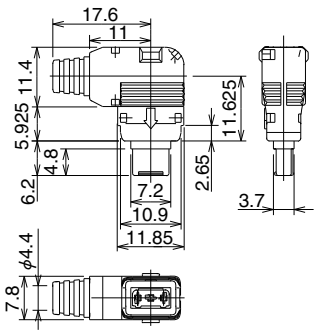

Part No.	HRS No.
RP34L-5PA-2SC(1857)(71)	113-5153-3 71
RP34L-5PA-3SC(71)	113-5178-4 71
RP34L-5LP-3SC(71)	113-5161-1 71

Aug.1.2025 Copyright 2025 HIROSE ELECTRIC CO., LTD. All Rights Reserved.

■Crimp contact

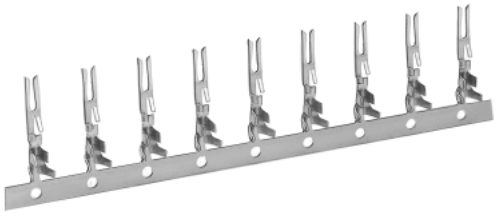

RP34L-SC1-212(01)

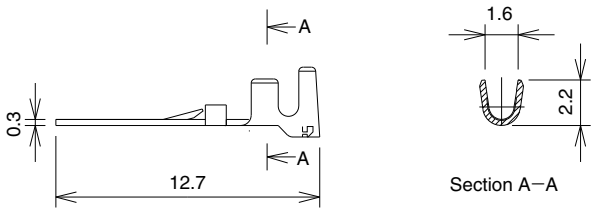

Part No.	HRS No.
RP34L-SC1-212(01)	113-5151-8 01

◆Applicable tools

Type		Part No.	HRS No.	Applicable contact	Applicable cables
Manual crimping tools		HT-102/RP34L-SC1-212	150-0210-8	RP34L-SC1-112(01)	18 to 22 AWG
Machine crimping	Automatic crimping press	CM-105C	901-0001-0	————	————
	Applicator	AP105-RP34L-SC1-212	901-2043-4	RP34L-SC1-212(01)	18 to 22 AWG
Cable crimping tool		RP34-TC-01	150-0074-1	————	ϕ4
Extraction tool		RP6-SC-TP	150-0039-0	————	————

◆Assembly procedure (3 position plug)

●Straight plug

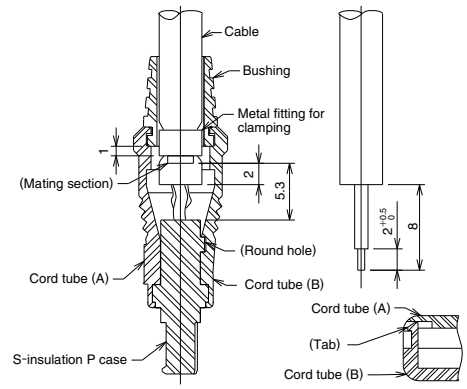

1. First pass the prepared cable through the bushing, and then crimp and terminate the contacts.
2. Assemble the crimped and terminated contacts into the contact holes of the S-insulation P case. At this time, please make sure that the crimped contacts are securely engaged onto the contact holes of the S-insulation P case by lightly pulling the cable. If you find an erroneous wiring, insert the extractor (RP6-SC-TP) from the mating side to pull out the contact from the termination side, and then re-assemble.
3. Crimp the metal fitting for clamping with the applicable tool (RP34-TC-01).
4. Align and assemble the protrusion of the S-insulation P case to the round hole of the cord tube (B).
5. Attach the mating section of the metal fitting for clamping to the recess of the cord tube (B), and then assemble the bushing and metal fitting for clamping onto the cord tube (B).
6. Assemble the cord tube (A) onto the cord tube (B). At this time, please make sure that the four tabs of the cord tube (B) rest on the angled hole of the cord tube (A).

●Right angle

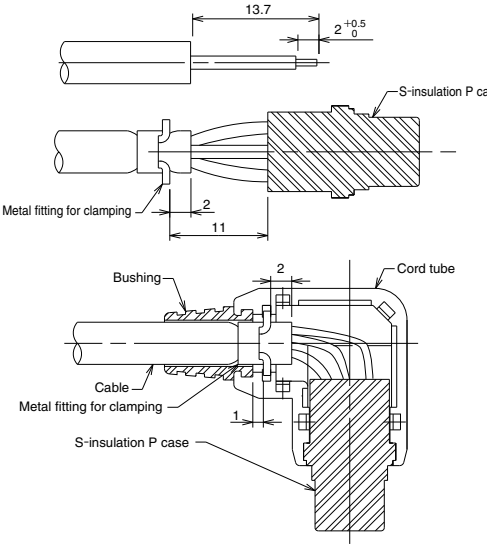

1. Right-angled plugs can be assembled in the same manner as the straight plugs.

Aug.1.2025 Copyright 2025 HIROSE ELECTRIC CO., LTD. All Rights Reserved.

◆Precautions

1. To prevent damage to the connector after mounting, make sure that it is supported with a panel or another substrate. This will prevent any type of excessive load or force on the connector. For 2 position type, please support the external shell of the receptacle. For 3 position type, please support the external shell of the plug.
   See page 3 for details on recommended panel dimensions.

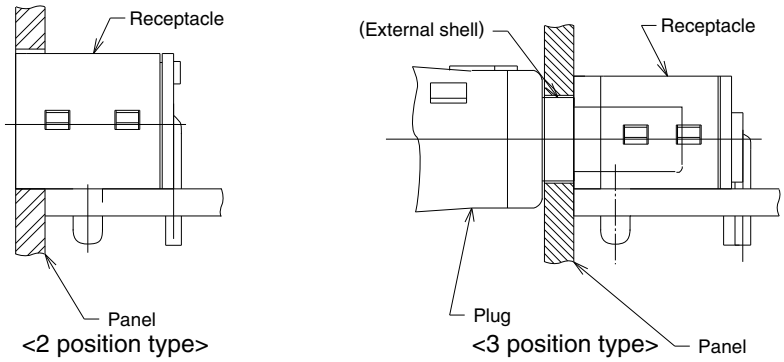

2. When mated together, do not apply a load of 30 N or more on the cable in the direction indicated by the arrows.
   Please note that an excessive tensile stress may break the connectors.

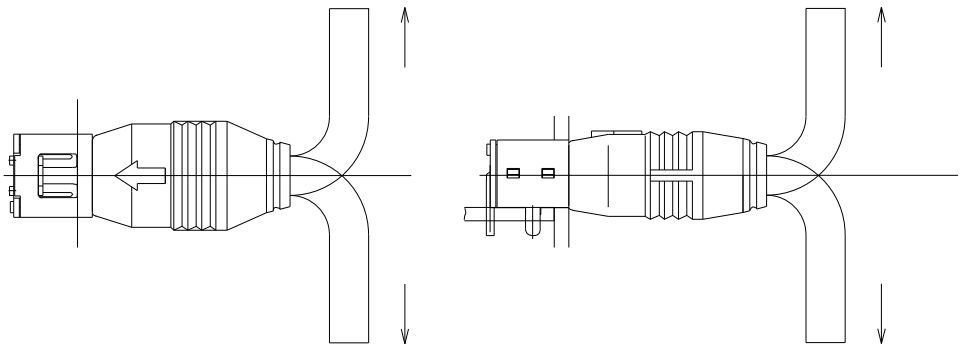

3. This product series uses silver plated contacts. Silver reacts easily to exposure to sulfur gas so the below conditions may cause tarnishing.
   - Dusty environments
   - Area with a high concentration area of gases such as sulfur dioxide gas, hydrogen sulfide gas, nitrogen dioxide gas and so on. Example; In close proximity to factory exhaust, automotive emissions, etc.
   - Close to heaters, or in other areas marked by extreme temperature differences or high humidity.
   - Close to rubber products includes rubber adhesives.

   The Electrical connection is not affected by tarnishing on a silver surface due to the wiping effect of the contact pins.

   Storage
   Packing state; Packed in original packing or equivalent container
   Temperature -10 to +60℃
   Humidity 85% Max
   (It is recommended that the product be stored in an area of normal level of temperature and humidity, and free of any temperature fluctuation)

   Please use this products within 6 months of delivery.
   (After 6 month, please check the solderbility before use)
   “Storage” means long-term storage of the unused products in sealed packaging, prior to assembly to PCB.

Aug.1.2025 Copyright 2025 HIROSE ELECTRIC CO., LTD. All Rights Reserved.

MEMO :

Aug.1.2025 Copyright 2025 HIROSE ELECTRIC CO., LTD. All Rights Reserved.

MEMO :

Aug.1.2025 Copyright 2025 HIROSE ELECTRIC CO., LTD. All Rights Reserved.

USA:
HIROSE ELECTRIC (U.S.A.), INC. HEADQUARTERS CHICAGO OFFICE
2300 Warrenville Road, Suite 150,
Downers Grove, IL 60515
Phone : +1-630-282-6700
http://www.hirose.com/us/

USA:
HIROSE ELECTRIC (U.S.A.), INC. SAN JOSE OFFICE
2841 Junction Ave, Suite 200
San Jose, CA. 95134
Phone : +1-408-253-9640
Fax : +1-408-253-9641
http://www.hirose.com/us/

USA:
HIROSE ELECTRIC (U.S.A.), INC. DETROIT OFFICE (AUTOMOTIVE)
17197 N. Laurel Park Drive, Suite 253,
Livonia, MI 48152
Phone : +1-734-542-9963
Fax : +1-734-542-9964
http://www.hirose.com/us/

USA:
HIROSE ELECTRIC (U.S.A.), INC. BOSTON OFFICE
300 Brickstone Square Suite 201,
Andover, MA 01810
Phone : +1-978-662-5255

THE NETHERLANDS:
HIROSE ELECTRIC EUROPE B.V.
Hogehillweg #8 1101 CC Amsterdam Z-O
Phone : +31-20-6557460
Fax : +31-20-6557469
http://www.hirose.com/eu/

GERMANY:
HIROSE ELECTRIC EUROPE B.V. GERMAN BRANCH
Schoenbergstr. 20, 73760 ostfildern
Phone : +49-711-456002-1
Fax : +49-711-456002-299
http://www.hirose.com/eu/

GERMANY:
HIROSE ELECTRIC EUROPE B.V. NUREMBERG OFFICE
Neumeyerstrasse 22-26, 90411 Nurnberg
Phone : +49-911 32 68 89 63
Fax : +49-911 32 68 89 69
http://www.hirose.com/eu/

GERMANY:
HIROSE ELECTRIC EUROPE B.V. HANOVER OFFICE
Bayernstr. 3, Haus C 30855 Langenhagen, Germany
Phone : +49-511 97 82 61 30
Fax : +49-511 97 82 61 35
http://www.hirose.com/eu/

FRANCE:
HIROSE ELECTRIC EUROPE B.V. PARIS OFFICE
130 Avenue Joseph Kessel, Bat E, 78960
Voisins le Bretonneux, France
Phone : +33-1-85764886
Fax : +33-1-85764823
http://www.hirose.com/eu/

UNITED KINGDOM:
HIROSE ELECTRIC EUROPE BV (UK BRANCH)
4 Newton Court, Kelvin Drive, Knowlhill,
Milton Keynes, MK5 8NH
Phone : +44-1908 202050
Fax : +44-1908 202058
http://www.hirose.com/eu/

CHINA:
HIROSE ELECTRIC (CHINA) CO., LTD. (SHANGHAI, HEADQUARTERS)
18, Enterprise Center Tower 2, 209# Gong He Road, Jing'an District, Shanghai, CHINA 200070
Phone : +86-21-6391-3355
Fax : +86-21-6391-3335
http://www.hirose.com/cn/

CHINA:
HIROSE ELECTRIC (CHINA) CO.,LTD. BEIJING BRANCH
A1001, Ocean International Center, Building 56# East 4th Ring Middle Road, ChaoYang District, Beijing, 100025
Phone : +86-10-5165-9332
Fax : +86-10-5908-1381
http://www.hirose.com/cn/

CHINA:
HIROSE ELECTRIC (CHINA) CO., LTD. SHENZHEN BRANCH
Room 09-13, 19/F, Office Tower Shun Hing Square, Di Wang Commercial Centre, 5002 Shen Nan Dong Road, Shenzhen City, Guangdong Province, 518008
Phone : +86-755-8207-0851
Fax : +86-755-8207-0873
http://www.hirose.com/cn/

HONG KONG:
HIROSE ELECTRIC HONGKONG TRADING CO., LTD.
Room 1001, West Wing, Tsim Sha Tsui Centre, 66 Mody Road, Tsim Sha Tsui East, Kowloon, Hong Kong
Phone : +852-2803-5338
Fax : +852-2591-6560
http://www.hirose.com/hk/

TAIWAN:
HIROSE ELECTRIC TAIWAN CO., LTD.
103 8F, No.87, Zhengzhou Rd., Taipei
Phone : +886-2-2555-7377
Fax : +886-2-2555-7355
http://www.hirose.com/tw/

KOREA:
HIROSE KOREA CO.,LTD.
143, Gongdan 1-daero, Siheung-si,
Gyeonggi-do, 15084, Korea
Phone : +82-31-496-7000
Fax : +82-31-496-7100
http://www.hirose.co.kr/

SINGAPORE:
HIROSE ELECTRIC SINGAPORE PTE. LTD.
03, Anson Road, #20-01, Springleaf Tower, Singapore 079909
Phone : +65-6324-6113
Fax : +65-6324-6123
http://www.hirose.com/sg/

INDIA:
HIROSE ELECTRIC SINGAPORE PTE. LTD. DELHI LIAISON OFFICE
Office NO.552, Regus-Green Boulevard, Level5, Tower C, Sec62, Plot B-9A, Block B, Noida, 201301, Uttar Pradesh, India
Phone : +91-12-660-8018
Fax : +91-120-4804949
http://www.hirose.com/sg/

INDIA:
HIROSE ELECTRIC SINGAPORE PTE. LTD. BANGALORE LIAISON OFFICE
Unit No-403, 4th Floor, No-84, Barton Centre, Mahatma Gandhi (MG) Road, Bangalore 560 001, Karnataka, India
Phone : +91-80-4120 1907
Fax : +91-80-4120 9908
http://www.hirose.com/sg/

MALAYSIA:
PENANG REPRESENTATIVE OFFICE
73-3-1, Ideal@The One, Jalan Mahsuri, Bayan Lepas Penang, 11950, Malaysia
Phone : +604-648-5536
http://www.hirose.com/sg/

THAILAND:
BANGKOK OFFICE (REPRESENTATIVE OFFICE)
Unit 4703, 47th FL., 1 Empire Tower, South Sathorn Road, Yannawa, Sathorn, Bangkok 10120 Thailand
Phone : +66-2-686-1255
Fax : +66-2-686-3433
http://www.hirose.com/sg/

Creative Links to World Electronics ®

HRS

HIROSE ELECTRIC CO.,LTD.
2-6-3,Nakagawa Chuoh,Tsuzuki-Ku,Yokohama-Shi 224-8540,JAPAN
TEL: +81-45-620-3526 Fax: +81-45-591-3726
http://www.hirose.com
http://www.hirose-connectors.com

Aug.1.2025 Copyright 2025 HIROSE ELECTRIC CO., LTD. All Rights Reserved.

HRS The characteristics and the specifications contained herein are for reference purpose. Please refer to the latest customer drawings prior to use.
The contents of this catalog are current as of date of 11/2018. Contents are subject to change without notice for the purpose of improvements.