1217127-1 ✔ ACTIVE

FASTON | FASTON 250

TE Internal #: 1217127-1

Tab PCB Terminal, 6.35 mm [.25 in] Tab Width, 1.4 mm [.055 in] PCB Hole, Through Hole - Solder, Tin Plating, Reel, FASTON 250

View on TE.com >

Terminals & Splices > PCB Terminals

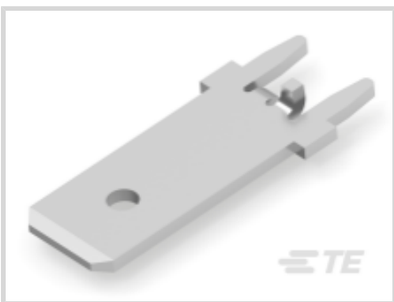

PCB Terminal Type: **Tab**

PCB Thickness (Recommended): **1.57 mm [.062 in]**

Mating Tab Width: **6.35 mm [.25 in]**

Mating Tab Thickness: **.81 mm [.032 in]**

PCB Hole Diameter: **1.4 mm [.055 in]**

Features

Contact Features

PCB Contact Termination Area Plating Material Thickness	3.81 µm[150 µin]
Contact Underplating Material Thickness	2.54 µm[100 µin]
Contact Mating Area Plating Material Thickness	3.81 µm[150 µin]
PCB Terminal Type	Tab
Mating Tab Width	6.35 mm[.25 in]
Mating Tab Thickness	.81 mm[.032 in]
Terminal Plating Material	Tin
Contact Underplating Material	Brass
Terminal Size	6.35
Terminal Orientation	Straight

Termination Features

Termination Method to PCB	Through Hole - Solder
Product Terminates To	Printed Circuit Board

Mechanical Attachment

Wire Insulation Support	With

Dimensions

Extension Below Board	3.81 mm[.15 in]
Terminal Material Thickness	.81 mm[.032 in]
PCB Thickness (Recommended)	1.57 mm[.062 in]
PCB Hole Diameter	1.4 mm[.055 in]
Profile Height from PCB	16 mm[.637 in]

Usage Conditions

Insulation Option	Uninsulated
Operating Temperature Range	-30 – 110 °C[-22 – 230 °F]

Packaging Features

Packaging Quantity	10000
Packaging Method	Reel

Product Compliance

For compliance documentation, visit the product page on TE.com>

EU RoHS Directive 2011/65/EU	Compliant
EU ELV Directive 2000/53/EC	Compliant
China RoHS 2 Directive MIIT Order No 32, 2016	No Restricted Materials Above Threshold
EU REACH Regulation (EC) No. 1907/2006	Current ECHA Candidate List: JUNE 2025 (250) Candidate List Declared Against: JUNE 2025 (250) Does not contain REACH SVHC
Halogen Content	Low Halogen - Br, Cl, F < 900 ppm per homogenous material. Also BFR/CFR/PVC Free
Solder Process Capability	Wave solder capable to 265°C

Product Compliance Disclaimer

This information is provided based on reasonable inquiry of our suppliers and represents our current actual knowledge based on the information they provided. This information is subject to change. The part numbers that TE has identified as EU RoHS compliant have a maximum concentration of 0.1% by weight in homogenous materials for lead, hexavalent chromium, mercury, PBB, PBDE, DBP, BBP, DEHP, DIBP, and 0.01% for cadmium, or qualify for an exemption to these limits as defined in the Annexes of Directive 2011/65/EU (RoHS2). Finished electrical and electronic equipment products will be CE marked as required by Directive 2011/65/EU. Components may not be CE marked. Additionally, the part numbers that TE has identified as EU ELV compliant have a maximum concentration of 0.1% by weight in homogenous materials for lead, hexavalent chromium, and mercury, and 0.01% for cadmium, or qualify for an exemption to these limits as defined in the Annexes of Directive 2000/53/EC (ELV). Regarding the REACH Regulation, the information TE provides on SVHC in articles for this part number is based on the latest European Chemicals Agency (ECHA) 'Guidance on

requirements for substances in articles' posted at this URL: https://echa.europa.eu/guidance-documents/guidance-on-reach

Compatible Parts

TE Part # 1217155-1
250 FASTON,PCB TAB, TCBR

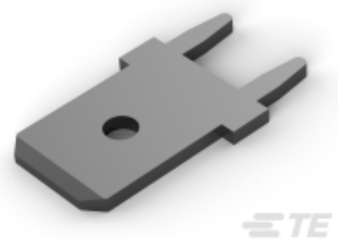

TE Part # 1217566-2
250 FASTON,PCB TAB,TCBR

TE Part # 1742303-2
250 FASTON,PCB TAB,TNBR

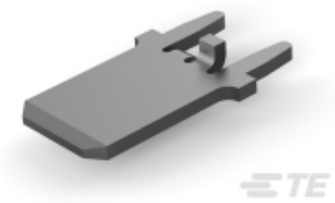

TE Part # 1217861-1
250 FASTON,PCB TAB,TCBR

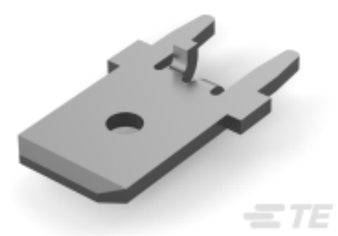

TE Part # 63824-1
250 FASTON TAB TPBR

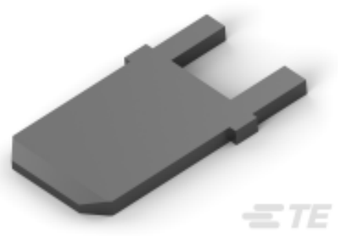

TE Part # 62650-1
250 FASTON TAB TPBR

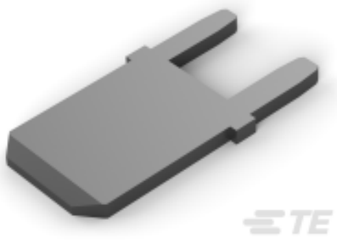

TE Part # 63650-1
250 FASTON TAB TPBR

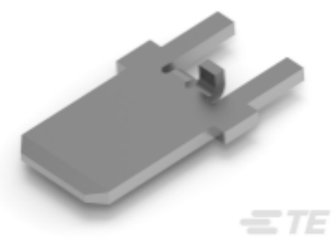

TE Part # 63862-2
250 FASTON TAB TPBR

TE Part # 1217539-1
250 FASTON,PCB TAB,TCBR

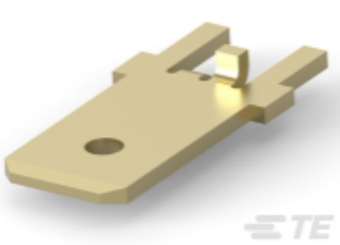

TE Part # 1217126-2
250 FASTON,PCB TAB,TPBR

TE Part # 1217154-1
250 FASTON,PCB TAB,TCBR

TE Part # 1217124-3
187 FASTON,PCB TAB,TNBR

TE Part # 63839-1
250 FASTON TAB TPBR

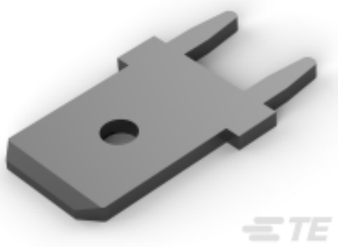

TE Part # 1217566-1
250 FASTON,PCB TAB,TCBR

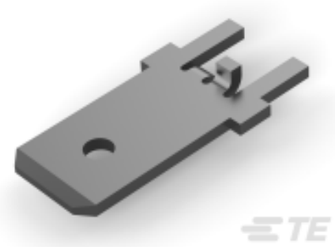

TE Part # 1217126-1
250 FASTON,PCB TAB,TPBR

TE Part # 1217861-2
250 FASTON,PCB TAB,TCBR

TE Part # 1217133-1
187 FASTON,PCB TAB,TNBR

TE Part # 1217136-1
250 FASTON,PCB TAB,TNBR

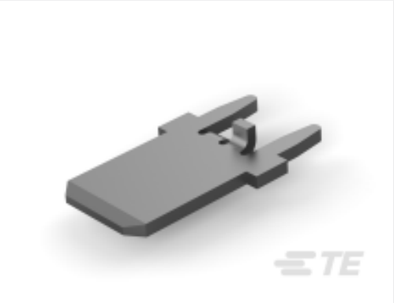

TE Part # 63862-1
250 FASTON TAB TPBR

TE Part # 63066-1
250 FASTON TAB TPBR

Also in the Series | FASTON 250

Compression Connectors(4)

Crimp Terminal Housings(115)

Insertion & Extraction Tools(6)

Insulation Boots & Sleeves(16)

Magnet Wire Terminals(1)

PCB Terminals(133)

Quick Disconnects(418)

Splices(4)

Customers Also Bought

TE Part #11027162-00
DT2-052K W/TH LEADS/RIVET

TE Part #801071-SF
EV35-5.0-02-3M6

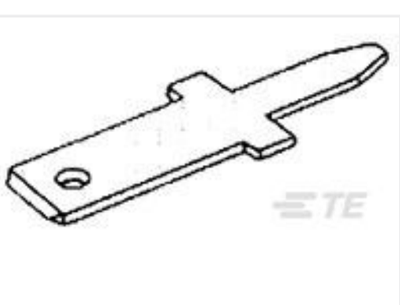

TE Part #63756-1
110 FASTON TAB TPBR

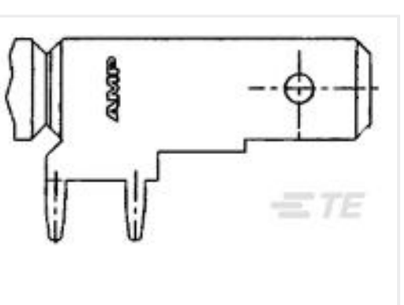

TE Part #63951-1
250 FASTON TAB TPBR

TE Part #796741-3
3 POS PCB MT 9.52MM HI CRT TBK

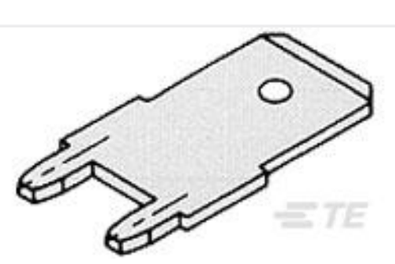

TE Part #1217056-1
250 FASTON,PCB TAB,TPBR

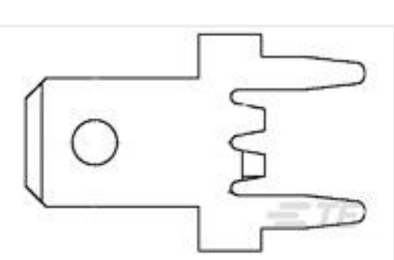

TE Part #1217124-1
187 FASTON,PCB TAB,TNBR

TE Part #1879355-9
RR03 5% 9K1 AMMO

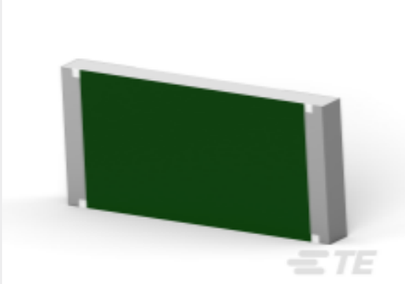

TE Part #7-2176403-5
3550 1K2 1%

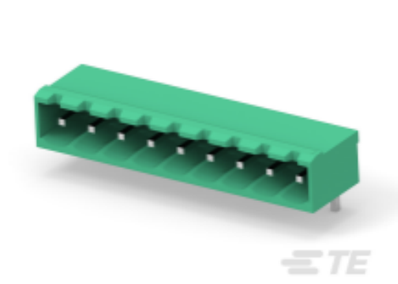

TE Part #2350513-9
9POS TB HDR 90 DEG, PITCH 5.0 & TL 4.5mm

Documents

Product Drawings

250 FASTON,PCB TAB,TPBR

English

CAD Files

3D PDF

3D

Customer View Model

ENG_CVM_CVM_1217127-1_E.2d_dxf.zip

English

Customer View Model

ENG_CVM_CVM_1217127-1_E.3d_igs.zip

English

Customer View Model

ENG_CVM_CVM_1217127-1_E.3d_stp.zip

English

By downloading the CAD file I accept and agree to the Terms and Conditions of use.

Datasheets & Catalog Pages

FASTON PCB Tabs and Receptacles

English

PRINTED CIRCUIT BOARD TERMINALS AND DISCONNECTS

English

Product Specifications

Application Specification

English

Agency Approvals

CSA Certificate

English

CSA Certificate

English